Wichita Foundation, Basement and Slab-on-grade Standards
for ONE and TWO FAMILY DWELLINGS

Prepared for The City of Wichita, Kansas

Table of Contents — Sheet Index

Ref. Sym. TITLE PAGE AND FOUNDATION INDEX — PAGE 0.0

GENERAL NOTES: — PAGE 0.1
General notes for all details are located on this page keyed by a number designation, inside a hexagon symbol.

SOIL AND BACKFILL MATERIAL STANDARDS: — PAGE 0.2
Soil and Backfill notes for all details are located on this page keyed by a letter designation, inside a square symbol.

COMMON NOTES and FOUNDATION STANDARDS: — PAGE 0.2 & 0.3
General notes for all details are located on this page keyed by a letter & number designation, inside a triangle symbol.

FOUNDATION TYPE 1.0, Mono Pour Foundation & Slab: — PAGE 1.0
1.0 General MONO-POUR assembly standards.

FOUNDATION TYPE 2.0 Grade Beam & Slab: — PAGE 2.0
2.0 General GRADE BEAM & SLAB assembly standards.

FOUNDATION TYPE 3.0 Footing, Stem Wall & Slab: — PAGE 3.0
3.0 General FOOTING, STEM WALL & SLAB assembly standards.

FOUNDATION TYPE 3.1 Garage Frost Wall & Slab: — PAGE 3.1
3.1 Foundation for Garage Slab and Stem Wall

FOUNDATION TYPE 4.0 Basement Foundation: — PAGE 4.0
4.0 General BASEMENT assembly standards.

FOUNDATION TYPE 3.0 Walk-out Basement Slab Edges: — PAGE 3.0
BASEMENT SLAB EDGES & FOUNDATIONS at WALK-OUT PERIMETERS shall be constructed using Detail 1, Type 3.0a Stem Wall & Slab construction assembly criteria located on Page 3.0 of these standards)

FOUNDATION TYPE 5.0 Other Foundation Assemblies: — PAGE 5.0
5.0 General FOOTING AND STEM WALL for CRAWL SPACE

FOUNDATION SECTION & DETAIL STANDARDS: — PAGES 6.0 - 6.2
6.0 Supplemental and Alternative Details.

FOUNDATION & SLAB SITE CONDITIONS: — PAGE 7.0
This section addressed environmental impacts on foundation, slab placement and long term performance.

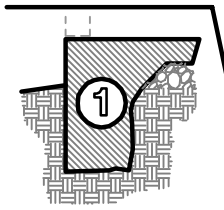

TYPE 1.0

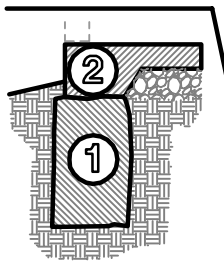

TYPE 2.0

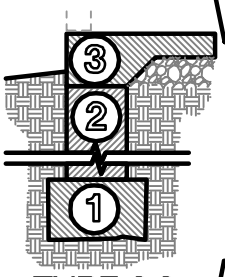

TYPE 3.0

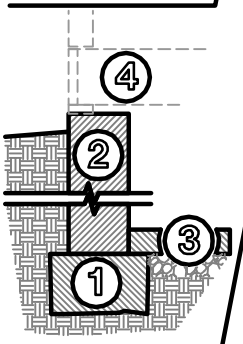

TYPE 4.0

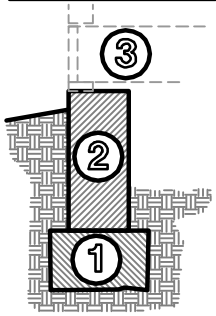

TYPE 5.0

IMPORTANT NOTE: Details in this reference material are not to scale. They are intended to represent general construction assemblies for the purpose of identifying minimum construction standards. As such, the contractor must evaluate each project and circumstance applying higher performance, as may be required, to insure that both the safety and quality of the final product reflects and promotes the integrity of the construction industry.

REV 11/22/11

General Notes & Soil Standards

Project Inspection & Submittal Requirements

SITE & PROJECT STANDARDS:

01 STATEMENT OF PURPOSE

These guidelines for residential construction of concrete foundations and slabs represent minimum, code compliant, and recommended design standards. These standards include new construction and addititions to existing structures. These standards do not apply to non-inhabitable, detached, structures. All attached structures (including garages) must follow these guidelines. It is always the responsibility of the contractor to evaluate the scope and circumstances of each project and retain professional advise on any areas of concern including foundation and slab design.

02 Slab-on-grade PROJECT SOIL ANALYSIS:

GENERAL MAKEUP OF EXISTING SITE SOILS: Native soil type and characteristics requires two (2) physical samples for testing. Each soil sample shall be approximately 8oz to 12oz sealed in a zip-lock plastic bag. Sample material shall be taken from 12" to 18" below grade of habitable living areas at diagonal corners within footprint of proposed structure or addition. Plasticity index (PI) report from soils engineer is required with permitting request. This PI report establishes the minimum required depth of footings below finish grade and will be attached to the permit application. (Important note: Soil sampling is not required for basement construction, walk-out basement construction or non-habitable structures and spaces such as garages, non-heated sheds, etc.)

03 PLASTICITY INDEX AND FOOTING DEPTH

THE IMPACT OF A SOILS PLASTICITY INDEX (PI) ON FOUNDATIONS: Native soil type and characteristics impact the performance of foundations. These variations in the soil effect frost depth, expansiveness, movement and are generally set in motion as a result of the amount of moisture these soil types are subjected to. Variations of moisture levels can cause dramatic soil movement capable of damaging even well designed foundation systems. These design standards are intended to generally address the various soil types present in the Wichita / Sedgwick County geographical region. Refer to sheet 7.0.

04 SITE & FOUNDATION MOISTURE

THE CONTROL OF SURFACE DRAINAGE IS CRITICAL IN MINIMIZING THE POTENTIAL FOR FOUNDATION DAMAGE AS A RESULT OF MOISTURE: Proper building site pad elevation and strict adherence to the overall sub-division development drainage plan is mandatory. In the absence of such an engineered drainage plan it is recommended that professional input on building site development be retained. While many uncontrollable environmental factors influence soil (con't top) (con't) conditions including weather, vegetation and exposure, poorly sited buildings with poor drainage plans are most susceptible to water & foundation damage.

05 OWNER EDUCATION ON MAINTENANCE:

OWNERSHIP OF PROPERTIES REQUIRES UPKEEP AND MAINTENANCE: It is natural for soil materials at the perimeter of a building to settle over time. This settlement is ongoing and takes place over many years. In much the same up-keep sequence as painting, owners of properties should accept the fact that additional soil material will be required to maintain proper surface drainage. Good drainage away for the building perimeter, including downspout and sump pump extensions will minimize the threat of foundation problems resulting from water trapped against the slab or basement wall edges.

06 SITE CONDITIONS FOR PLACEMENT:

REFERENCE SHEET 7.0:
Soil "b" material acts as both a leveling element for the slab and as a buffer against the movement characteristics of Soil "a". Increasing the depth of Soil "b" with increased PI rating of below grade soils is ALWAYS recommended. Consult a professional if PI soil materials above 45 or if site conditions suggest questionable or inconsistant bearing performance circumstances.

07 FIBER REINFORCING:

Fiber materials are intended as a shrinkage and non-structural cracking control additive. These materials do not replace the requirements for steel reinforcing wire fabric materials or reinforcing bar, etc. Consult a Kansas design professional for recommendations on appropriate fiber material performance.

08 TECHNICAL INSTALLATION STANDARDS:

The contractor assumes responsibility for construction techniques, methods, standards and solutions implemented under his direction. He further assumes responsibility for recognizing and building in accordance with adopted codes, standards and guidelines as well as following the plans and specific recommendations of professionally prepared documents and specifications, if any, for a specific project. If criteria is found to be in conflict, use the more stringent standard or consult a Kansas design professional.

09 CONCRETE INSPECTIONS:

SLAB-ON-GRADE construction:
1) Footing: Trench, String-line perimeter & bearing;
2) Pre-Slab Pour: Sub-Grade, Grade Stakes, Reinforcing.
BASEMENT construction::
1) Footing: Footing & Rebar;
2) Wall: Sub-Grade, Grade Stakes, Reinforcing, Utilities;
3) Floor: Basement & Garage.
See City & County for detailed information & requirements.

Common Notes & Foundation Standards

Reference foundation drawings

SOIL & BACKFILL MATERIAL STANDARDS:

Soil a EXISTING SITE SOILS: See General note 02, for required analysis of local existing, native soil. This analysis is required in order to establish PI index which determines minimum required depth foundation assembly below finished grade.

Soil b BELOW SLAB FILL MATERIAL: COMPACTED Sand, Pea Gravel, or other approved Stabilizing Materials (i.e. AB3, etc). Compacted substraight materials do not require testing, however, it is considered normal practice to insure that any substrate material is properly prepared for the next stage of construction. Failure to compact base materials can undermine bearing capacity, effect concrete performance, finishing and result in undesirable cosmetic or structrual flaws.

Soil c FINISH GRADE MATERIAL: Topsoil. See Common note D2 for required slope away from foundation perimeter and Common note B3 for required dimension below top of concrete wall or finished slab elevation.

Soil d FOUNDATION BACKFILL MATERIAL: Backfill with loose, uniform soil preferably slightly damp. Use only material that is free from organic material, debris and large clumps (6" max.). Fill perimeter uniformly in lifts of 24" maximum. If additional soil materials from off site are required, soil shall be of same makeup as local material, Soil Type "a".

Soil e FOUNDATION FILL MATERIAL AT FOOTING DRAINAGE MATERIAL: Coarse washed sand or washed river rock. Do not use fine sand fill material on exterior drainage tile.

COMMON NOTES FOR FOUNDATION STANDARDS:

A1 Footings shall be continuous on all sides of structure with bearing in minimum 1500 psf undisturbed soil or a controlled and tested fill.

A2 Do not place patio or driveway slabs on the fill next to ANY wall unless supported either on supporting ledges, on dowels or by supporting columns carried down to the adjacent footings bottom.

A3 Ufer ground shall be installed in all structural footings. Contact inspection department for criteria for proper installation.

B1 Do not backfill an unsupported straight run of wall over 16' in length (Measured between corners and cross walls or supporting buttresses) unless adequate bracing is provided or the floor framing has been set in place and anchor bolts tightened. Reference details D1 & D2, sht 6.1.

B2 Backfill only against sufficiently reinforced and cured concrete. No heavy wheel loading adjacent to the wall shall be allowed. Basement walls are NOT designed as retaining walls, reference details A2, sht 6.0 for laterally unsupported wall design criteria.

B3 There shall be a minimum dimension from finished grade to top of concrete foundation or slab of 6" minimum. If sod is to be installed adjacent the foundation, this dimension shall be 8" minimum to allow for depth of sod material.

B4 Surround the drain tiles with 12" min., both depth & width, of coarse washed sands (Road gravel). Crushed limestone is not acceptable. All drain tile shall be 3" or 4" and covered with sock or filter cloth. See Soil Type "e".

B5 Excavated soil material shall not be used as fill below concrete slabs including garage slabs unless properly placed, and tested for bearing performance. Imported material used for fill below any slab shall be of soil type B or as specified by a licensed professional consultant. All fill shall be distributed below concrete slabs in layers, filling all voids, with each properly compacted in sequence.

B6 Vegetation and organic top soil material shall be completely removed from building site areas to receive concrete slab and foundation assemblies. Do not place below slab fill and preparation materials over organic materials.

C1 All concrete shall have a minimum 28 days compressive strength of 3500 psi for exterior slabs and 3000 psi for interior slabs, walls and footings.

C2 Concrete shall have a 5" maximum slump at the end of the chute or an 8" maximum slump if a high range water reducer is added.

D1 Exterior and Interior drain tiles shall be continuous around footings placed as illustrated with silt protective "sock". Interior and exterior systems shall be independent with no connection. Interior and Exterior systems may discharge into same sump pump pit or gravity flow to exterior discharge. Insure that the discharge location provides for positive drainage away from foundation edge. Mechanically pumped discharge should include pipe or solid trough that carries drain-water past the original basement over-dig or 5' whichever is greater. (Ref Detail E2/6.1 for secondary sump installation option.)

(COMMON NOTES CONTINUED ON PAGE 0.3)

COMMON NOTES FOR FOUNDATIONS:

(COMMON NOTES CONTINUED FROM PAGE 0.2)

D2 To assure adequate drainage away from the foundation, grade away from the foundation shall slope at a recommended rate of 1" per ft. for 6 ft. minimum. Positive drainage shall then be maintained beyond in accordance with the development drainage plan. All drainage shall be maintained at a ¼" per ft. minimum. Use of soil type "c", organic top soil, is limited to 4" within 6' of perimeter to insure a positve drainage "cap" of native material below. Backfill below the topsoil layer, whether on-site or imported, materials, shall be consistant in make-up to existing local soil materials generally equal to Soil Type "a".

D3 Site irrigation systems adjacent foundations present a substancial source for the introduction of moisture into expansive sub-soils and resulting damage. Systems should be routinely balanced, inspected and maintained to limit and control this risk.

D4 Underslab utilites shall be installed with at least a 4" cover of compacted sand material between the bottom of the slab and top of ulility line.

E1 Basement walls above 9'-0" in height, measured from top of footing to top of concrete wall shall be designed and sealed by a Kansas design professional.

E2 Foundation LOADING LEVEL DEFINITIONS include maximum span and tributary loading limits as defined in the graphics below. Spans or loading conditions in excess of these "LEVELS" shall be reviewed by a licensed Kansas design professional.

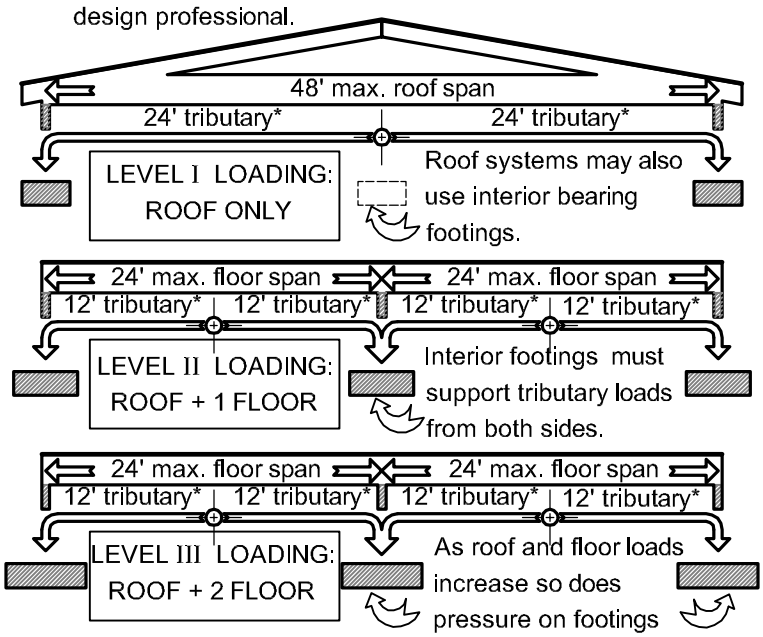

*Tributary loading is half the span and is used to calculate the total load distributed to the foundation from bearing walls & beams.

F1 Seal tie holes and cracks with fiber sealant before dampproofing.

F2 One coat dampproofing minimum shall be applied in soils with PI of 15 and below and two coats, or equivalent shall be applied in in all soil types with PI above 15. Waterproofing material shall extend from top of wall to base of wall and horizontally on top of footing to seal joint a wall base.

R1 All horizontal bars shall lap a minimum of 18" at ends, splices, and around corners.

R2 Set anchor bolts at the spacing shown on the wall sections in attached drawing, preferably set by templates secured to the forms before concrete is placed, to assure proper placement.

R3 The placement of vertical and horizontal steel shall be in accordance with specific foundation type standards documented in these standards. Reference foundation type.

R4 Reinforcing mesh shall overlap a minimum of 6" and shall extend to within 3" of perimeter edge of concrete. The use of proper positioning devices for slab reinforcing (mesh or rebar) is encouraged, however, pulling reinforcing, where applicable, to the proper final location is acceptable.

R5 Where slab construction in poured adjacent foundation walls forming an unsupported "floating slab" (Similar to Det F1/6.2), ½" min. diameter reinforcing bars, 16" min. in length spaced at 32" max o.c., shall be drilled a minimum of 4" into perimeter bearing wall and extend into the center of the adjacent slab. Thicken edge of slab as required for 1½" coverage of rebar top and bottom. Rebar material may be smooth.

T1 The IRC/IECC-2006 requires minimum insulation performance at various elements of exterior construction assemblies. Foundation and Slab Insulation standards are included. Locally, energy standards are not officially inspected, however, Kansas Law *(KSA 66-1228)* requires that builder's must disclose to buyers the amount of insulation they installed beside the minimum value required by code on the Kansas Energy Efficiency Disclosure form. Energy Star ® requires insulation on all foundation types including slab-on-grade in our zone. If no insulation is installed as per the standard, a zero must be disclosed. The following table shows insulation values for the various types of foundations:

TABLE A - FOUNDATION INSULATION STANDARDS		
Kansas Zone 4 Climate (Sedgwick County & Surrounding Areas)		
Construction Type	Continuous	or Framing
* Foundation Insulation	R-10	R-13
Crawl Space Insulation	R-10	R-13
Slab Insulation	R-10 to a min 24" depth	

* See Detail E1/6.1 for basement foundation insulation options

T2 To meet the long term insulation value required by IRC/IECC-2006, exposed R10 insulation at foundation and slab edges should be protected from damage during the construction process and then flashed or otherwise finished at the completion of the project to protect against deterioration.

Mono Pour Foundation Type

Construction Standards

FOUNDATION TYPE 1.0 DETAIL NOTES:

(1a) Fndn Type 1.0 / Mono Pour Foundation type.

(2) For all note "2" dimensionsal standards (a thru d), reference the table on this page:

(3) Reference Soil & Backfill standards for these material types:
Soil a | Soil b | Soil c

(4) Reference specifically these Common Notes for type 1.0 fndn:
A1 thru A3 · B3 thru B6 · C1 · C2 · D2 thru D4 · R1 thru R5 · T1 · T2

(5) Steel Reinforcing and anchoring standards:
a) 3- #4 horizontal continuous at PI<16, 4- #4 at PI 16+.
b) #4 vertical @ 30" o.c. max. centers, center in footing. (Hook 24" into slab)
c) Anchor Bolts, see note 7.
d) Slab reinforcement: 6x6-w1.4 x w1.4 WWF (6x6 - 10x10 mesh), center in slab.
e) Slab reinforcement: 6x6-w2.9 x w2.9 WWF in sheets (6x6 - 6x6 mesh), center in slab.
f) Slab reinforcement: #4 @ 24" o.c. each way, center in slab or approved post tensioning system.

(6) All foundations must extend 12" min. into undisturbed soil free of vegetation or into engineered controlled fill materials. Foundations or grade beams may also be supported on concrete piers extending into deeper bearing material. These systems to be designed and sealed by a Kansas design professional.

(7) Min. 2x4 PL w/ ½" dia. anchor embedded 7" into wall at 48" o.c. max. with washer & nut. One anchor within 12" of each end & splices. Optional anchors shall be designed and sealed by a Kansas design professional.

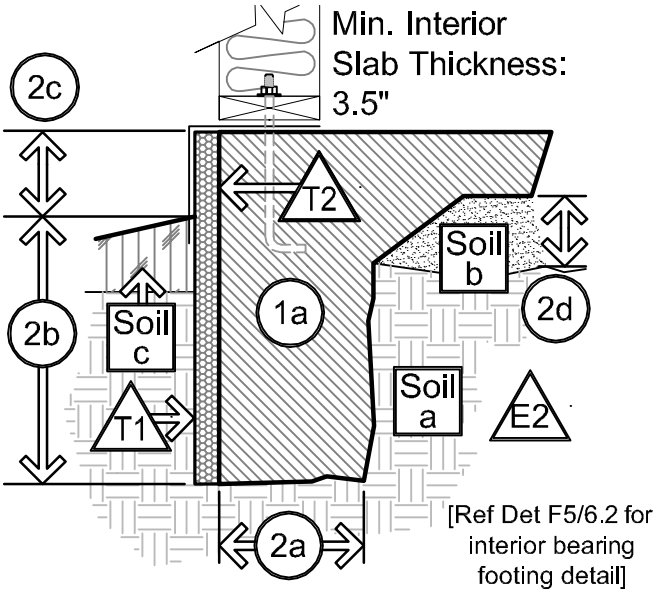

Dimension and Reinforcing Requirement Table / Type 1.0					
Soil Type a	(2a)	(2b)	(2c)	(2d)	Reinforcing
Sandy/Silts PI <16	See note below for min. widths	30" min.	6" min. above finish grade	4" min.	Ref detail #1 below
Sandy Clay/Clay PI 16 to 30		36" min.		4" min.	Ref detail #2 below
Lean/Fat Clay PI 31 to 45		42" min.		6" min.	Ref detail #3 below

Consult a Kansas design professional where PI > 45.

Note on foundation widths: Level I loading = 8"; Level II loading = 12"; Level III loading = 16"; Add 4" to all min dimensions with addition of brick ledge. (Reference common note E2/Sht 0.3 for Load Level Definitions.)

Detail 1 / Type 1.0a

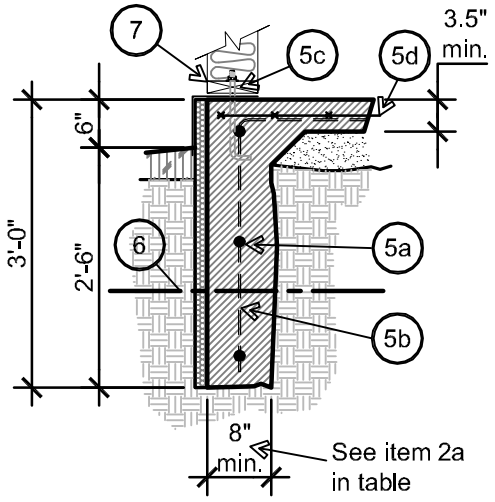

Type 1.0 / Mono Pour in PI<16 soil

Detail 2 / Type 1.0b

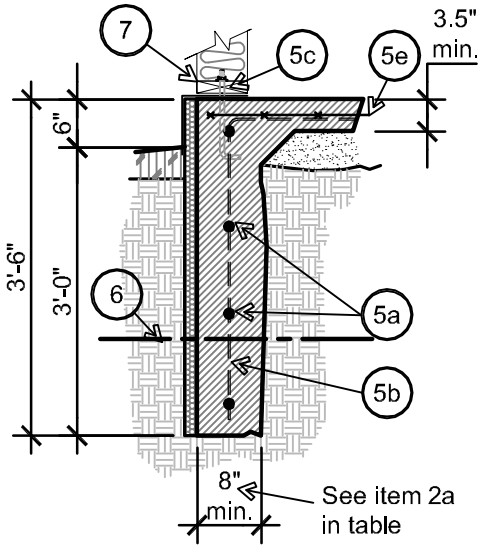

Type 1.0 / Mono Pour in PI 16 to 30 soil

Detail 3 / Type 1.0c

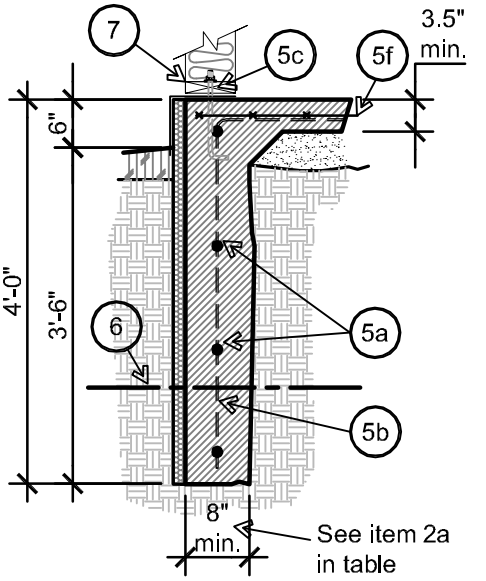

Type 1.0 / Mono Pour in PI 31 to 45 soil

Grade Beam Foundation Type

Construction Standards

FOUNDATION TYPE 2.0 DETAIL NOTES:

1a Fndn Type 2.0 / Grade Beam (Trench) & Slab placement.

1b 8" thickened edge slab.

2 For all note "2" dimensionsal standards (a thru g), reference the table on this page:

3 Reference Soil & Backfill standards for these material types:
Soil a | Soil b | Soil c

4 Reference specifically these Common Notes for type 2 fndn:
A1 thru A3 · B3 · C1 · C2 · D2 thru D4 · R1 thru R5 · T1 · T2

5 Steel Reinforcing and anchoring standards:
a) 3- #4 horizontal continuous at PI<16, 4- #4 at PI 16+.
b) #4 vertical @ 30" o.c. max. centers, centered in footing. (Hook 24" into slab)
c) Anchor Bolts, see note 7.
d) Slab reinforcement: 6x6-w1.4 x w1.4 WWF (6x6 - 10x10 mesh), center in slab.
e) Slab reinforcement: 6x6-w2.9 x w2.9 WWF in sheets (6x6 - 6x6 mesh), center in slab.
f) Slab reinforcement: #4 @ 24" o.c. each way, center in slab or approved post tensioning system.

6 All foundations must extend 12" min. into undisturbed soil free of vegetation or into engineered controlled fill materials. Foundations or grade beams may also be supported on concrete piers extending into deeper bearing material. These systems shall be designed and sealed by a Kansas design professional.

7 Min. 2x4 PL w/ ½" dia. anchor embedded 7" into wall at 48" o.c. max. with washer & nut. One anchor within 12" of each end & splices. Optional anchors shall be designed and sealed by a Kansas design professional.

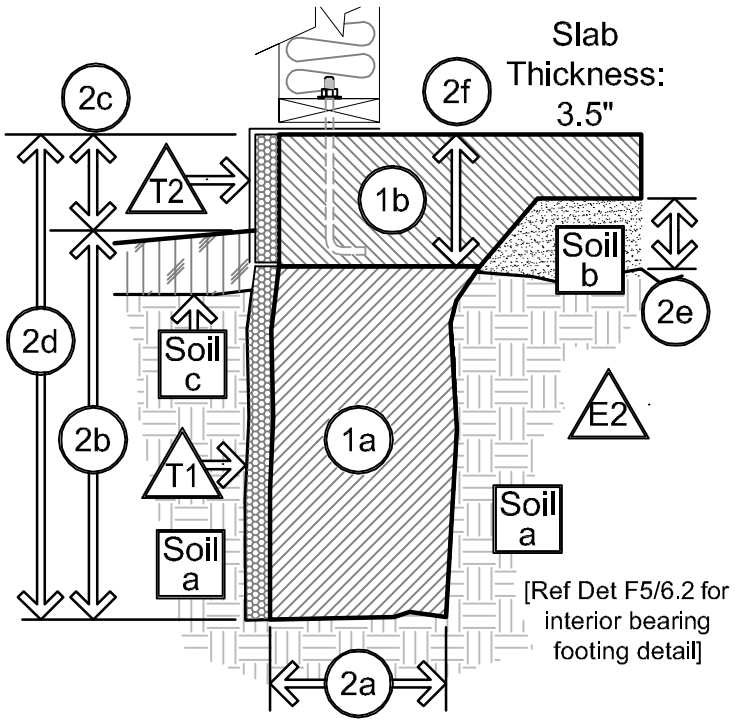

Dimension and Reinforcing Requirement Table / Type 2.0							
Soil Type a	(2a)	(2b)	(2c)	(2d)	(2e)	(2f)	Reinforcing
Sandy/Silts PI <16	See note below for min. widths	30" min.	6" min.	36" min.	4" min.	8" min.	Ref detail #1 below
Sandy Clay/Clay PI 16 to 30		36" min.	6" min.	42" min.	4" min.	8" min.	Ref detail #2 below
Lean/Fat Clay PI 31 to 45		42" min.	6" min.	48" min.	6" min.	8" min.	Ref detail #3 below

Consult a Kansas design professional where PI > 45.

Note on foundation widths: Level I loading = 8"; Level II loading = 12"; Level III loading = 16"; Add 4" to all min dimensions with addition of brick ledge. (Reference common note E2/Sht 0.3 for Load Level Definitions.)

Detail 1 / Type 2.0a

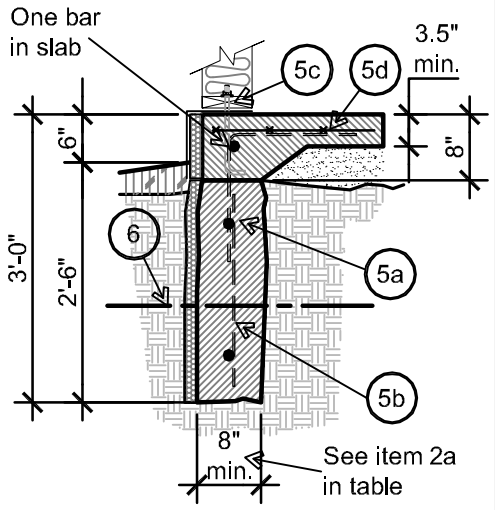

Type 2.0 / Grade Beam in PI<16 soil

Detail 2 / Type 2.0b

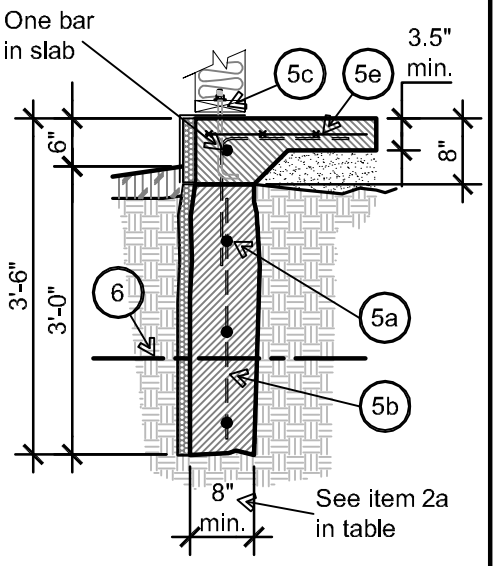

Type 2.0 / Grade Beam in PI 16 to 30 soil

Detail 3 / Type 2.0c

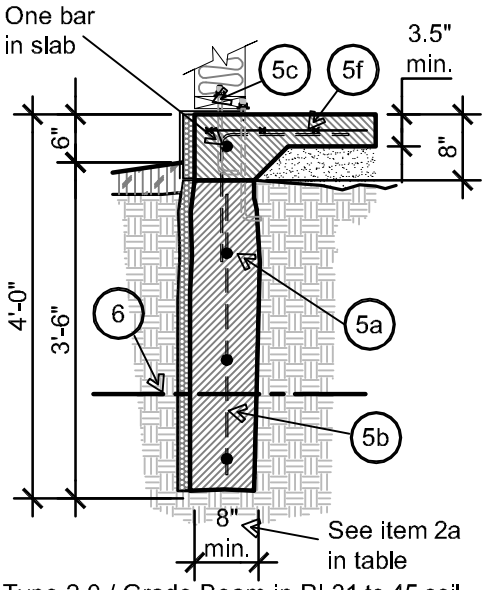

Type 2.0 / Grade Beam in PI 31 to 45 soil

REV 11/22/11

Footing & Stem Wall Foundation

Construction Standards

FOUNDATION TYPE 3.0 DETAIL NOTES:

(1a) Fndn Type 3.0 / Footing (1b) Stemwall (1c) 8" thicken edge Slab.

(2) For all note "2" dimensionsal standards (a thru g), reference the table on this page:

(3) Reference Soil & Backfill standards for these material types: Soil a, Soil b, Soil c, Soil d

(4) Reference specifically these Common Notes for type 3 fndn:
A1 thru A3, B3, C1, C2, D2 thru D4, R1 thru R5, T1, T2

(5) Steel Reinforcing and anchoring standards:
a) 3- #4 horizontal continuous at PI<16, 4- #4 at PI 16+. One bar in slab.
b) #4 vertical @ 30" o.c. max. centers, center in wall. (Hook 24" into slab)
c) Anchor Bolts, see note 7.
d) Slab reinforcement: 6x6-w1.4 x w1.4 WWF (6x6 - 10x10 mesh), center in slab.
e) Slab reinforcement: 6x6-w2.9 x w2.9 WWF in sheets (6x6 - 6x6 mesh), center in slab.
f) Slab reinforcement: #4 @ 24" o.c. each way, center in slab or approved post tensioning system.
g) #4 dowels @ 30" o.c. max. (dowels and verticals could be one piece) 6" leg at bottom.
h) 2-#4 cont. @ 1'-4" min. ftg. & 3-#4 cont. @1'8" min. ftg.

(6) All foundations must extend 12" min. into undisturbed soil free of vegetation or into engineered controlled fill materials. Foundations or grade beams may also be supported on concrete piers extending into deeper bearing material. These systems must be designed and sealed by a Kansas design professional.

(7) Min. 2x4 PL w/ ½" dia. anchor embedded 7" into wall at 48" o.c. max. with washer & nut. One anchor within 12" of each end & splices. Optional anchors shall be designed and sealed by a Kansas design professional.

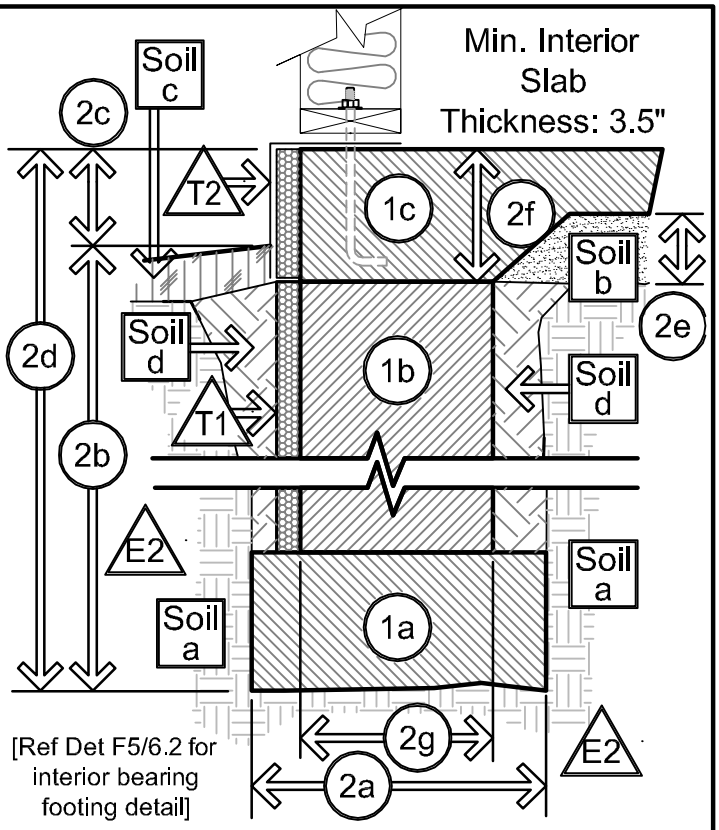

Dimension and Reinforcing Requirement Table / Type 3.0								
Soil Type a	(2a)	(2b)	(2c)	(2d)	(2e)	(2f)	(2g)	Reinforcing
Sandy/Silts PI <15	See note below for min. widths	30" min.	6" min.	36" min.	4" min.	8" min.	8" min. (10" min @ brick ledge)	Ref detail #1 below
Sandy Clay/ Clay PI 15 to 35		36" min.	6" min.	42" min.	4" min.	8" min.		Ref detail #2 below
Lean/Fat Clay PI>35		42" min.	6" min.	48" min.	6" min.	8" min.		Ref detail #3 below

Consult a Kansas design professional where PI > 45.

Level I & II loading: 1'-8" min. & 2'-0" min w/ Brick Ledge, at Level III loading: 2'-0" min & 2'-4" w/ Brick Ledge. (See Common Note E2/0.3 for Loading Level)

Detail 1 / Type 3.0a

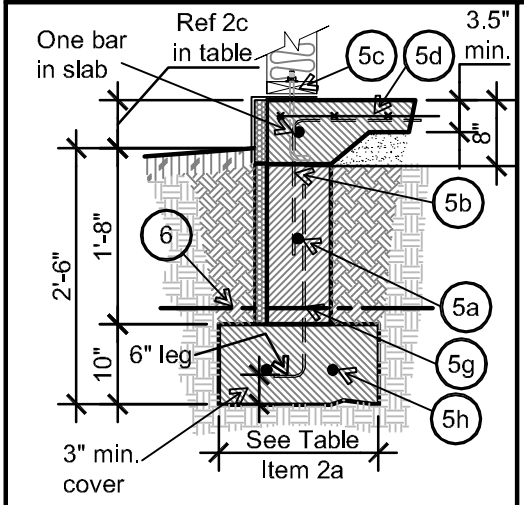

Type 3.0 / Stem Wall in PI<16 soil

(IMPORTANT NOTE: Use this detail, 3.0a, at all walk-out basement edges)

Detail 2 / Type 3.0b

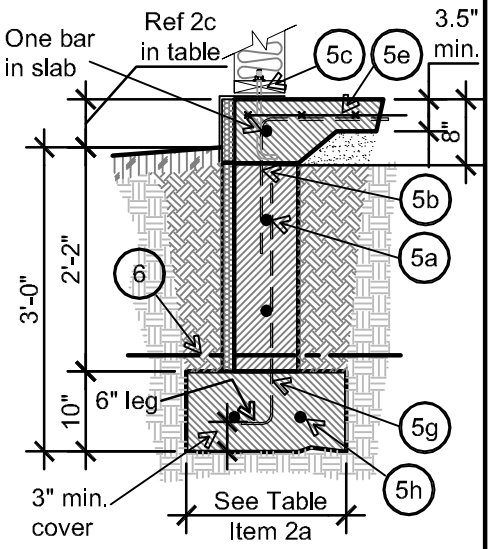

Type 3.0 / Stem Wall in PI 16 to 30 soil

Detail 3 / Type 3.0c

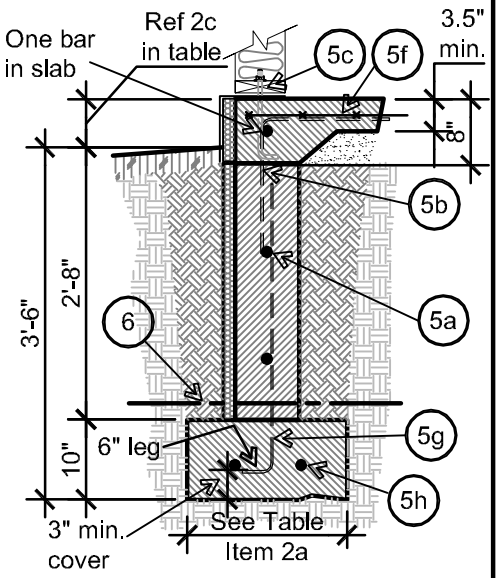

Type 3.0 / Stem Wall in PI 31 to 45 soil

REV 11/22/11

Frost Wall at Garage Slab

Construction Standards

FOUNDATION TYPE 3.1 DETAIL NOTES:

If no ledge poured to support slab see note R5 for doweling requirements

(1a) Fndn Type 3.1 / Footing (1b) Frost Wall (1c) Slab at garage

(2) For all note "2" dimensionsal standards (a thru g), reference the table on this page:

(3) Reference Soil & Backfill standards for these material types: Soil a | Soil b | Soil c | Soil d

(4) Reference specifically these Common Notes for type 3.1 fndn: A1 thru A3 · B3 · C1 · C2 · D2 thru D4 · R1 thru R5 · T1 · T2

(5) Steel Reinforcing and anchoring standards:
a) 3- #4 horizontal continuous at PI<16, 4- #4 at PI 16+.
b) #4 vertical @ 30" o.c. max. centers. Center in upper wall. (Hook 24" into slab)
c) Anchor Bolts see note 7
d) Slab reinforcement: 6x6-w1.4 x w1.4 WWF (6x6 - 10x10 mesh), center in slab.
e) Slab reinforcement: 6x6-w2.9 x w2.9 WWF in sheets (6x6 - 6x6 mesh), center in slab.
f) Slab reinforcement: #4 @ 24" o.c. each way, center in slab or approved post tensioning system.
g) #4 dowels @ 30" o.c. max. (dowels and verticals could be one piece)

(6) All foundations must extend 12" min. into undisturbed soil free of vegetation or into engineered controlled fill materials. Foundations or grade beams may also be supported on concrete piers extending into deeper bearing material. These systems must be designed and sealed by a Kansas design professional.

(7) Min. 2x4 PL w/ ½" dia. anchor embedded 7" into wall at 48" o.c. max. with washer & nut. One anchor within 12" of each end & splices. Optional anchors shall be designed and sealed by a Kansas design professional.

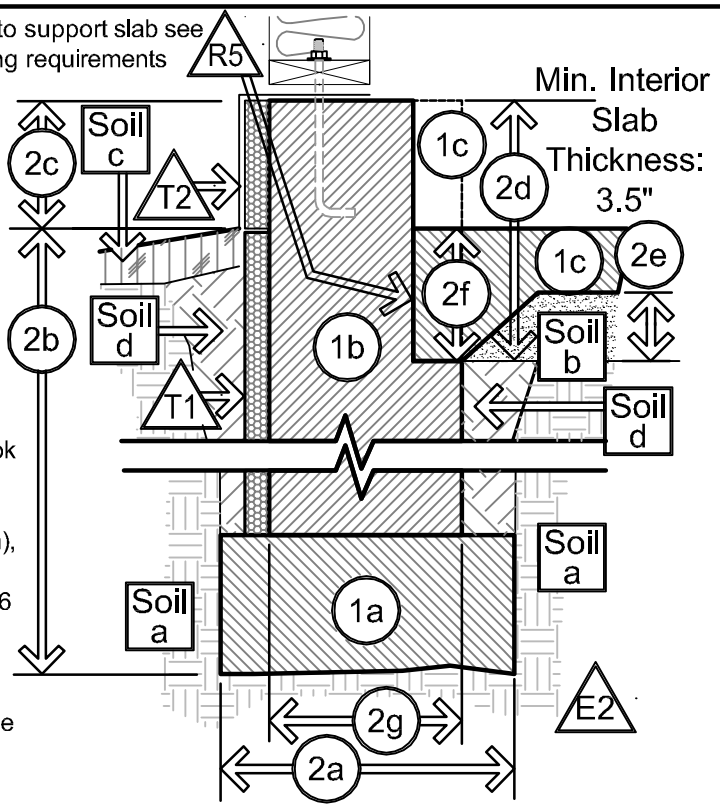

Dimension and Reinforcing Requirement Table / Type 3.1								
Soil Type a	(2a)	(2b)	(2c)	(2d)	(2e)	(2f)	(2g)	Reinforcing
Sandy/Silts PI <15	See note below for min. widths	30" min.	6" min.	16" min.	4" min.	8" min.	8" min.	Ref detail #1 below
Sandy Clay/ Clay PI 15 to 35		36" min.	6" min.		4" min.	8" min.		Ref detail #2 below
Lean/Fat Clay PI>35		42" min.	6" min.		6" min.	8" min.		Ref detail #3 below

Consult a Kansas design professional where PI > 45.

Level I & II loading: 1'-8" min. & 2'-0" min w/ Brick Ledge, at Level III loading: 2'-0" min & 2'-4" w/ Brick Ledge. (See Common Note E2/0.3 for Loading Level)

Detail 1 / Type 3.1a

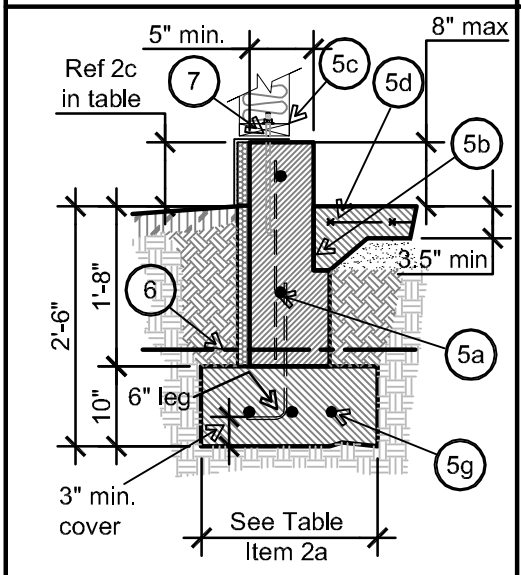

Type 3.1 / Frost Wall in PI<16 soil

Detail 2 / Type 3.1b

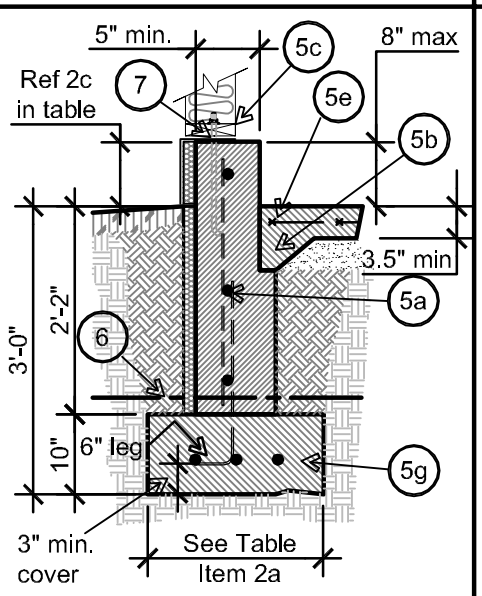

Type 3.1 / Frost Wall in PI 16 to 30 soil

Detail 3 / Type 3.1c

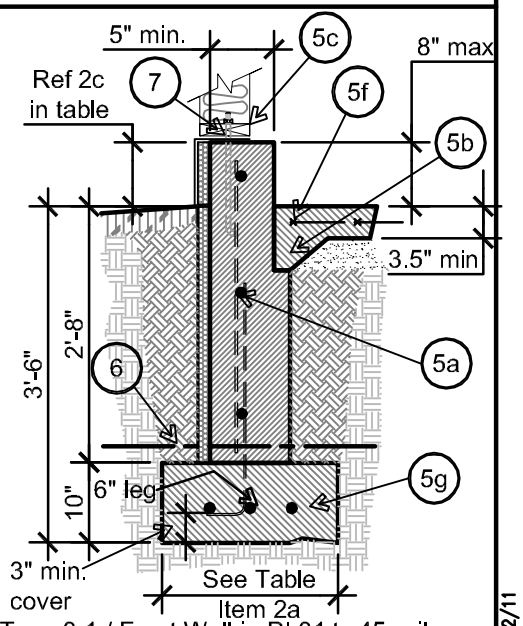

Type 3.1 / Frost Wall in PI 31 to 45 soil

REV 11/22/11

Basement Walls & Foundations

Construction Standards (9'-0" max. from top of foundation)

FOUNDATION TYPE 4.0 DETAIL NOTES:

(1a) FOUNDATION FOOTING:

(1b) BASEMENT WALL: Do not backfill any wall before 7 days when average air temperature is above 50 degrees and not before 10 days when average air temerature is below 50 degrees. Reference general note B2.

(1c) BASEMENT SLAB: See note 6.

(2) For all note "2" dimensional standards (a thru e), reference the following table:

Vertical #4 Rebar Schedule		
Soil	8" wall	10" wall
PI<16	24" o.c.	30" o.c.
PI 16-35	18" o.c.	24" o.c.
PI 36-45	12" o.c.	18" o.c.

Min. treated 2x6 PL w/ ½" dia. x10" min. anchor bolts @ 32" o.c. max. or ⅝" dia. x10" min. anchor bolts @ 48" o.c. max. with washer & nuts. (Approved adhesive or mechanical anchors drilled in place are acceptable.) Anchor bolts to be placed at centerline of the sill plate and embedded a minimum of 7" into concrete. A maximum of one plate may be added on top of the lower plate. Refer to detail. A1 & A2 / 6.0.

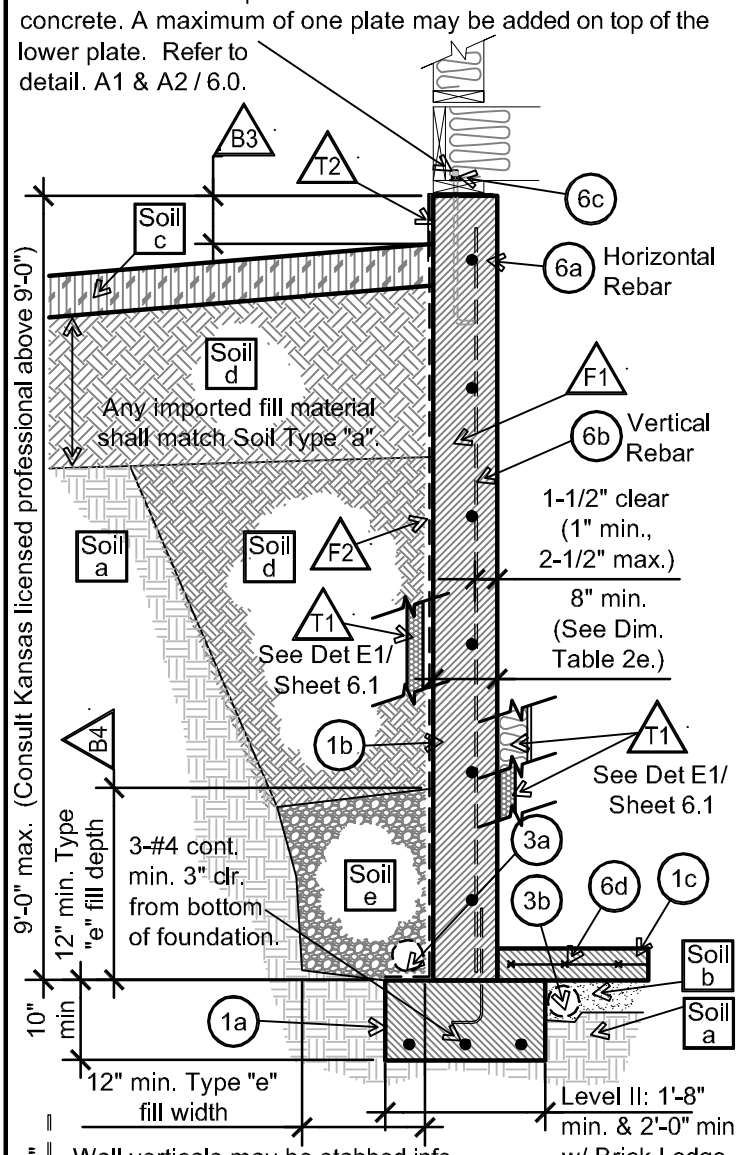

Wall verticals may be stabbed into footing at contractor's option in lieu of dowels. Verts shall not extend into subgrade below footing.

Level II: 1'-8" min. & 2'-0" min w/ Brick Ledge, at Level III 2'-0" min & 2'-4" w/ Brick Ledge.

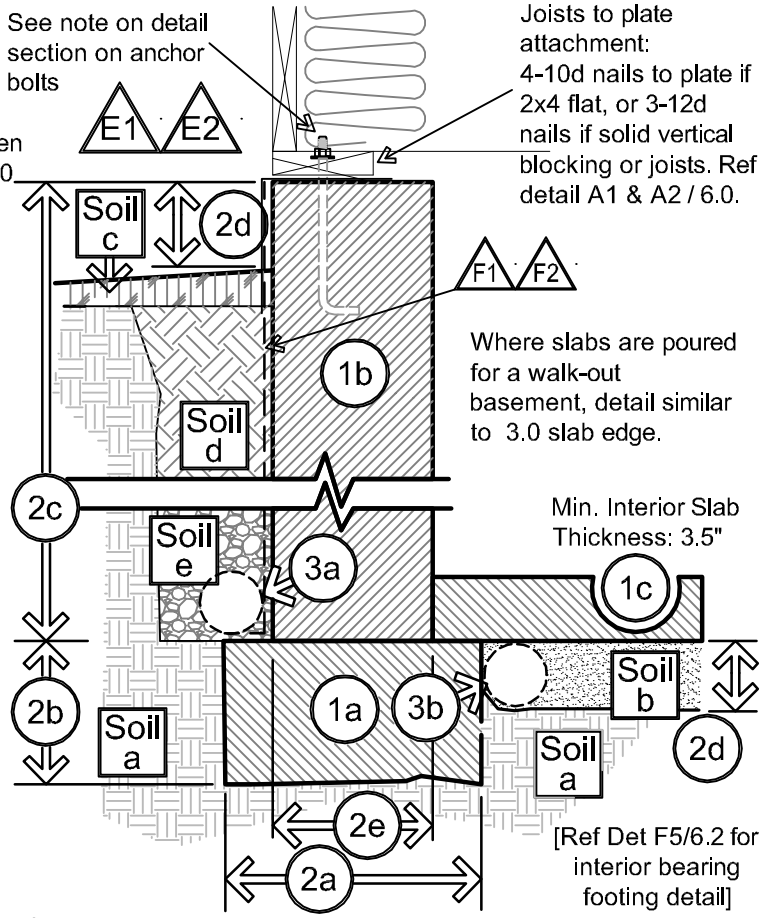

(3) 3a Exterior Drain Tile & 3b Interior Drain Tile. Reference Common Note D1/Sht 0.2

Dimension and Reinforcing Requirement Table						
Soil Type a	(2a)	(2b)	(2c)	(2d)	(2e)	Reinforcing
Sandy/Silts PI <16	20" min.	10" min.	9'-0" max.	4" min.	8" min.	Ref detail this sheet
Sandy Clay/Clay PI 16 to 30	(24" min. w/	10" min.	wall height	4" min.	(10" min @	for reinforcing
Lean/Fat Clay PI 31 to 45	brick ledge)	10" min.	from fndn.	6" min.	brick ledge)	standards

Consult a Kansas design professional where PI > 45.

(4) Reference Soil & Backfill standards for these material types:
Soil a, Soil b, Soil c, Soil d, Soil e

(5) Reference specifically these Common Notes for type 4 fndn:
A1, A2, B1 thru B6, C1, C2, D1 thru D4
E1, E2, F1, F2, R1 thru R5, T1, T2

(6) Steel Reinforcing and anchoring standards:
a) #4 horizontal @ 16" o.c. continuous - uppermost bar must be within 8" from top of wall. (Lap 18" min. at all splices & corner bars)
b) Reference vertical rebar schedule.
c) Anchor Bolts, see common note "R2" and detail this sheet.
d) Slab reinforcement: 6x6-w1.4 x w1.4 WWF (6x6 - 10x10 mesh), center in slab.

(7) Treat slab edges of walk-out basements according to criteria for Type 3.0a/ Stem Wall Det #1. Also reference detail F4/sht. 6.2.

Crawl Space Foundation Type

Construction Standards

FOUNDATION TYPE 5.0 DETAIL NOTES:

1a FOUNDATION FOOTING:

1b CRAWL SPACE STEM WALL: Do not backfill any wall before 7 days.

2 For all note "2" dimensional standards (a thru c), reference the following table:

Dimension and Reinforcing Requirement Table						
Soil Type a	(2a)	(2b)	(2c)	(2d)	(2e)	Reinforcing
Sandy/Silts PI <16	See note below for min. widths	10" min.	See Details 1 thru 3 below	6" min.	8" min. (10" min @ brick ledge)	Ref detail this sheet for reinforcing standards
Sandy Clay/Clay PI 16 to 30		10" min.		6" min.		
Lean/Fat Clay PI 31 to 45		10" min.		6" min.		

Consult a Kansas design professional where PI > 45.

Level I & II loading: 1'-8" min. & 2'-0" min w/ Brick Ledge, at Level III loading: 2'-0" min & 2'-4" w/ Brick Ledge. (See Common Note E2/0.3 for Loading Level)

3 Reference Soil & Backfill standards for these material types: Soil a, Soil c, Soil d

4 Reference specifically these Common Notes for type 5 fndn: A1, A2, B2, B3, C1, C2, D2, D3, R1 thru R5, T1, T2

5 Steel Reinforcing and anchoring standards:
a) 2- #4 horizontal continuous @ PI<16; 3-#4 horizontal continuous @ PI 16 and above.
b) #4 vertical @ 30" o.c. max., center in wall (Hook 24" into slab)
c) Anchor Bolts, see note 7.

6 All foundations must extend 12" min. into undisturbed soil free of vegetation or into engineered controlled fill materials. Foundations or grade beams may also be supported on concrete piers extending into deeper bearing material. These systems must be designed by an architect or engineer.

7 Min. treated 2x6 PL w/ ½" dia. x10" min. anchor bolts @ 32" o.c. max. or ⅝" dia. x10" min. anchor bolts @ 48" o.c. max. with washer & nuts. (Approved adhesive or mechanical anchors drilled in place are acceptable.) Anchor bolts to be placed at centerline of the sill plate and embedded a minimum of 7" into concrete. A maximum of one plate may be added on top of the lower plate.

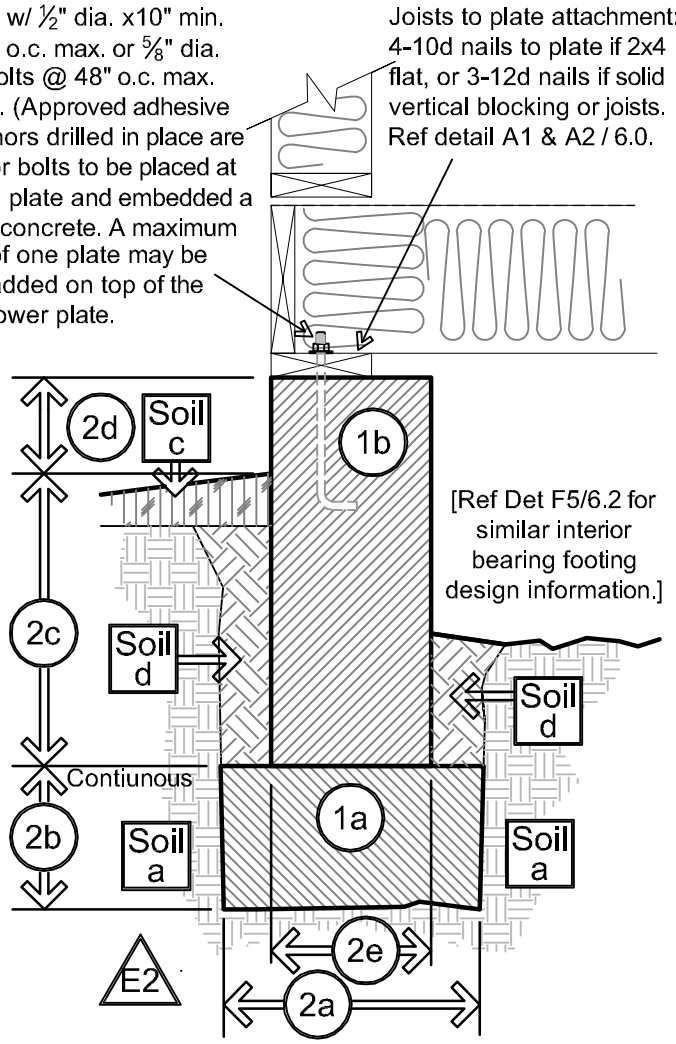

Detail 1 / Type 5.0a

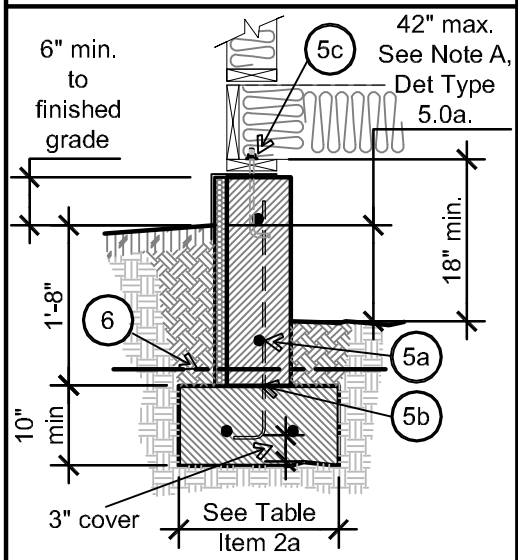

(Note A - If dimension from grade to crawl space soil exceeds 42", build wall to Type 4.0, Basement, standards.)

Type 5.0 / Crawl Space in PI<16 soil

Detail 2 / Type 5.0b

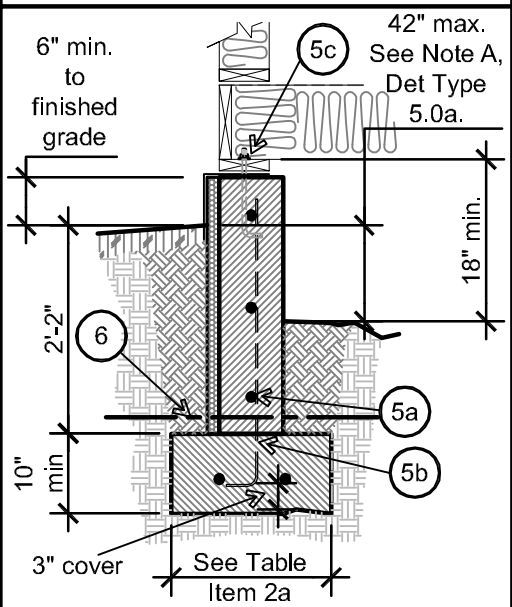

Type 5.0 / Crawl Space in PI 16 to 30 soil

Detail 3 / Type 5.0c

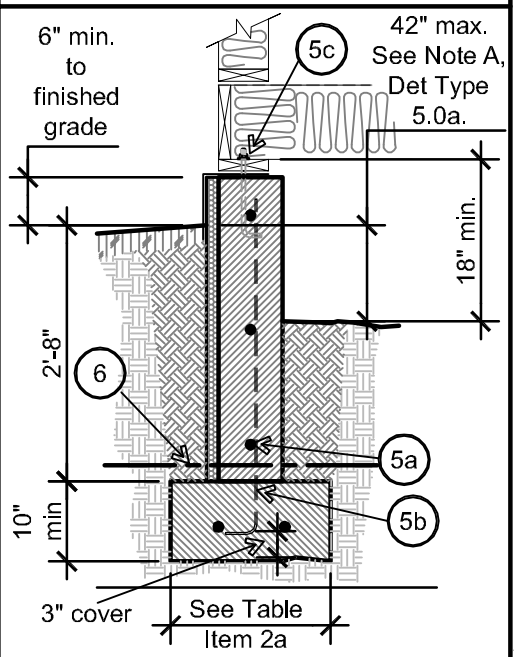

Type 5.0 / Crawl Space in PI 31 to 45 soil

REV 11/22/11

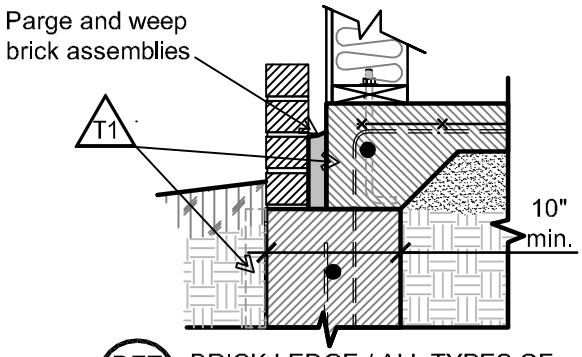

DET B1 BRICK LEDGE / ALL TYPES OF SLAB-ON-GRADE CONSTRUCTION.

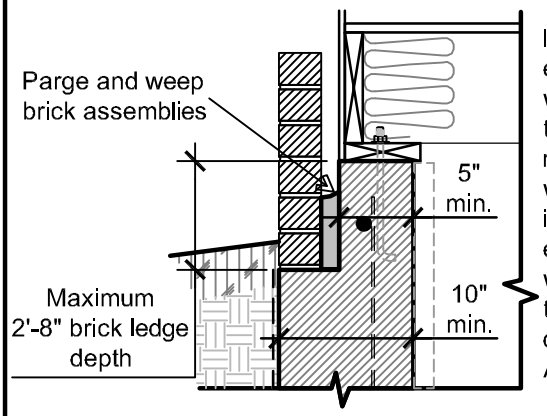

If brick ledge height exceeds 2'-8", walls must be 12" thick providing a 7" minimum interior wall. Center rebar in this 7" wall extension. Where walls retain less than 4' of soil, use detail sim. to type A4 / sht 6.0.

DET B2 BRICK LEDGE / BASEMENT & CRAWL SPACE FOUNDATION TYPES.

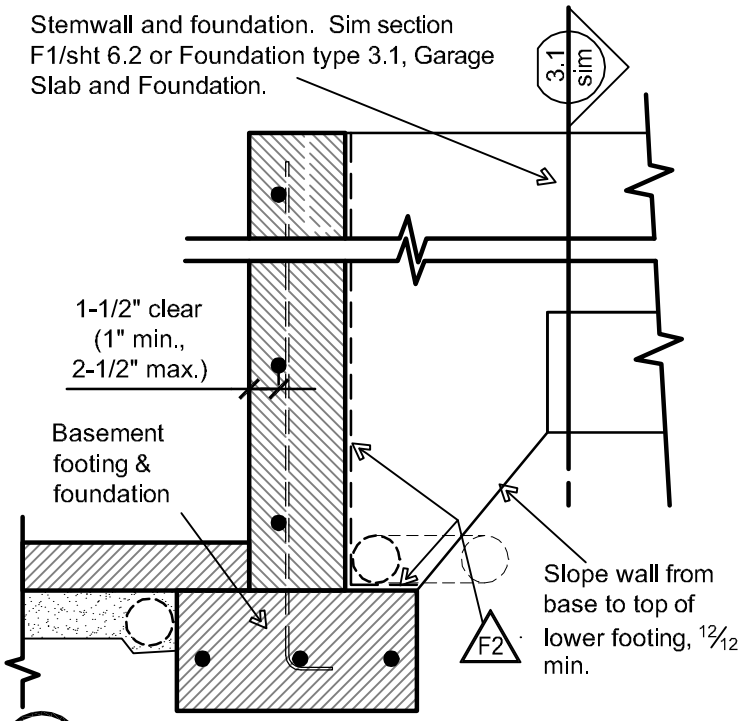

DET C1 STEPPED FOUNDATIONS FROM BASEMENT TO CRAWL OR GARAGE.

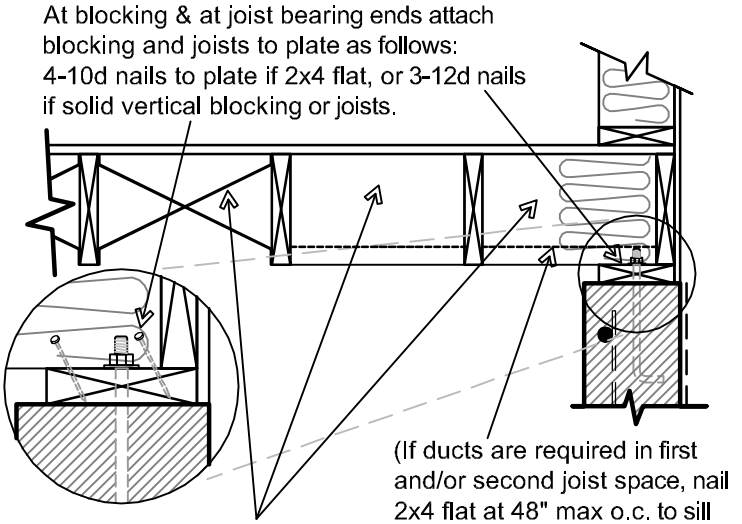

DET A1 TYPICAL BASEMENT WALL FRAMING PARALLEL TOP OF WALL.

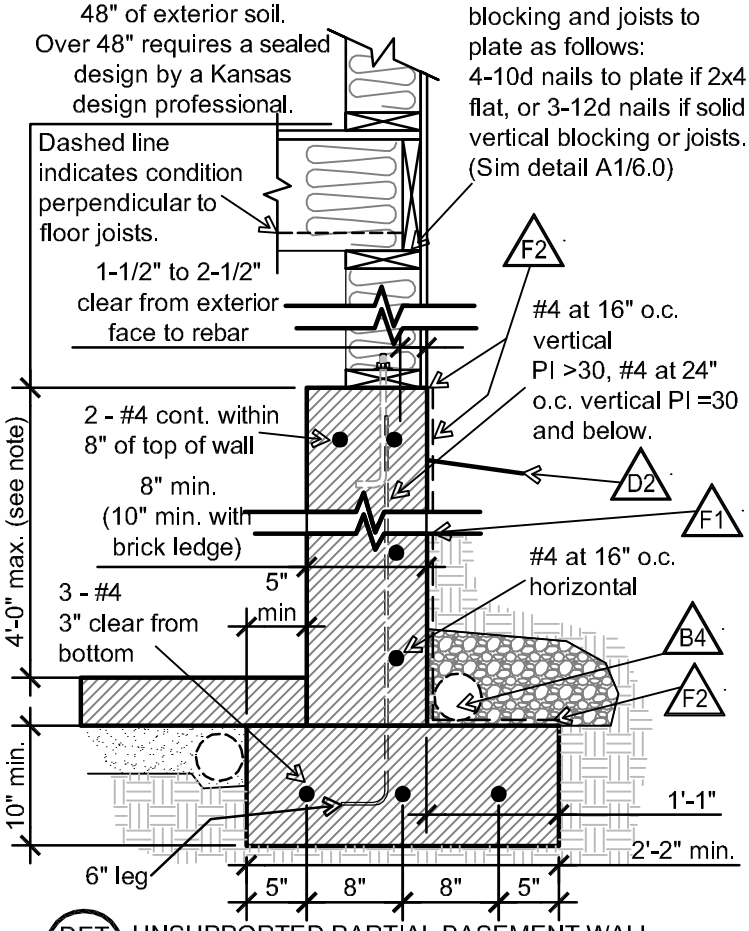

DET A2 UNSUPPORTED PARTIAL BASEMENT WALL CONSTRUCTION (ALSO USE AT "VIEW-OUT" BASEMENT WALL LOCATIONS)

Foundation Details
Construction Standards

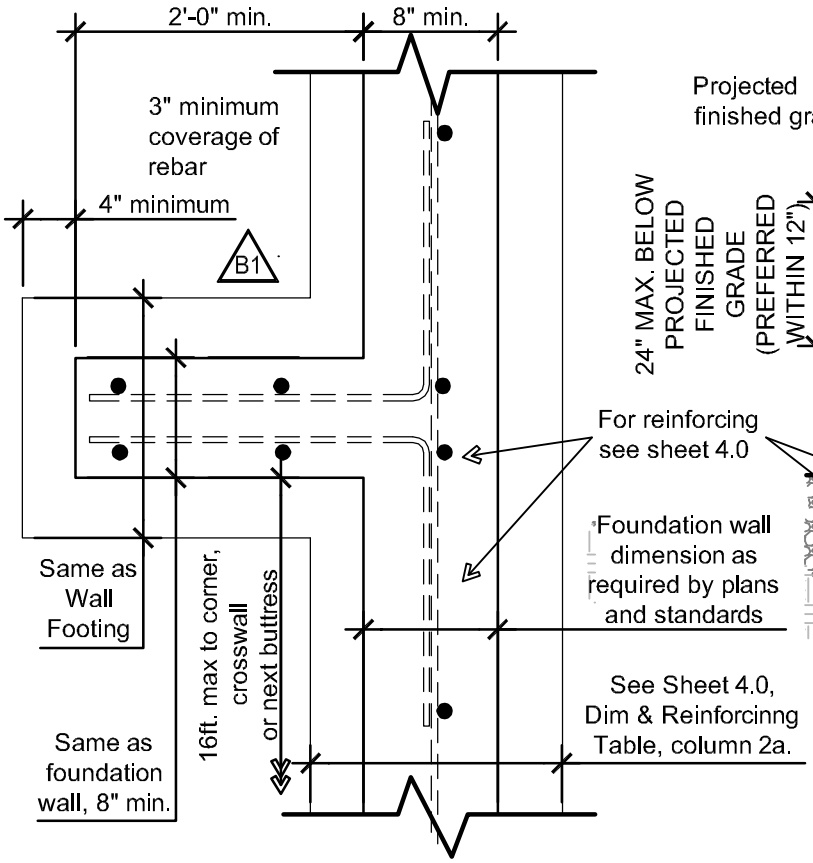

DET D2 FOUNDATION BUTTRESS HORIZONTAL SECTION (Plan view)

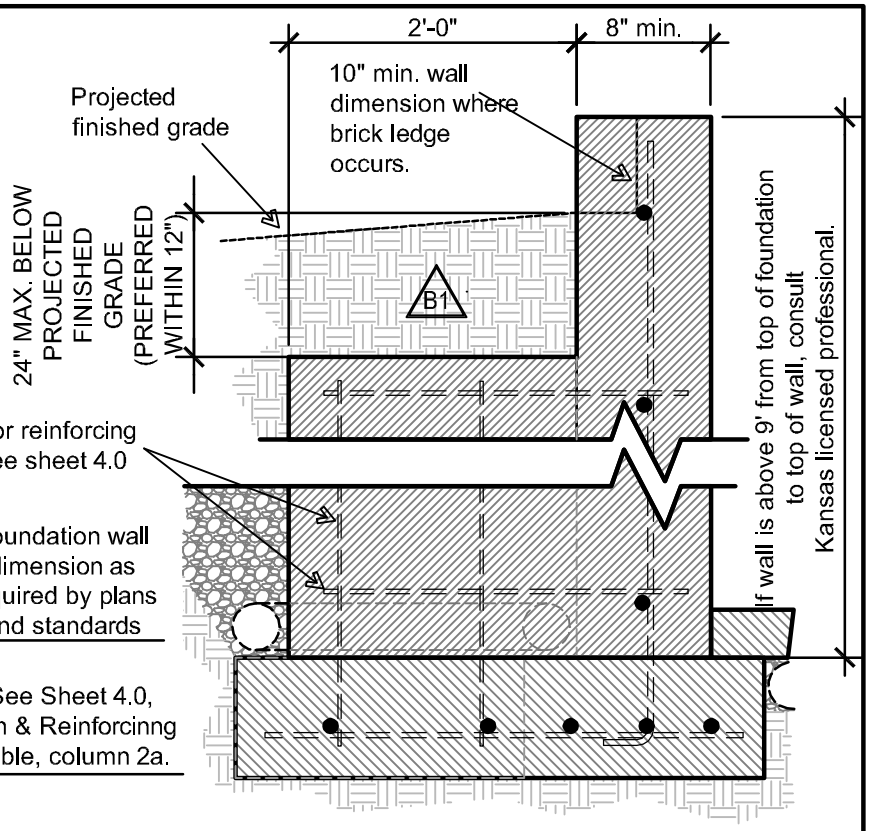

DET D1 FOUNDATION BUTTRESS VERTICAL SECTION

3 OPTIONS FOR MEETING BASEMENT WALL INSULATION REQUIREMENTS:

A. EXTERIOR INSULATION OPTION:
1) Install approved XPS or EPS insulation on exterior of foundation, full height, to R-10 min. Insure that exposed insulation at top of wall is protected against damage from abuse and exposure.

B. INTERIOR INSULATION OPTIONS:
1) Apply contiunous insulation, full height, with EPS or XPS sheet material to R-10 min.
2) Construct interior stud walls, full height and insulate walls to R-13 min.

Reference table "A", Sheet 0.3, Foundation Insulation Standards, for details on insulation of basement and slab-on-grade projects.

DET E1 BASEMENT INSULATION OPTION WALL INSULATION REQUIREMENTS

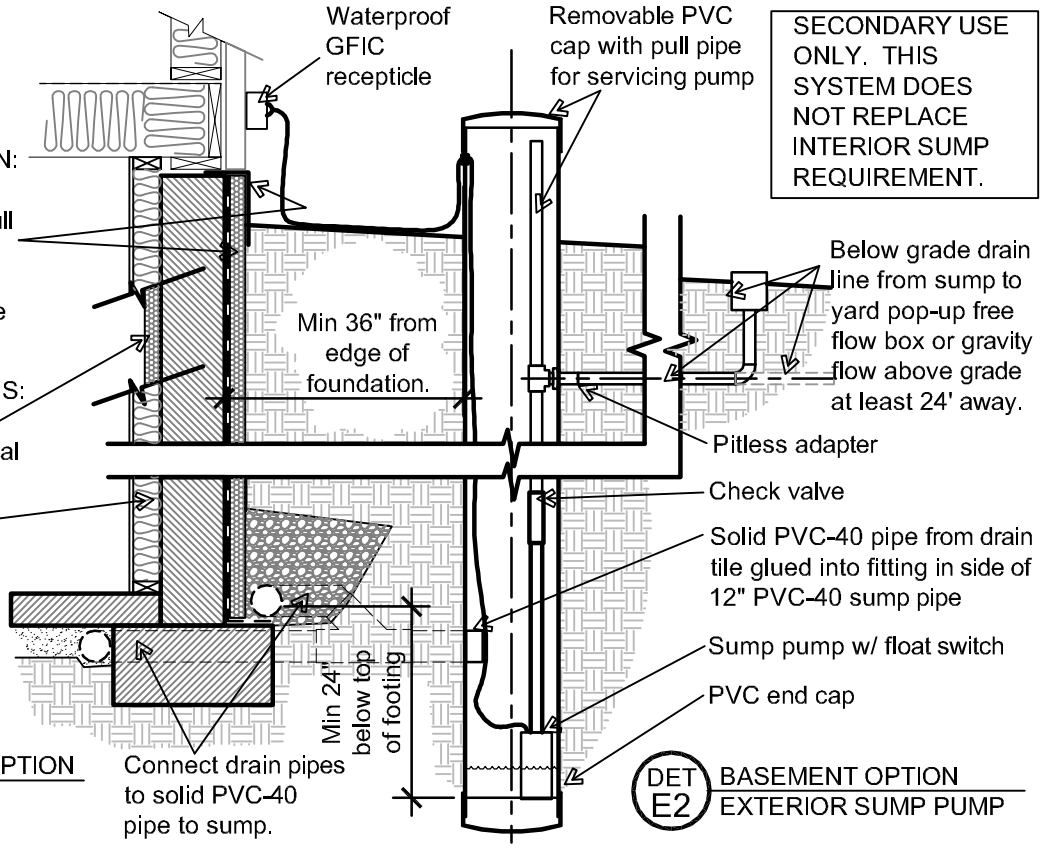

DET E2 BASEMENT OPTION EXTERIOR SUMP PUMP

REV 11/22/11

Alternative Foundation Details

Construction Standards

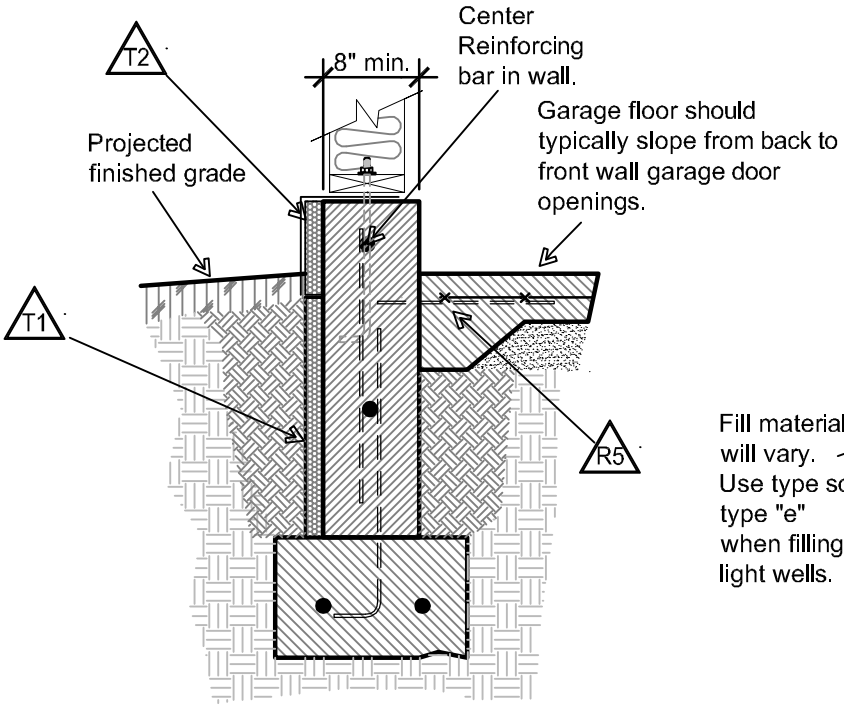

DET F1 GARAGE SLAB & FOUNDATION ALTERNATIVE DETAIL

Reference foundation 3.1, garage slab and foundation detail for reinforcing and dimensioning requirements

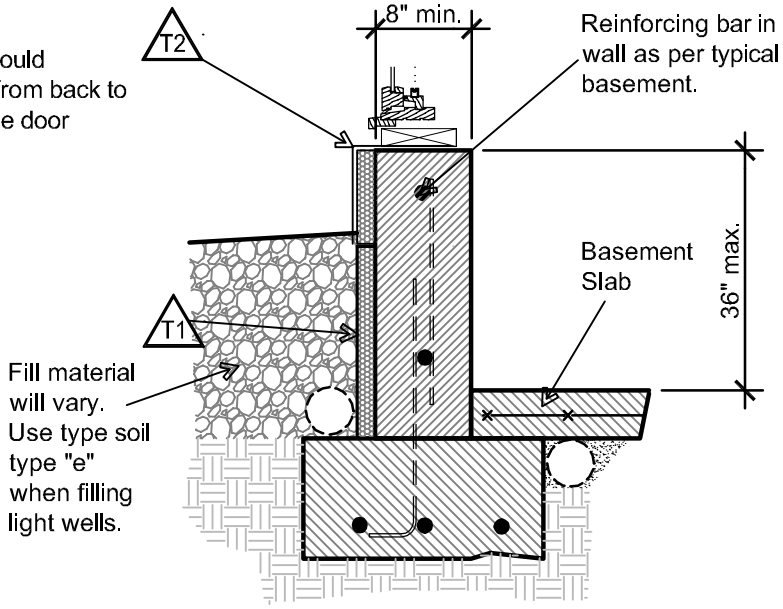

DET F2 PIT or LIGHTWELL BASEMENT WALL SUPPLEMENTAL DETAIL

Similar to basement wall 4.0 detail for reinforcing and dimensioning requirements.

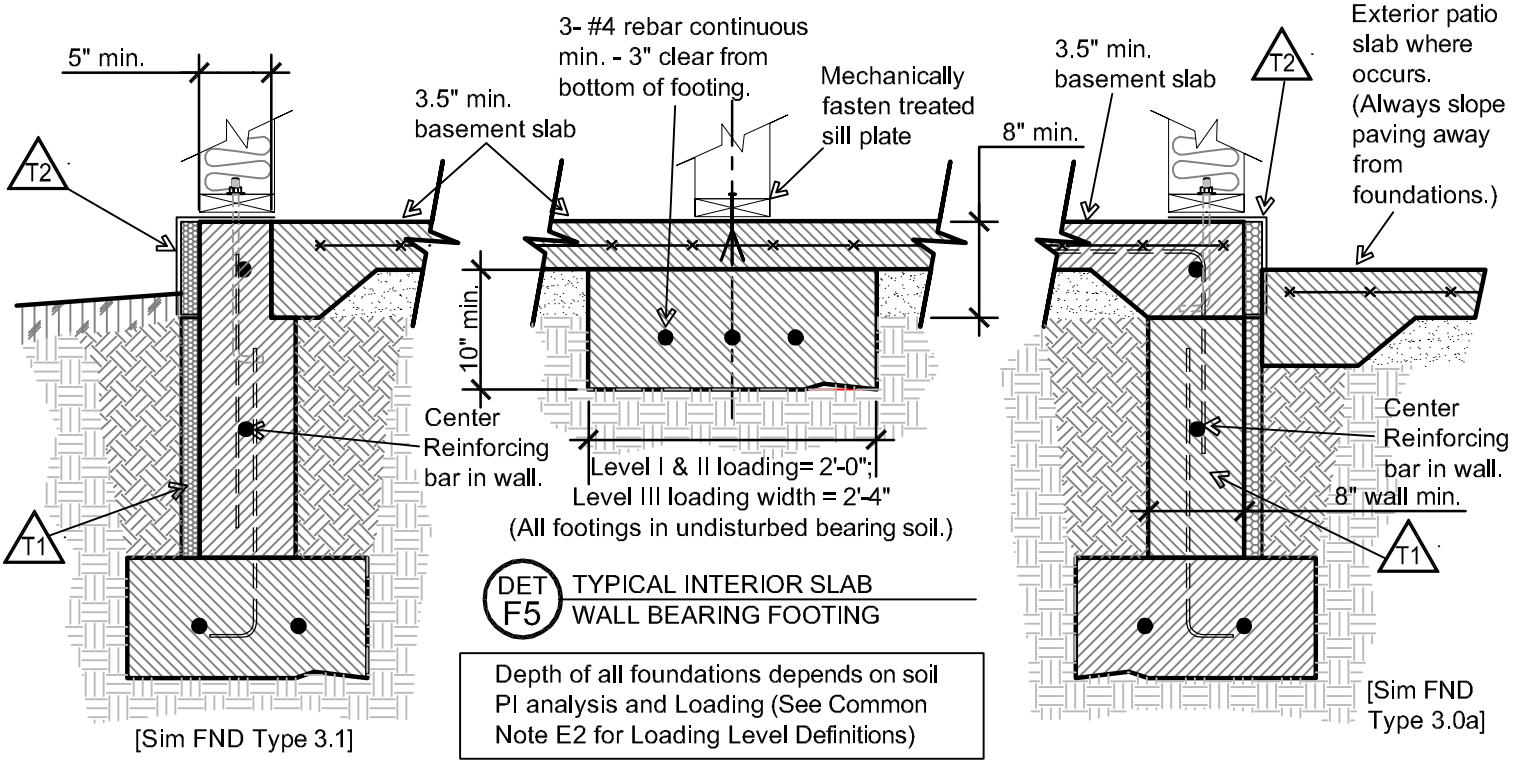

DET F5 TYPICAL INTERIOR SLAB WALL BEARING FOOTING

Depth of all foundations depends on soil PI analysis and Loading (See Common Note E2 for Loading Level Definitions)

DET F3 FULL ELEVATION FROST-WALL FLOATING INTERIOR SLAB ALTERNATIVE BASEMENT WALK-OUT DETAIL

Similar to foundation 3.1 stemwall and foundation detail for reinforcing and dimensioning requirements

[Ref Det F5/6.2 for interior bearing footing]

DET F4 WALK-OUT BASEMENT @ EXTERIOR PATIO TRADITIONAL SLAB EDGE

Similar to foundation 3.0a stemwall and foundation detail for reinforcing and dimensioning requirements

Foundation & Slab Site Conditions

Construction Standards

Maintaining positive surface drainage away from the foundation edge by adding non-granular (cohesive) soil over settling backfill material will help move water away from the buildings perimeter.

When perimeter soil drainage is not maintained, increased water penetration at foundation promotes soil expansion, greatly increasing damage potential. D3

Slabs will heave and foundation edges will separate as a result of soil expansion pressure causing not only physical but structural damage.

When soils below the slab move, below slab water and waste pipes can rupture, further accentuating damaging conditions.

CAUTION!: Pouring slabs on top of soils with LOW (DRY) MOISTURE CONTENT will promote conditions favorable to "HEAVING". As moisture is drawn INTO soil below the slab, it EXPANDS, increasing pressure promotes slab failure.
Higher PI soils accentuate this tendency.

Soil b
Soil a
Soil a
FLOW

Increasing moisture content causes expansion of clayey soil materials.

SITE S1 INCREASING BELOW GRADE MOISTURE
"DOMING" TENDENCY WITH INCREASE PRESSURE

Soil Type "b" provides a buffer for normal seasonal variations in soil moisture content. Extremes in weather, flaws in drainage planning and maintenance, abnormal or existing ground water conditions will accentuate clayey soil movement resulting in damage to slabs and foundation. Where extreme soil or moisture conditions exist or are anticipated it is recommended that a soils engineer be consulted and aggressive subsurface material conditioning be implemented.

Deeper foundations in higher PI soils (Soil "a") provide greater protection against thermal and moisture damage, some of these benefits include:

1. Moisture retaining soils (High PI) allow frost (freezing) to penetrate deeper below grade, deeper foundations are required to stay below frost depth; and
2. Moisture variations create swelling and shrinking of clay type soils. The deeper the foundation, the less impact surface water has on soils below the slab.

Thermal and Moisture impact is greatest at surface and decreases with depth.

Increasing the type and amount of reinforcing steel in slabs with higher PI ratings helps to strengthen slabs against failure when soil below experiences differential movement.

Soil b
Soil a
Ulility Lines
Soil a

Reinforcing material is not effective if not located properly in slab.

IMPORTANT NOTE: Foundations depend on even soil bearing in undisturbed soil, consistent in type and free from vegetation, to distribute loading properly. Foundations must be stepped to follow existing site grading conditions, supported on piers or rest in properly tested and compacted fill material. Failure to follow this accepted practice will promote differential settlement over time and is likely to result in foundation, subsequent structural framing and finish material damages.

SITE S2 EXISTING SITE PREPARATION
TENDENCIES OF SOIL MATERIALS WITH CHANGING ENVIRONMENTAL CONDITIONS

Dryer soils on exterior wick moisture from below slab, shrinking interior material and bearing capacity.

Soil b
Soil a
Soil a
FLOW

Drying causes shrinkage of clayey soil materials.

CAUTION!: Pouring new slabs on top of soils with HIGH (WET) MOISTURE CONTENT will create conditions favorable to "CUPPING". As moisture is wicked out from below the slab, soils SHRINK. decreasing bearing capacity.
Higher PI soils accentuate this tendency.

SITE S3 DECREASING BELOW GRADE MOISTURE
"CUPPING" TENDENCY WITH DECREASED PRESSURE