Table of Contents

Agenda 7

Repair or Removal of Dangerous and Unsafe Structures, 1209 North Jackson. (District VI)

Agenda Report No. III-1 19

Repair or Removal of Dangerous and Unsafe Structure, 1715 North Chautauqua. (District I)

Agenda Report No. III-2 21

Public Hearings for Douglas Place TIF Project Plan, Community Improvement District and Facade Improvements. (District I)

Agenda Report No. IV-1 23

Douglas Place TIF Project Plan 30

Ordinance No. 49-079 56

Ordinance No. 49-080 59

Ordinance No. 49-081 66

Ordinance No. 49-082 70

Ordinance No. 49-083 75

Ordinance No. 49-084 80

Ordinance No. 49-100 82

Charter Ordinance No. 216 85

Douglas Place Development Agreement 87

Douglas Place CID Agreement 122

Tax Payment Agreement 141

Douglas Place TIF Project Plan 146

Douglas Place TIF Project Plan 172

Douglas Place Facade Easement 198

Douglas Place Parking Agreement - 9-9-11 clean version 204

Douglas Place Parking Structure Retail Lease - 090911 clean version 209

Slawson Parking Agreement - 090911 clean version 227

Public Hearing on the Water and Sewer Cost of Service Analysis.

Agenda Report No. IV-2 232

Old Town Anniversary Celebration Memorandum of Understanding.

Agenda Report No. IV-3 233

WDDC MOU Agreement 234

Ordinances Amending City Code Sections 2.05.010 and 2.05.020, Concerning Master Written Undertaking for GO Bond and Note Sales, and Repealing Prior Ordinances No. 48-900 and 48-901.

Agenda Report No. II-4 238

Ordinance No. 49-077 240

Ordinance No. 49-078 255

Delineated Ordinance 270

Amendments to the City of Wichita Residential Building Code (Title 18.51) to adopt revised foundation, basement and slab-on-grade construction standards for one and two family dwellings.

Agenda Report No. IV-5 . . . 286
Ordinance No. 49-085 . . . 289
Delineated Ordinance . . . 298
Supplement to Standards . . . 307
Slab on Grade Standards . . . 310

Regional Air Quality Improvement Project.

Agenda Report No. IV-6 . . . 324
Wichita AQ Impr Project revised Scope July 2011 . . . 326
City Council Consent Agenda Report 2 15 2011 . . . 334
2011 TIP Amendment 3 Application Form . . . 335
KDOT Draft Agreement for AQ Project 9 1 2011 . . . 341
Resolution . . . 349
KDOT Agreement for AQ Project 9 9 2011 . . . 350
Final KDOT Agreement with attachments 9 13 2011 . . . 354

(9:30 a.m. or soon thereafter)

Agenda Report No. IV-7 . . . 362
OCI Supporting Docs Summary Table Spreadsheet . . . 364
OCI Supporting Docs Writeups . . . 368

Public Hearing and Issuance of Hospital Facilities Improvement and Refunding Revenue Bonds, Via Christi Health System, Inc. (Districts II, III and VI)

Agenda Report No. II-8 . . . 390
Ordinance No. 49-101 . . . 392

ZON2011-00021 – City change from SF-5 Single-Family Residential to TF-3 Two-Family Residential; generally located on the west side of Hoover Street, Southwest of the terminus of 9th Street North. (District VI)

Agenda Report No. V-1 . . . 394
Ordinance No. 49-086 . . . 397
ZON2011-21 Proteset Map and other Background Information . . . 398

ZON2011-00022 – City zone change from SF-5 Single-Family Residential to TF-3 Two-Family Residential on property located at 532 South St. Paul. (District IV)

Agenda Report No. V-2 . . . 405
ZON2011-22 Site Plan and Background Information . . . 408

Supplemental Agreement No. 6 - AECOM Program and Construction Management Services - Air Capital Terminal 3 (ACT 3) Program.

Agenda Report No. VII-1 . . . 413
Supplemental Agreement No. 6 . . . 416

Preliminary Estimates. (See Attached)

Preliminary Estimates . . . 428

Petition to improve the Big Slough South at the Kansas Turnpike, south of 47th Street South, west of the I-135 Freeway. (District III)
Agenda Report No. II-5a 429
Resolution No. 11-217 431
Petition 434
Petition to construct drainage improvements in an area north of Kellogg, east of Maize. (District V)
Agenda Report No. II-5b 439
Resolution No. 11-218 441
Petition 443
Community Events – Pace Race 5K Run/Walk. (District VI)
Agenda Report No. II-6a 448
Community Events – Inspire Hope 8K and 1 Mile Run/Walk. (District II)
Agenda Report No. II-6b 449
Community Events – Monster Bash 5K Run/Walk. (District I)
Agenda Report No. II-6c 450
Community Events –Girls on the Run Fall 5K. (District II)
Agenda Report No. II-6d 451
Community Events – KS 150 Festival. (Districts I and VI)
Agenda Report No. II-6e 452
Community Events – Wichita Play Day. (District III)
Agenda Report No. II-6f. 453
Community Events – KEYN Oldies Concert Series Finale. (District I)
Agenda Report No. II-6g 454
Community Events - Prairie Fire Marathon Set-up. (District I)
Agenda Report No. II-6h 455
Community Events Prairie Fire Half Marathon.
Agenda Report No. II-6i. 456
Community Events - Prairie Fire Marathon and Fun Run.
Agenda Report No. II-6j. 458
Providing Local Laser Printer Repair – Selection of Vendors.
Agenda Report No. II-7a 461
Contract. 462
Talking Books Service Contract.
Agenda Report No. II-7b 469
Talking Books Contract 470
Agreement for Design Services for Water, Storm Water Sewer, and Paving Improvements in Monarch Landing 3rd Addition, north of 21st, west of 159th Street East. (District II)
Agenda Report No. II-8a and Agreement 481
Agreement for Design Services for Redbud Multi-Use Path. (District I)
Agenda Report No. II-8b and Agreement 489
Resolution No. 11-219 498

Supplemental Agreement No. 2 for Design Services for the Arkansas River Bike Path, between Galena and George Washington Boulevard. (District III)

Agenda Report No. II-8c and Agreement 499

Change Order for Meridian Dog Park - Permeable Paver Parking Lot. (District VI)

Agenda Report No. II-9a 502

Change Order. 503

Change Order No. 2 - City Hall Landscape and Security Enhancements.

Agenda Report No. II-9b and Change Order 504

Change Order No. 5- ASR Recharge Well Support.

Agenda Report No. II-9c and Change Order 508

Partial Acquisition of 1552 South Broadway for the Harry and Broadway Intersection Improvement Project. (Districts I and III)

Agenda No. II-10a. 511

Contract for Conveyance, Exhibit, ROW Exhibit, Exhibit 7, & Aerial Map 512

Partial Acquisition at 510 East 49th Street North for the Wichita-Valley Center Flood Control Levee Certification and Rehabilitation Project. (County)

Agenda Report No. II-10b. 521

Real Estate Agreement, Aerial and Tract Maps. 522

Partial Acquisition at 5140 North Valentine for the Wichita-Valley Center Flood Control Levee Certification and Rehabilitation Project. (County)

Agenda No. II-10c. 526

Permanent Easement, Real Estate Agreement, Tract and Aerial Maps. 527

Partial Acquisition of 1404 North Fairmount Street North for the East 13th Street, Hydraulic to Oliver Road Improvement Project. (District I)

Agenda No. II-10d. 534

Real Estate Purchase Agreement, Tract and Aerial Map 535

Proposed Assessment Rolls.

Agenda Report No. II-12. 540

Report on Claims for July 2011.

Agenda Report No. II-13 541

Senior Management Report, 2nd Quarter, 2011.

Agenda Report No. II-14 542

Design/Build ADA Compliant Synthetic Safety Surfaced Ball Diamond at Orchard Park. (District V)

Agenda Report No. II-15 544

Lafarge Contract 546

Supporting Document. 554

Contract. 556

Removal of Nuisance Abatement Special Property Tax Assessment, 1832 North Lorraine Street. (District I)

Agenda Report No. II-16 567
Midwest Financial Investigations Task Force.
Agenda Report No. II-17 568
MOU 569
Resolutions Authorizing Congestion Mitigation and Air Quality (CMAQ) Grant from the Federal Transit Administration.
Agenda Report No. II-18 584
Resolution No. 11-220 585
KDOT Request for CMAQ Impr Program Project 587
Interlocal Agrmt for CMAQ Grant 588
47th Street South Improvement, between Lulu and Hydraulic. (District III)
Agenda Report No. II-19, CIP Sheet 597
Ordinance No. 49-087. 599
Kellogg, between Cypress and 159th Street East. (District II)
Agenda Report No. II-20 600
Ordinance No. 49-076. 601
Request for Declaration of Emergency 602
Hawker Beechcraft and Wichita Radio Control Club donation of Chapin Park Remote Controlled Flying Field Improvements. (District III)
Agenda Report No. II-21 603
MOU 604
Notice of Intent to Use Debt Financing - 1980 Airport Road Roof Replacement - Wichita Mid-Continent Airport.
Agenda Report No. II-22 607
Resolution No. A11-221. 608
List of Second Reading Ordinances. (See Attached)
Second Reading Ordinances 610
*ZON2011-00023 – City zone change from SF-5 Single-Family Residential to TF-3 Two-Family Residential; generally located south of Maple Street, on the west side of Sheridan Avenue and north of University Avenue. (District IV)
Agenda Report No. II-24 611
Ordinance No. 49-088. 613
ZON2011-23 Background Information 614
*ZON2000-00045 – Extension of time to complete the platting requirement for a zone change from SF-5 Single-Family Residential (“SF-5”) to LC Limited Commercial (“LC”) generally located south of Central and west of Tyler Road. (District V)
Agenda Report No. II-25 617
Letter of Request 620
*SUB2011-00026 -- Plat of Lord’s Diner South Hillside Addition located north of 31st Street South on the west side of Hillside. (District III)
Agenda Report No. II-26 621
Ordinance No. 49-089. 623

*A11-03 – Request by Michael E. and Kathy K. Smith to annex lands generally located one-half mile north of 21st Street North on the west side of 159th Street East. (District II)

Agenda Report No. II-27 624

A11-03 Ordinance 49-090 626

A11-03 SF-10 Ordinance 49-091 628

A11-03 Map 630

A11-03 Resolution County 631

*1980 Airport Road Roof Replacement - Wichita Mid-Continent Airport.

Agenda Report No. II-28 633

*Federal Aviation Administration - Lease No. DTFASW-10-L-00268, Supplemental Agreement No. 3 - 2204 South Tyler Road - Wichita Mid-Continent Airport.

Agenda Report No. II-29 634

Supplemental Agreement 635

*Federal Aviation Administration - Lease No. DTFACN-12-L-00014 - 1801 Airport Road - Wichita Mid-Continent Airport.

Agenda Report No. II-30 639

Agreement 640

*AOPA Insurance Agency, Inc. - Lease Agreement for Office Use of 1995 Midfield Road - Wichita Mid-Continent Airport.

Agenda Report No. II-31 672

Agreement 673

REVISION:
ADDITION OF ITEMS IV-8 & VIII-1

FINAL

CITY COUNCIL

CITY OF WICHITA
KANSAS

City Council Meeting
09:00 a.m. September 13, 2011

City Council Chambers
455 North Main

OPENING OF REGULAR MEETING

-- Call to Order

-- Invocation

-- Pledge of Allegiance

-- Approve the minutes of the regular meeting on August 23, 2011

AWARDS AND PROCLAMATIONS

-- Proclamations:

National Ballroom Dance Week
National Alcohol and Drug Addition Recovery Month
Phillip Blake Day

-- Distinguished Service Awards:

Leo Andrade
Keith R. Lopez

I. PUBLIC AGENDA

NOTICE: No action will be taken relative to items on this agenda other than referral for information. Requests to appear will be placed on a "first-come, first-served" basis. This portion of the meeting is limited to thirty minutes and shall be subject to a limitation of five minutes for each presentation with no extension of time permitted. No speaker shall be allowed to appear more frequently than once every fourth meeting. Members of the public desiring to present matters to the Council on the public agenda must submit a request in writing to the office of the city manager prior to twelve noon on the Tuesday preceding the council meeting. Matter pertaining to personnel, litigation and violations of laws and ordinances are excluded from the agenda. Rules of decorum as provided in this code will be observed.

None

II. CONSENT AGENDAS (ITEMS 1 THROUGH 31)

NOTICE: Items listed under the "Consent Agendas" will be enacted by one motion with no separate discussion. If discussion on an item is desired, the item will be removed from the "Consent Agendas" and considered separately

*(The Council will be considering the City Council Consent Agenda as well as the Planning, Housing, and Airport Consent Agendas. Please see **"ATTACHMENT 1 – CONSENT AGENDA ITEMS"** for a listing of all Consent Agenda Items.)*

COUNCIL BUSINESS

III. UNFINISHED COUNCIL BUSINESS

1. Repair or Removal of Dangerous and Unsafe Structures, 1209 North Jackson. (District VI)

   RECOMMENDED ACTION: Take appropriate action based on the testimony received at the hearing. Any extension of time granted to repair the structure should be conditioned on the following: (1) taxes and specials are paid as of September 13, 2011; (2) the structures are maintained secure as of September 13, 2011 and is kept secured during renovation; and (3) the premise is kept clean and free of debris as of September 13, 2011, and is so maintained during renovation.

2. Repair or Removal of Dangerous and Unsafe Structure, 1715 North Chautauqua. (District I)

   RECOMMENDED ACTION: Take appropriate action based on the testimony received at the hearing. Any extension of time granted to repair the structure should be conditioned on the following: (1) special assessment is paid as of September 13, 2011 or shortly thereafter; (2) the structure is maintained secure as of September 13, 2011 and is kept secured during renovation; and (3) the premise is kept clean and free of debris as of September 13, 2011, and is so maintained during renovation.

IV. NEW COUNCIL BUSINESS

1. Public Hearings for Douglas Place TIF Project Plan, Community Improvement District and Facade Improvements. (District I)

   RECOMMENDED ACTION: Close the public hearings and:1)Approve first reading of the ordinances approving the development agreement, adopting the TIF Project Plan, establishing the CID and levying the maximum façade assessments; 2)Approve first reading of the bonding ordinance; 3)Approve first reading of the amended charter ordinance for use of transient guest taxes; 4)Approve the Development Agreement; 5)Approve the CID Agreement; 6)Approve the Façade Easement; 7)Approve the Parking Structure Retail Space Lease; 8)Approve the Developer Parking Agreement; 9)Approve the Slawson Parking Agreement; 10)Approve the Tax Payment Agreement; and 11)Authorize the necessary signatures.

2. Public Hearing on the Water and Sewer Cost of Service Analysis.

   RECOMMENDED ACTION: Close the public hearing.

3. Old Town Anniversary Celebration Memorandum of Understanding.

   RECOMMENDED ACTION: Approve the Memorandum of Understanding between the City of Wichita and Wichita Downtown Development Corporation to approve in-kind services in the amount not to exceed $5,000.

4. Ordinances Amending City Code Sections 2.05.010 and 2.05.020, Concerning Master Written Undertaking for GO Bond and Note Sales, and Repealing Prior Ordinances No. 48-900 and 48-901.

   RECOMMENDED ACTION: Adopt the attached Ordinances to amend City Code Sections 2.05.010 and 2.05.020 and authorize their publication and repeal prior Ordinances No. 48-900 and No. 48-901; and find and declare, upon the request of the Mayor, that a public emergency exists, requiring the final passage of the Ordinances on the date of their introduction.

5. Amendments to the City of Wichita Residential Building Code (Title 18.51) to adopt revised foundation, basement and slab-on-grade construction standards for one and two family dwellings.

   RECOMMENDED ACTION: Approve first reading of the proposed ordinance amending the City's Residential Building Code (Chapter 18.51 of the Code of the City of Wichita) to adopt by reference the Wichita Foundation, Basement and Slab-on-Grade Standards for One and Two Family Dwellings (August 30, 2011).

6. Regional Air Quality Improvement Project.

   RECOMMENDED ACTION: Approve the Grant Application and the Agreement and authorize necessary signatures to allow receipt of the award.

(9:30 a.m. or soon thereafter)

7. Repair or Removal of Dangerous and Unsafe Structures. (Districts I and III)

Property Address	Council District
a. 1106 North Chautauqua	I
b. 342 North Pennsylvania	I
c. 437 North Grove	I
d. 1101 North New York	I
e. 1233 North Estelle	I
f. 1347 North Minnesota	I
g. 2200 East Pawnee (commercial building)	III

RECOMMENDED ACTION: Close the public hearing, adopt the resolutions declaring the buildings to be dangerous and unsafe structures, and accept the BCSA recommended actions to proceed with condemnation, allowing 10 days to start demolition and 10 days to complete removal of the structures. Any extensions of time granted to repair any structures would be contingent on the following: (1) All taxes have been paid to date as of September 13, 2011; (2) the structures have been secured as of September 13, 2011, and will continue to be kept secured; and (3) the premises are mowed and free of debris as of September 13, 2011, and will be so maintained during renovation.

8. ***Public Hearing and Issuance of Hospital Facilities Improvement and Refunding Revenue Bonds, Via Christi Health System, Inc. (Districts II, III and VI)***

RECOMMENDED ACTION: Close the public hearing and approve first reading of the Bond Ordinance authorizing the execution and delivery of documents for the issuance of Hospital Facilities Refunding and Improvement Revenue Bonds for Via Christi Health Systems in the amount not to exceed $200,000,000 and approve the necessary signatures; approve the form of the Bond Purchase Agreements and authorize the Mayor to sign once the pricing process has been completed; and authorize staff to apply to the Kansas Department of Revenue for a sales tax exemption.

COUNCIL BUSINESS SUBMITTED BY CITY AUTHORITIES

PLANNING AGENDA

NOTICE: Public hearing on planning items is conducted by the MAPC under provisions of State law. Adopted policy is that additional hearing on zoning applications will not be conducted by the City Council unless a statement alleging (1) unfair hearing before the MAPC, or (2) alleging new facts or evidence has been filed with the City Clerk by 5p.m. on the Wednesday preceding this meeting. The Council will determine from the written statement whether to return the matter to the MAPC for rehearing.

V. NON-CONSENT PLANNING AGENDA

1. ZON2011-00021 – City change from SF-5 Single-Family Residential to TF-3 Two-Family Residential; generally located on the west side of Hoover Street, Southwest of the terminus of 9th Street North. (District VI)

   RECOMMENDED ACTION: 1) Adopt the findings of the MAPC and approve the zone change and authorize the Mayor to sign the ordinance (three-fourth majority vote required to override the protest petition); 2) deny the case (an override of the Planning Commission's recommendation requires two-third majority vote of the City Council on the first hearing) or 3) return the case to MAPC for reconsideration (requires simple majority vote).

2. ZON2011-00022 – City zone change from SF-5 Single-Family Residential to TF-3 Two-Family Residential on property located at 532 South St. Paul. (District IV)

   RECOMMENDED ACTION: 1) Adopt the findings of the MAPC found in the MAPC minutes and deny the zone change, (simple majority vote required); 2) approve the zone change based upon the findings found in the staff report, authorize the Mayor to sign the ordinance and place the ordinance on first reading (requires a two-thirds vote to override the MAPCs recommendation) or 3) return the application to the MAPC for further consideration (simple majority vote required).

HOUSING AGENDA

NOTICE: The City Council is meeting as the governing body of the Housing Authority for consideration and action on the items on this Agenda, pursuant to State law, HUD, and City ordinance. The meeting of the Authority is deemed called to order at the start of this Agenda and adjourned at the conclusion.

Fern Griffith, Housing Member is also seated with the City Council.

VI. NON-CONSENT HOUSING AGENDA

None

AIRPORT AGENDA

NOTICE: The City Council is meeting as the governing body of the Airport Authority for consideration and action on items on this Agenda, pursuant to State law and City ordinance. The meeting of the Authority is deemed called to order at the start of this Agenda and adjourned at the conclusion.

VII. NON-CONSENT AIRPORT AGENDA

1. Supplemental Agreement No. 6 - AECOM Program and Construction Management Services - Air Capital Terminal 3 (ACT 3) Program.

   RECOMMENDED ACTION: Approve Supplemental Agreement No. 6 with AECOM and authorize the necessary signatures.

COUNCIL AGENDA

VIII. COUNCIL MEMBER AGENDA

1. ***Approval of travel for Council Member Peter Meitzner to attend the Aviation Expo/China 2011, in Beijing, China, September 20-26, 2011.***

   RECOMMENDED ACTION: Approve the travel.

IX. COUNCIL MEMBER APPOINTMENTS

1. Board Appointments.

   RECOMMENDED ACTION: Approve the Appointments.

Adjournment

(ATTACHMENT 1 – CONSENT AGENDA ITEMS 1 THROUGH 31)

II. CITY COUNCIL CONSENT AGENDA ITEMS

1. Report of Board of Bids and Contracts dated September 12, 2011.

   RECOMMENDED ACTION: Receive and file report; approve Contracts; authorize necessary signatures.

2. Applications for Licenses:

Renewal	2011	Address
Valerie Washington	Xcitement Video	3909 West Pawnee

   RECOMMENDED ACTION: Approve the licenses.

3. Applications for Licenses to Retail Cereal Malt Beverages:

New	2011	(Consumption off Premises)
Auan Huynh	Dao Variety Store***	1601 East Central

   *** Retailer Grocery stores, convenience stores, etc.

   RECOMMENDED ACTION: Approve licenses subject to Staff review and approval.

4. Preliminary Estimates:
   a. Preliminary Estimates. (See Attached)

   RECOMMENDED ACTION: Receive and file.

5. Petitions for Public Improvements:
   a. Petition to improve the Big Slough South at the Kansas Turnpike, south of 47th Street South, west of the I-135 Freeway. (District III)
   b. Petition to construct drainage improvements in an area north of Kellogg, east of Maize. (District V)

   RECOMMENDED ACTION: Approve Petitions; adopt resolutions.

6. Consideration of Street Closures/Uses.
    a. Community Events – Pace Race 5K Run/Walk. (District VI)
    b. Community Events – Inspire Hope 8K and 1 Mile Run/Walk. (District II)
    c. Community Events – Monster Bash 5K Run/Walk. (District I)
    d. Community Events – Girls on the Run Fall 5K. (District II)
    e. Community Events – KS 150 Festival. (Districts I and VI)
    f. Community Events – Wichita Play Day. (District III)
    g. Community Events – KEYN Oldies Concert Series Finale. (District I)
    h. Community Events - Prairie Fire Marathon Set-up. (District I)
    i. Community Events - Prairie Fire Half Marathon.
    j. Community Events - Prairie Fire Marathon and Fun Run.

    RECOMMENDED ACTION: Approve the request subject to; (1) Hiring off-duty certified law enforcement officers as required; (2) Obtaining barricades to close the streets in accordance with requirements of Police, Fire and Public Works Department; and (3) Certificate of Liability Insurance on file with the Community Events Coordinator.

7. Agreements/Contracts:
    a. Providing Local Laser Printer Repair – Selection of Vendors.
    b. Talking Books Service Contract.

    RECOMMENDED ACTION: Approve Agreements/Contracts; authorize the necessary signatures.

8. Design Services Agreements:
    a. Agreement for Design Services for Water, Storm Water Sewer, and Paving Improvements in Monarch Landing 3rd Addition, north of 21st, west of 159th Street East. (District II)
    b. Agreement for Design Services for Redbud Multi-Use Path. (District I)
    c. Supplemental Agreement No. 2 for Design Services for the Arkansas River Bike Path, between Galena and George Washington Boulevard. (District III)

    RECOMMENDED ACTION: Approve Agreements/Contracts; authorize the necessary signatures.

9. Change Orders:
    a. Change Order for Meridian Dog Park - Permeable Paver Parking Lot. (District VI)
    b. Change Order No. 2 - City Hall Landscape and Security Enhancements.
    c. Change Order No. 5- ASR Recharge Well Support.

    RECOMMENDED ACTION: Approve the Change Orders and authorize the necessary signatures.

10. Property Acquisitions:
    a. Partial Acquisition of 1552 South Broadway for the Harry and Broadway Intersection Improvement Project. (Districts I and III)
    b. Partial Acquisition at 510 East 49th Street North for the Wichita-Valley Center Flood Control Levee Certification and Rehabilitation Project. (County)
    c. Partial Acquisition at 5140 North Valentine for the Wichita-Valley Center Flood Control Levee Certification and Rehabilitation Project. (County)
    d. Partial Acquisition of 1404 North Fairmount Street North for the East 13th Street, Hydraulic to Oliver Road Improvement Project. (District I)

    RECOMMENDED ACTION: Approve budgets and Contracts; authorize necessary signatures.

11. Minutes of Advisory Boards/Commissions

    Wichita Transit Advisory Board, August 12, 2011
    Wichita Employees' Retirement System, July 20, 2011
    Deferred Compensation Board of Trustees, May 19, 2011
    Deferred Compensation Board of Trustees, July 12, 2011
    Joint Investment Committee, July 7, 2011

    RECOMMENDED ACTION: Receive and file.

12. Proposed Assessment Rolls.

    Proposed Assessment Rolls have been prepared for, fourteen (14) paving projects and it is necessary to set a public hearing date. Informal hearing with City personnel will be held October 3, 2011 at 11:00 a.m. Notification of both the informal and formal public hearings regarding the proposed special assessments will be mailed to affected property owners on September 23, 2011.

    RECOMMENDED ACTION: Set the hearing on the Proposed Assessment Rolls for 9:30 a.m., Tuesday, October 18, 2011, and publish the notices of hearing at least once not less than 10 days prior to the date of the hearing.

13. Report on Claims for July 2011.

    RECOMMENDED ACTION: Receive and file.

14. Senior Management Report, 2nd Quarter, 2011.

    RECOMMENDED ACTION: Receive and file.

15. Design/Build ADA Compliant Synthetic Safety Surfaced Ball Diamond at Orchard Park. (District V)

    RECOMMENDED ACTION: Approve the vendor selection, accept the donation from the Love of Chance Foundation, approve the contract and scope of services and authorize all necessary signatures.

16. Removal of Nuisance Abatement Special Property Tax Assessment, 1832 North Lorraine Street. (District I)

    RECOMMENDED ACTION: Approve removal of the $205 nuisance abatement special property tax assessment, plus filing fees and accrued interest charges, for the property at 1832 North Lorraine Street.

17. Midwest Financial Investigations Task Force.

    RECOMMENDED ACTION: Approve the agreements and authorize the Mayor to sign.

18. Resolutions Authorizing Congestion Mitigation and Air Quality (CMAQ) Grant from the Federal Transit Administration.

    RECOMMENDED ACTION: Approve the resolutions and the agreement and authorize the necessary signatures.

19. 47th Street South Improvement, between Lulu and Hydraulic. (District III)

    RECOMMENDED ACTION: Approve the waiver of the Use of Project Savings Policy, approve the revised budget, place the amending ordinance on first reading and authorize the signing of State/Federal Agreements as required.

20. Kellogg, between Cypress and 159th Street East. (District II)

    RECOMMENDED ACTION: Find and declare, upon the request of the Mayor, that a public emergency exists, requiring the final passage of the amending ordinance on the date of its introduction, adopt the amending ordinance and authorize the necessary signatures.

21. Hawker Beechcraft and Wichita Radio Control Club donation of Chapin Park Remote Controlled Flying Field Improvements. (District III)

    RECOMMENDED ACTION: Accept the donation, approve the Memorandum of Understanding and authorize all necessary signatures.

22. Notice of Intent to Use Debt Financing - 1980 Airport Road Roof Replacement - Wichita Mid-Continent Airport.

    RECOMMENDED ACTION: Adopt the Resolution and authorize the necessary signatures.

23. Second Reading Ordinances: (First Read August 23, 2011)
    a. List of Second Reading Ordinances. (See Attached)

    RECOMMENDED ACTION: Adopt the Ordinances.

II. CONSENT PLANNING AGENDA ITEMS

NOTICE: Public hearing on planning items is conducted by the MAPC under provisions of State law. Adopted policy is that additional hearing on zoning applications will not be conducted by the City Council unless a statement alleging (1) unfair hearing before the MAPC, or (2) alleging new facts or evidence has been filed with the City Clerk by 5p.m. on the Wednesday preceding this meeting. The Council will determine from the written statement whether to return the matter to the MAPC for rehearing.

24. *ZON2011-00023 – City zone change from SF-5 Single-Family Residential to TF-3 Two-Family Residential; generally located south of Maple Street, on the west side of Sheridan Avenue and north of University Avenue. (District IV)

    RECOMMENDED ACTION: Adopt the findings of the MAPC and approve the zone change, authorize the Mayor to sign the ordinance and place the ordinance on first reading (simple majority required).

25. *ZON2000-00045 – Extension of time to complete the platting requirement for a zone change from SF-5 Single-Family Residential ("SF-5") to LC Limited Commercial ("LC") generally located south of Central and west of Tyler Road. (District V)

    RECOMMENDED ACTION: Approve a one-year extension of time to complete platting by September 13, 2012.

26. *SUB2011-00026 -- Plat of Lord's Diner South Hillside Addition located north of 31st Street South on the west side of Hillside. (District III)

    RECOMMENDED ACTION: Approve the documents and plat, authorize the necessary signatures and place the Ordinance on first reading.

27. *A11-03 – Request by Michael E. and Kathy K. Smith to annex lands generally located one-half mile north of 21st Street North on the west side of 159th Street East. (District II)

    RECOMMENDED ACTION: Approve the annexation request, place the annexation and zone change ordinances on first reading, authorize the necessary signatures and instruct the City Clerk to publish the ordinances after approval on second reading.

II. CONSENT HOUSING AGENDA ITEMS

NOTICE: The City Council is meeting as the governing body of the Housing Authority for consideration and action on the items on this Agenda, pursuant to State law, HUD, and City ordinance. The meeting of the Authority is deemed called to order at the start of this Agenda and adjourned at the conclusion.

Fern Griffith, Housing Member is also seated with the City Council.

None

II. CONSENT AIRPORT AGENDA ITEMS

NOTICE: The City Council is meeting as the governing body of the Airport Authority for consideration and action on items on this Agenda, pursuant to State law and City ordinance. The meeting of the Authority is deemed called to order at the start of this Agenda and adjourned at the conclusion.

28. *1980 Airport Road Roof Replacement - Wichita Mid-Continent Airport.

    RECOMMENDED ACTION: Initiate the project and approve the budget.

29. *Federal Aviation Administration - Lease No. DTFASW-10-L-00268, Supplemental Agreement No. 3 - 2204 South Tyler Road - Wichita Mid-Continent Airport.

    RECOMMENDED ACTION: Approve the Supplemental Agreement and authorize the necessary signatures.

30. *Federal Aviation Administration - Lease No. DTFACN-12-L-00014 - 1801 Airport Road - Wichita Mid-Continent Airport.

    RECOMMENDED ACTION: Approve the Agreement and authorize the necessary signatures.

31. *AOPA Insurance Agency, Inc. - Lease Agreement for Office Use of 1995 Midfield Road - Wichita Mid-Continent Airport.

    RECOMMENDED ACTION: Approve the Agreement and authorize the necessary signatures.

Agenda Item No. III-1

City of Wichita
City Council Meeting
September 13, 2011

TO: Mayor and City Council

SUBJECT: Repair or Removal of Dangerous & Unsafe Structures
1209 North Jackson (District VI)

INITIATED BY: Office of Central Inspection

AGENDA: Unfinished Business

Recommendations: Take appropriate action based on testimony received during the review hearing to consider condemnation and removal of dangerous and unsafe structures at 1209 North Jackson.

Background: On February 1, 2011, the City Council conducted a public hearing to consider condemnation of the dangerous and unsafe structures at 1209 North Jackson.

City Council Member Janet Miller made a motion to defer City Council action for sixty days to allow time for potential buyers interested in repairing the house to make contact with the owner.

The property was scheduled for City Council review on April 5, 2011. Council Member Miller advised she had been in contact with a potential buyer for this property and would like to extend the date for City Council review. The dangerous building condemnation hearing was postponed to June 7, 2011.

On June 7, 2011, the property was again presented to the City Council. City Council Member Janet Miller made a motion to proceed with condemnation and demolition. The motion passed.

On August 2, 2011, staff checked with the Sedgwick County Treasurers Office and found that the property has been scheduled for tax sale on October 17, 2011. Council Member Miller requested the property be returned to City Council for reconsideration of the resolution made on June 7, 2011.

Analysis: Staff inspected the property on August 3, 2011. No repairs had been made and the structures were secured. There was some scattered debris, tires and tall grass and weeds on the premises. It should be noted that a tall grass and weeds case was initiated on July 14, 2011.

As of August 22, 2011, the 2006, 2007, 2008, 2009 and 2010 taxes were delinquent in the amount of $6,696.93, which includes interest.

There are two 2010 special assessments. One is for weed cutting in the amount of $124.21 and the other is for board-up in the amount of $183.62, both include interest.

There are two 2011 special assessments. One is for weed cutting in the amount of $126.68 and the other is for board-up in the amount of $203.94, both include interest.

Financial Considerations: Structures condemned as dangerous buildings are demolished with funds from the Office of Central Inspection's Special Revenue Fund contractual services budget, as approved annually by the City Council. This budget is supplemented by an annual allocation of federal Community Development Block Grant funds for demolition of structures located within the designated Neighborhood Reinvestment Area. Expenditures for dangerous building condemnation and demolition activities are tracked to ensure that City Council Resolution No. R-95-560, which limits OCI expenditures

for non-revenue producing condemnation and housing code enforcement activities to 20% of OCI's total annual budgeted Special Revenue Fund expenditures, is followed. Owners of condemned structures demolished by the City are billed for the contractual costs of demolition, plus an additional $500 administrative fee. If the property owner fails to pay, these charges are recorded as a special property tax assessment against the property, which may be collected upon subsequent sale or transfer of the property.

Goal Impact: This agenda item impacts the goal indicator to Support a Dynamic Core Area and Vibrant Neighborhoods. Dangerous building condemnation actions, including demolitions, remove blighting and unsafe buildings that are detrimental to Wichita neighborhoods.

Legal Considerations: The owner and owner's representative has been informed of the date and time of the hearing.

Recommendations/Actions: It is recommended that the City Council take appropriate action based on the testimony received at the hearing. Any extension of time granted to repair the structure should be conditioned on the following: (1) taxes and specials are paid as of September 13, 2011; (2) the structures are maintained secure as of September 13, 2011 and is kept secured during renovation; and (3) the premise is kept clean and free of debris as of September 13, 2011, and is so maintained during renovation.

If any of the above conditions are not met, the Office of Central Inspection will proceed with demolition action and also instruct the City Clerk to have the resolution published once in the official City paper and advise the owners of these findings.

Attachments: None

Agenda Item No. III-2

City of Wichita
City Council Meeting
September 13, 2011

TO: Mayor and City Council

SUBJECT: Repair or Removal of Dangerous & Unsafe Structure
1715 North Chautauqua (District I)

INITIATED BY: Office of Central Inspection

AGENDA: Unfinished Business

Recommendations: Take appropriate action based on information received during the review hearing to consider condemnation and removal of the dangerous and unsafe structure at 1715 North Chautauqua.

Background: On January 4, 2011, the City Council conducted a hearing to review and consider condemnation, demolition and removal of the vacant single family house at 1715 North Chautauqua.

At the hearing, City Council Member Lavonta Williams made a motion to defer action for thirty days to allow Mr. Craig Gable time to determine feasibility of repairs. If it was determined with staff that repairs could not be made, then staff was to return the property to the City Council for condemnation and demolition action.

On February 23, 2011, OCI staff contacted Mr. Craig Gable and requested an update on the property as directed by the City Council on January 4, 2011. At that time an extension was authorized until March 22, 2011.

On March 22, 2011, OCI staff contacted Mr. Craig Gable and requested an update on the property. He informed staff that the property was purchased mid-March 2011. He advised that the premises had been cleaned. The property had been secured and Mr. Gable stated that the repairs should be completed by April 11, 2011. Staff granted an extension of time to complete repairs until April 11, 2011.

On April 8, 2011, Mr. Gable called to request a two week extension. He advised that he was waiting for materials that were on order. An extension was granted until April 25, 2011.

On May 5, 2011, staff inspected the property and found that the exterior repairs were not completed and that repairs that had been made were of marginal quality. Staff informed City Council Member Lavonta Williams of the findings and asked for further direction. Since the property was not repaired as per prior City Council direction, the property is being returned for City Council review and action.

Analysis: Staff inspected the property on August 25, 2011. No further repairs had been made and the structure was secured. There was some tree debris on the premises.

As of August 22, 2011, there is a 2011 special assessment for weed cutting in the amount of $126.68, which includes interest.

Financial Considerations: Structures condemned as dangerous buildings are demolished with funds from the Office of Central Inspection's (OCI) Special Revenue Fund contractual services budget, as approved annually by the City Council. This budget is supplemented by an annual allocation of federal Community Development Block Grant funds for demolition of structures located within the designated Neighborhood Reinvestment Area. Expenditures for dangerous building condemnation and demolition

activities are tracked to ensure that City Council Resolution No. R-95-560, which limits OCI expenditures for non-revenue producing condemnation and housing code enforcement activities to 20% of OCI's total annual budgeted Special Revenue Fund expenditures, is followed. Owners of condemned structures demolished by the City are billed for the contractual costs of demolition, plus an additional $500 administrative fee. If the property owner fails to pay, these charges are recorded as a special property tax assessment against the property, which may be collected upon subsequent sale or transfer of the property.

Goal Impact: This agenda item impacts the goal indicator to Support a Dynamic Core Area and Vibrant Neighborhoods. Dangerous building condemnation actions, including demolitions, remove blighting and unsafe buildings that are detrimental to Wichita neighborhoods.

Legal Considerations: The owner and representative of the bank have been informed of the date and time of the hearing.

Recommendations/Actions: It is recommended that the City Council take appropriate action based on the testimony received at the hearing. Any extension of time granted to repair the structure should be conditioned on the following: (1) special assessment is paid as of September 13, 2011 or shortly thereafter; (2) the structure is maintained secure as of September 13, 2011 and is kept secured during renovation; and (3) the premise is kept clean and free of debris as of September 13, 2011, and is so maintained during renovation.

If any of the above conditions are not met, the Office of Central Inspection will proceed with demolition action and also instruct the City Clerk to have the resolution published once in the official City paper and advise the owners of these findings.

Attachments: None

City of Wichita
City Council Meeting
September 13, 2011

TO: Mayor and City Council

SUBJECT: Public Hearings for Douglas Place TIF Project Plan, Community Improvement District and Façade Improvements (District I)

INITIATED BY: Office of Urban Development

AGENDA: New Business

Recommendations: Close the public hearings, place on first reading the ordinances, place on first reading the amended charter ordinance, accept the façade improvement easement and approve the development agreement for the Douglas Place Project.

Background: On May 17, 2011, the City Council approved the Downtown Incentives Policy which established procedures and requirements for the use of public incentives for downtown development projects. The first project to go through the process outlined in the Policy is the Douglas Place Project, submitted by Douglas Place, LLC, a development group comprised of Marketplace Properties LLC, Summit Holdings LLC and the Coury Properties LLC (the "Developer").

The Developer has submitted an application for public incentives in Project Downtown to help renovate the Douglas Building at the southeast corner of Douglas and Broadway at 104 South Broadway, into a 117-room upscale boutique hotel, to be named the Ambassador Hotel. The complete historic renovation of the 14-story former Union National Bank building will include a lobby and restaurant/bar on the 1st floor and large banquet facilities on the 2nd floor and will commemorate the first civil rights lunch counter sit-in which occurred in 1958 at the Dockum Drug Store which was located in this building. The Developer is also requesting construction of a 282-stall public parking garage including 8,400 square feet of retail space and an urban park on land to the south of the Douglas Building to be purchased by the City from the Slawson Company.

On August 9, 2011, the City Council approved a Letter of Intent for the incentive package described below and set a public hearing to consider adoption of a TIF redevelopment project; and on August 23, 2011, the City Council accepted petitions and adopted resolutions setting public hearings to consider approval of a community improvement district and façade improvements for the Project. Both council actions set September 13, 2011 as the date of public hearing for the respective items.

Analysis: The Douglas Place Project incentives application has been evaluated by the Downtown Incentives Evaluation Team, a public-private team appointed by the City Manager under the provisions of the Downtown Development Incentives Policy, using a scoring matrix that focuses on project characteristics, public benefits and developer qualifications. The Evaluation Team has recommended approval of the following incentives:

- Tax increment financing (TIF) and capital improvement program (CIP) funding for development of a 282-space public parking structure with retail space and an urban park at a cost not-to-exceed $7,570,000
- Industrial revenue bond (IRB) financing and sales tax exemption on renovation construction costs and furniture, fixtures and equipment (FF&E) in an amount not-to-exceed $22,000,000
- Special assessment financing for façade improvements at an estimated cost of $2,045,000
- Rebate of 75% of the hotel guest tax generated by the Ambassador Hotel for 15 years
- Pay-as-you-go pass-through of a 2% Community Improvement District (CID) sales tax

Combined Sources and Uses of Project Funding

Sources of Funds	Private Funds	Public Funds	Total Funds
Developer Bank Loan	$12,700,000		$12,700,000
Developer Equity	7,715,000		7,715,000
Façade Special Assessments	1,500,000		1,500,000
Tax Increment Financing		$2,920,000	2,920,000
Capital Improvement Program		4,650,000	4,650,000
Total Sources of Funds	$21,915,000	$7,570,000	$29,485,000

Uses of Funds	Private Uses	Public Uses	Total Uses
Land Acquisition	$2,600,000	$770,000	$3,370,000
Historic Building Renovation	14,575,000		14,575,000
Parking Facility with Retail Space		6,000,000	6,000,000
Urban Park Construction		800,000	800,000
Furnishings, Fixtures & Equipment	1,375,000		1,375,000
Soft Costs	1,905,000		1,805,000
Financing and Contingency	1,560,000		1,560,000
Total Uses of Funds	$21,915,000	$7,570,000	$29,485,000

Tax Increment Financing (TIF)

The Developer is seeking the use of TIF as part of the financing of a public parking garage to be partially used by the hotel, with the balance of the costs proposed to be financed by funding from the City's Proposed CIP. The Project is located within the Center City South Redevelopment District, which was expanded in 2008 to include the project area. Use of TIF requires adoption of a TIF project plan by a two-thirds majority vote of the City Council. The attached Project Plan has been prepared in consultation with the Wichita-Sedgwick County Metropolitan Area Planning Commission, which has made a finding that the project is consistent with the Comprehensive Plan for development of the area. The Project Plan identifies the TIF project area as the city block bounded by Douglas, Broadway, William and Topeka, and includes a financial feasibility study.

The sources and uses of funds to be used for construction of the parking facility and urban park are as follows:

Sources :	Tax Increment Financing	$2,920,000
	Capital Improvement Program	4,650,000
	Total Sources	$7,570,000
Uses:	Land Acquisition	$770,000
	Parking Structure Construction	6,000,000
	Urban Park Construction	800,000
	Total Uses	$7,570,000

TIF uses the increase in property tax revenue from the growth in property value that results from redevelopment to pay the principal and interest payments on City bonds issued to finance a portion of the eligible project costs. By agreement with Sedgwick County, only 70% of TIF revenue may be used for eligible project costs in the Center City South expansion area. The growth in property value is measured from the value in the year the TIF district was first established and the tax revenue is measured using city,

county and school district tax levies, excluding the 20-mill statewide education levy. The following table summarizes the TIF financial feasibility:

2007 Assessed Valuation	$225,445
Projected 2015 Assessed Valuation	$4,583,750
Projected Valuation reserved for Arena Phase 1 Project	$262,227
Captured Assessed Valuation	$4,096,078
Applicable Mill Levy	98.559 mills
Estimated 2016 TIF Revenue (70%)	$340,000
Projected 2016 TIF Bond Debt Service Payment	$262,000
Debt Service Coverage Ratio	1.3 to 1

After closing the public hearing on September 13th, the City Council may adopt the TIF Project Plan by ordinance, by two-thirds majority vote. Once the ordinance is adopted and transmitted to the County Clerk, the City will be authorized to use tax increment financing to finance eligible project costs.

Community Improvement District (CID)

The Developer has requested the establishment of a CID to provide pay-as-you-go financing for qualified Project costs through imposition of a 2% special retail sales tax on all taxable retail sales within the Ambassador Hotel for a maximum term of 22 years. The eligible project costs identified in the CID petition include costs of renovating the Douglas Building into the Ambassador Hotel. The maximum amount of Project costs that can be reimbursed is $2,045,000, based on 125% of projected CID tax revenue.

To establish a CID upon receipt of a valid petition, the City Council must hold a public hearing on the matter following the giving of proper notice, including publication of the resolution setting the hearing and sending the resolution by certified mail to all owners of land within the proposed district. After closing the public hearing, the City Council may adopt an ordinance establishing the district and imposing the CID tax. Pursuant to a CID development agreement entered into concurrently, the City will transmit the ordinance to the Kansas Department of Revenue upon instructions from the developer, at which time the CID tax will begin to be collected. CID tax revenues will be passed through to the developer based on documented expenditures for qualified Project costs, on a pay-as-you-go basis.

Façade Improvements

The Façade Improvement Program provides low-cost loans to enhance the visual aesthetics of buildings located in defined areas needing revitalization, including the City's core area. The façade loans are funded with the proceeds of general obligation bonds that are repaid by special assessment taxes over a 15-year period. The Douglas Place Developer has submitted a special assessment petition to use the Façade Program to finance improvements to three of the building's exterior walls that are adjacent to public rights-of-way, including Douglas and Broadway Avenues and the east-west alleyway on the south side of the building, in the aggregate total amount of $1,500,000.

The process for approving a façade improvement project includes approval of the petition by the City Council and adoption of the resolution, which makes a finding that the project is advisable and sets a public hearing to consider adoption of a maximum assessment ordinance to legally assess the façade project costs to the property. After adoption of the maximum assessment ordinance, and satisfaction of other requirements, the City will fund certified construction draws up to the amount specified in the petition. Upon completion of the façade improvements, the City will issue bonds for the actual final costs and file the special assessment lien on property.

The City's Façade Program Policy requires that developers provide the City with acceptable surety, such as a letter of credit, to ensure that the City will be reimbursed for any façade expenditures in the event the project cannot be completed and therefore special assessment bonds cannot be issued. Without the issuance of bonds, the City cannot levy special assessment taxes on the improved property. The Douglas Place Developer has agreed to provide a letter of credit, provided that the project is subdivided into three phases each of which is capped at $500,000. Each phase requires separate authorization by petition and ordinance, which can be taken by a single action, and then each successive phase cannot start until the prior phase has been certified completed.

Transient Guest Tax Rebate

The Development Agreement summarized below includes a provision requiring the City to rebate to the Developer an amount equal to 75% of the transient guest tax revenue generated by the Ambassador Hotel for a period of 15 years. In order for this to be done legally, the City must amend the charter ordinance which dictates how the City can spend transient guest taxes and which provides for a priority order for the authorized expenditure purposes. The attached charter ordinance amendment adds the Ambassador Hotel rebate to the authorized uses, second in priority only to the use of transient guest tax revenue to pay City bonds. As a charter ordinance, the amendment will not be in effect until after the expiration of a 60-day protest period. If a petition signed by registered voters equal in number to 10% of the number of voters in the last citywide election, the ordinance will not be effective unless approved by voters at an election held within 90 days of the submittal of the petition. The current transient guest tax rate of 6% is scheduled to be reduced to 5% in 2015, unless extended. The Developer is aware of this contingency.

Capital Improvement Program (CIP) Financing

In addition to TIF, the remainder of parking garage and all of the urban park costs are proposed to be financed with funds from the Proposed CIP in the amount of $4,650,000, exclusive of the cost of temporary note interest. The Proposed CIP being considered for adoption by the City Council includes $10,000,000 in General Obligation (GO) funding in 2011 and 2012 for Downtown Infrastructure Projects, which will serve as the source of funding for this project. The attached bonding ordinance provides the authority to fund project costs with GO bonds funded from the Proposed CIP.

Industrial Revenue Bonds (IRB) and Sales Tax Exemption

The Letter of Intent approved on August 9, 2011 includes the issuance of IRBs in the amount not to exceed $22,000,000 to serve as a financing mechanism for the privately-funded portion of the Douglas Place Project in order to provide a sales tax exemption on construction materials and furnishings, fixtures and equipment. The IRBs will be issued following completion of the renovation project and will either be purchased by the Developer or its lenders or both. It is estimated that the sales tax exemption will save the Project approximately $537,075.

Development Agreement

The attached Development Agreement between the City, Douglas Place LLC and Slawson Investment Corporation ("Slawson") sets forth the agreement of the three parties with respect to the terms and conditions relating to the implementation of the Douglas Place Project as summarized below:

Design and Construction: The Project is divided into the "Developer Project" including the renovation of the Douglas Building and construction of the urban park, and the "City Project" consisting of construction of the parking structure including the retail space and adjacent alleyways. The agreement names WDM Architects and Ruggles & Bohm engineering firm as the overall Project design consultants and Key

Construction as the general contractor for the Developer Project, **including the Urban Park**. The general contractor for the City Project will be selected through the City's standard public bidding process. The City Representative (City Manager or his designee) must approve all City Project and Urban Park plans and specifications.

City staff considered the use of the Developer's contractor for both the Developer Project and the City Project. Potential advantages to using the same contractor include the efficient coordination of work occurring concurrently at adjacent project sites in close proximity, guarantees that final project costs will stay within the preliminary budget amounts and that both projects will be completed together and on time. Principal advantages to public bidding includes the opportunity for cost savings due to competitive bidding in a down construction economy, and the fairness of allowing all qualified firms to compete for publicly funded construction work. The close proximity of the Douglas Building and the urban park, and the fact that an element of the building renovation is actually located on urban park property, dictates that the same contractor be used for both projects. However, staff believes the parking structure can be bid without undue risk of late completion or cost coming in above preliminary estimates, and that coordination between the two project sites can be successfully managed.

Retail Space Lease: The City agrees to construct 8,400 square feet of retail space with minimal interior finishes and lease the space to the Developer on a triple-net basis for a 20-year term. The rent for the first five years is $1.00 per year, $21,000 per year for the next 10 years and $63,000 per year for the last five years. After the lease term has expired, the Developer will have the option to manage the property for the City for a 6% management fee or purchase the property for $1,120,000. In the attached Parking Structure Retail Space Lease Agreement, the Developer requests pre-approval of the assignment of the retail space lease to Slawson in order to foster retail development along the William Street corridor, including the former Henry's building.

Parking Arrangements: The Development Agreement incorporates separate parking agreements for spaces leased to the Developer and to Slawson. Under the attached Developer Parking Agreement, the City will lease 125 undesignated parking spaces in the parking garage to the Ambassador Hotel for a term of 50 years, for use by hotel guests and staff. Rent for the hotel parking spaces will be paid annual in arrears in an amount equal to 60% of the City's cost to operate the garage, capped at $75,000 per year for the first 10 years, after which the cap will increase by 3% per year.

Under the attached Slawson Parking Agreement, Slawson will have the option to lease up to 100 undesignated parking spaces for use from 8 a.m. to 5 p.m. by future tenants in the former Henry's building at Broadway and William and in the parking structure retail space. Monthly rent for Slawson spaces will be $30 per stall for the first 10 years and thereafter it will be the lesser of the amount charged in the City-owned State Parking Garage or the average rate charged in all downtown parking garages.

The garage will be equipped with an automated access system that will allow the City to track usage and manage the number of stalls available to the general public at any time to ensure adequate stalls are available to the hotel and to Slawson tenants pursuant to the agreement.

TIF Shortfall Guarantee: The City's Downtown Incentives Policy requires developers to provide a proportional guarantee of project revenues needed to pay for City incentives such as TIF, based on the share of incentives used that directly benefit the developers' projects. In this case, the Developer's share of the TIF-funded incentive is based on 125 parking stalls in a 282-stall garage, or 44%. Under the attached Tax Payment Agreement, the Developer has agreed to pay any difference between its actual taxes on the Douglas Building and $245,000 per year, which exceeds its proportional share of the debt service on TIF bonds. In addition, the Developer agrees not to protest the taxes on the building unless the valuation reflects a capitalization rate that exceeds the average rate for boutique hotels as determined by a nationally-recognized hotel appraisal firm.

Urban Park Maintenance: The City will be responsible for maintaining the "hardscape" elements in the urban park area and the Developer will be responsible to maintaining landscaping elements, including the irrigation system, plantings and any water feature in the park.

Conditions Precedent: Prior to proceeding with the funding of any project costs, including the acquisition of the Slawson land, the City Representative must be satisfied that the Developer's financing is firmly in place, including both debt and equity, and all other approvals required by the agreement to have been either obtained or waived. The sole exception to this rule is that the City will take assignment of the design contract for the parking structure and urban park and will continue funding preliminary design costs up to a maximum of $50,000.

Financial Considerations: The City has received $8,500 for the Project Downtown application fee and $5,000 for the CID application fee to defray City administrative costs of implementing the Project. The sources of funding for the City incentives are as follows:

- Full faith and credit (GO) tax increment financing bonds - $3,080,000 to pay a portion of the parking garage cost, including financing costs (based on issuing taxable bonds for public assets)
- General obligation bonds (CIP-GO) - $4,650,000 to pay a portion of the parking garage cost and the urban park cost (based on issuing tax-exempt bonds for public assets)
- Special assessment GO bonds – Estimated $1,500,000 to pay for Douglas Building façade improvements and asbestos/lead paint abatement
- 2% Community Improvement District (CID) sales tax revenue – pay-as-you-go pass-through payments to Douglas Place LLC
- Transient guest tax revenue– 75% of revenue generated by the hotel

Goal Impact: Economic Vitality and Affordable Living and Core Area and Neighborhoods. The vitality of the downtown area and the viability of the Century II Convention Center are directly impacted by maintaining first-class hotels in the Core Area.

Legal Considerations: The attached ordinances, the development agreement and the various agreements incorporated by reference in the development agreement have all been reviewed by the Law Department and approved as to form. The adoption of the **ordinances approving the** TIF project plan **and the development agreement** requires a two-thirds majority vote by the City Council. **Under Charter Ordinance No. 177, development agreements providing for selection of contractors on City-funded projects without public bidding (in this case, the Urban Park project) require approval by ordinance passed by a two-thirds majority vote.** The City Council may conduct the public hearings for the TIF Project Plan, the CID and the Façade Improvements concurrently.

Recommendation/Action: It is recommended that the City Council close the public hearings and:

1) Approve first reading of the ordinances **approving the development agreement,** adopting the TIF Project Plan, establishing the CID and levying the maximum façade assessments;
2) Approve first reading of the bonding ordinance;
3) Approve first reading of the amended charter ordinance for use of transient guest taxes;
4) Approve the Development Agreement;
5) Approve the CID Agreement;
6) Approve the Façade Easement;
7) Approve the Parking Structure Retail Space Lease;
8) Approve the Developer Parking Agreement;
9) Approve the Slawson Parking Agreement;
10) Approve the Tax Payment Agreement; and
11) Authorize the necessary signatures.

Attachment(s): TIF Project Plan
TIF Project Plan Ordinance
CID Ordinance
Façade Ordinances for Phases 1, 2 and 3
Façade Easement
Transient Guest Tax Charter Ordinance Amendment
Bonding Ordinance
Development Agreement
CID Agreement
Parking Structure Retail Lease
Developer Parking Agreement
Slawson parking Agreement
Tax Payment Agreement

Comprehensive Financing Feasibility Study for the

Douglas Place Project

within the

Center City South Redevelopment District

City of Wichita, Kansas

Table of Contents

	Page (s)
OVERVIEW…..……	1-2
GENERAL DESCRIPTION OF TAX INCREMENT ……	3
PROJECT DESCRIPTION …….	4
PROJECTED REVENUE (BENEFITS) …….	4-5
PROJECTED EXPENDITURES (COSTS) ……	6
CONCLUSIONS …….	6

Map of the Redevelopment District and Project Area……EXHIBIT I
Assumptions Report ……...EXHIBIT II
Projected Tax Increment Report ……EXHIBIT III
Projected Bond Cash Flow Report …….EXHIBIT IV

Overview

Sections 12-1770 through 12-1780d of the Kansas Statutes ("the Act") provide a means for cities to finance all or a portion of public infrastructure and redevelopment costs with incremental real estate and sales taxes. The purpose of the Act is to "promote, stimulate and develop the general and economic welfare of the State of Kansas and its communities, and to assist in the development and redevelopment of blighted areas and deteriorating areas which are not yet blighted, but may be so in the future, located within cities…".

A city may exercise the powers conferred under the Act provided that the governing body of the city has adopted a resolution finding that the specific area sought to be developed or redeveloped is a blighted area, a conservation area or was designated an enterprise zone prior to July 1, 1992. In addition, the city must find that the conservation, development or redevelopment of such an area is necessary to promote the general and economic welfare of the city.

One or more redevelopment projects may be undertaken within the District. Kansas Statutes require projects to be completed within 20 years from transmittal of the redevelopment project plan pursuant to K.S.A. 12-1776, with the exception of environmental investigation and remediation projects which must be completed within 20 years from the date the City enters into a consent decree with the Kansas Department of Health and Environment or the U.S. Environmental Projection Agency, unless the County and School District have expressly consented to a 10-year extension of the term.

For each redevelopment project undertaken within the District, a redevelopment project plan ("the Project Plan") must be prepared in consultation with the City Planning Commission. The Project Plan must include the following:

1. A summary or copy of the Comprehensive Financial Feasibility Study.

2. A reference to the statutorily required district plan for the District.

3. A description and map of the area to be redeveloped ("the Project").

4. The Relocation Assistance Plan (if applicable).

5. A detailed description of all buildings and facilities proposed to be constructed or improved.

6. Any other information the City deems necessary to advise the general public of the intent of the Project Plan.

The Comprehensive Financial Feasibility Study (this document) must show that the benefits derived from the specified redevelopment project will exceed the costs, and that the income therefrom will be sufficient to pay for the applicable project costs. Benefits are determined to be the aggregate revenues of the redevelopment project including increment income, assessment income, interest income, private party contributions and any other available funding sources. Costs are determined to be the total of eligible project expenditures as defined by K.S.A. 12-1770a, including the payment of principal and interest of debt used to finance the redevelopment project.

Pursuant to all the provisions of the Act, the City of Wichita has, by Ordinance No. 47-475 dated May 8, 2007, found a portion of the City was designated as an enterprise zone prior to July 1, 1992 and that redevelopment of the area is necessary to promote the general and economic welfare of the City. With adoption of Ordinance No. 47-475, the City established and designated such area as the Center City South Redevelopment District ("the District"). On December 9, 2008, by Ordinance No. 48-124, the City expanded the District. The District boundaries are shown in Exhibit I. Ordinance No. 48-124 also amended the statutorily required district plan for the redevelopment of the District, originally approved with Ordinance No. 47-475. The amended district plan limits TIF expenditures in the expanded district to those specified in the district plan.

The City is currently considering the adoption of a Project Plan for the proposed Douglas Place Project within the designated Center City South Redevelopment District ("the Project"). The Project consists of a complete historic renovation of a 14-story building into a 117 room boutique hotel, construction of an approximately 250-300 stall parking garage with ground floor retail and inclusion of an urban park and walkway. Adoption of the Project Plan will allow the City to finance eligible project costs associated with the redevelopment of property located on the block southeast of Douglas and Broadway Avenues (the "Project Area") as depicted in Exhibit I. Specifically, the City will purchase land for the parking garage and urban park, fund up to $6,000,000 for the construction of the garage, and fund up to $800,000 for the urban park and walkway as its contribution to the Project.

The City will provide public funding, including but not limited to, tax increment financing to finance purchase of the land, construction of the garage, development of an urban park and various public improvements. The City will enter into a development agreement with Douglas Place L.L.C. to develop and operate the garage and retail.

General Description of Tax Increment

Property tax increment financing involves the creation of an increment (increase over a base value) in the real estate taxes that are generated from a defined geographic area of a community. Upon establishment of a redevelopment district, the total assessed value of all taxable real estate within the district for that year is determined. This valuation is referred to as the district's "Original Assessed Value." Property taxes attributable to the district's Original Assessed Value are annually collected and distributed by the county treasurer to the appropriate city, county, school district and all other applicable taxing jurisdictions in the same manner as other property taxes.

As new development occurs within the redevelopment district, the total assessed value of the district, in any given year, will normally exceed its Original Assessed Value. Property taxes generated by applying the sum of the property tax rates of all applicable taxing jurisdictions to the incremental increase in assessed value (over and above the Original Assessed Valuation) is referred to as the "property tax increment". All property tax increment is collected by the County and distributed to the City to be deposited in a special tax increment fund.

Sales tax increment financing involves the creation of an increment (increase over a base value) in the local sales taxes that are generated from a defined geographic area of a community. Upon establishment of a redevelopment district, a base value of local sales tax collections within the district is determined. As new commercial development occurs within the redevelopment district, sales tax collections are expected to increase above the base value. Pursuant to city law governing the use of local sales tax revenue, the City does not intend to collect incremental sales tax revenues as "sales tax increment".

Tax increment funds may only be used to pay for certain statutorily-defined eligible project costs, including principal and interest on debt issued, in whole or in part, to finance eligible project costs within the redevelopment district. Such debt includes notes, special obligation bonds, full faith and credit tax increment bonds, and other debt instruments. The City intends to issue its full faith and credit tax increment bonds to finance Douglas Place Project costs that are eligible for tax increment financing, including land acquisition and construction of a public parking structure.

Project Description

The Douglas Place project area consists of three office buildings and parking lots that occupy half the block. Two of the three buildings have been vacant for an extended period of time. Redevelopment will consist of historic renovation of the Douglas Place building into a 117 room boutique hotel and development of an urban park and walkway between the Project building and Henry's building to the south. The parking lot on the southeast corner of the block will be developed into a 250-300 stall public parking structure.

Projected Revenues (Benefits)
Captured Assessed Value

It is the City's intention to use the property tax increment generated by the District to pay the debt service on general obligation bonds issued by the City to finance a portion of its contribution to the Project. The property tax increment is based on the District's increase in assessed value over its Original Assessed Value. The increase in value is expected to be recorded in January in the years 2012- 2015 and is referred to as the Captured Assessed Value.

The Total Assessed Value for the Project Area as of January 1, 2015 is estimated to be $4,583,750. The Original Assessed Value of the Project Area, as assessed in January 2007 for taxes payable in 2007-2008, is $225,445, according to data provided by the City of Wichita Geographic Information Service Office. A portion of the assessed value attributed to appreciation of the property from 2007-2010 ($262,227) has been captured for use in the Arena Phase I project. Therefore, the Captured Assessed Value of the TIF District as of January 1, 2015 is $4,096,078.

For the purpose of this analysis, it is assumed that the Total Assessed Value of the District will increase during the life of the project period at the annual inflation rate of 2%.

Property Tax Rates

In order to determine the amount of tax increment generated by the District in any given year, the Captured Assessed Value of the District must be multiplied by the sum of the tax rates for all *applicable* taxing jurisdictions for that year. For taxes levied in 2010 and payable in 2011, the applicable rate is 98.559 mills as shown below. The State of Kansas rate of 1.5 mills and the statewide education levy of 20 mills are not applicable to TIF and have been omitted from the following total:

Jurisdiction	Mill Rate (2010)
City of Wichita	32.272
Sedgwick County	29.359
USD No. 259	36.928
TIF-Applicable Mill Rate	98.559

Projected Property Tax Increment and Other Project Revenue

The projected property tax increment generated by the District is shown in column 8 of Exhibit III. Such projections are based on captured assessed values derived from captured assessed valuations and tax rates as previously discussed. It is assumed that Project construction will begin in early 2012 and be completed before the end of 2012, with full occupancy by 2014, and therefor achieve full valuation by January 1, 2015. It is estimated that the full property tax increment will be $425,925 starting in 2015

The City and Sedgwick County have committed to an agreement for funding TIF projects in the expanded Center City South area. Under the terms of the District Plan, 70% of tax increment revenue from the expanded area of the Redevelopment District will be used for tax increment financing. The remaining 30% will be redistributed, using the existing mill levy formula, to the City, County and School District. The City intends to reinvest its portion of the 30% redistribution towards payment of the TIF bonds (column 10 of Exhibit III). It is estimated that the 70% portion to be used for tax increment revenue will be $298,147 and the City's reinvested portion will be $41,839 for a total of $339,987.

All tax increment shall be allocated and paid by the Sedgwick County Treasurer to the City Treasurer in the same manner and at the same time as normal property taxes. All such incremental taxes must be deposited in a special fund of the City for the payment of eligible redevelopment costs.

Projected Expenditures (Costs)

A projected budget for the eligible project costs in the Project Area is listed below.

Sources	
Par Amount of TIF Bonds	$ 2,920,000
CIP funding	4,805,000
	$ 7,725,000
Uses	
Land Acquisition	$770,000
Urban Park and Walkway	800,000
Public Parking Garage	6,000,000
Financing and Other Costs	155,000
	$7,725,000

It is anticipated that all eligible project costs will be financed with general obligation (full faith and credit) tax increment financing bonds issued by the City. Exhibit IV illustrates a $2,920,000 taxable general obligation tax increment bond issue sold in 2014.

Conclusions

Kansas Statutes require that the Comprehensive Financial Feasibility Study must demonstrate that the benefits derived from the Project will exceed the costs, and that the income therefrom will be sufficient to pay for all eligible project costs. As previously discussed, Exhibit III illustrates the projections of tax increment through the year 2030. Projected net tax increment revenue is available to pay debt service on full faith and credit tax increment financing bonds issued to finance eligible project costs designated for such financing.

Exhibit IV (Projected Bond Cash Flow Report) illustrates that projected tax increment from the District will be sufficient to pay for all eligible project costs including the projected debt service on general obligation bonds issued to finance such costs. As such, this report demonstrates that the revenues (benefits) of the District and Project Area exceed the expenditures (costs).

EXHIBIT "I"

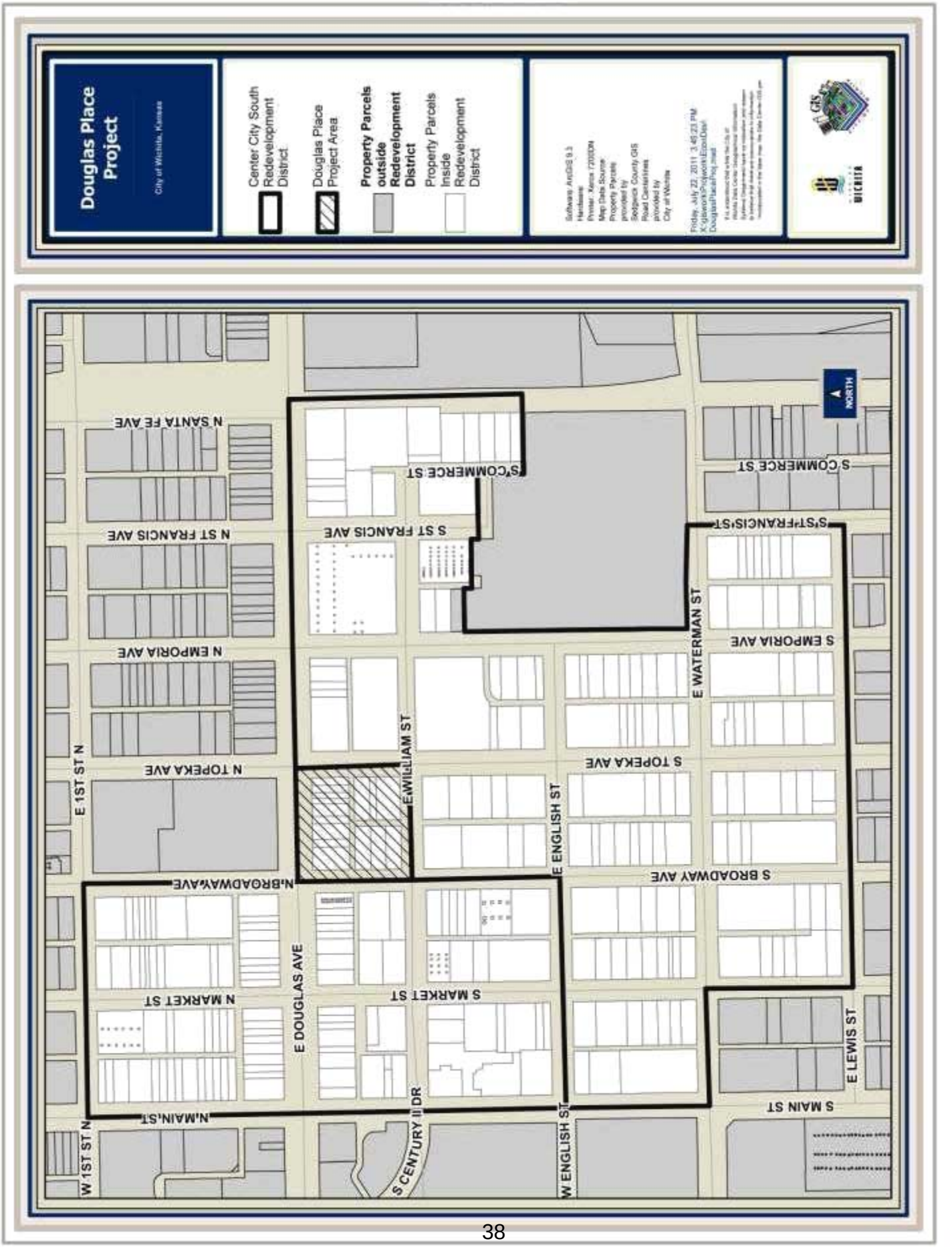
Douglas Place Project
City of Wichita, Kansas
Center City South Redevelopment District
Douglas Place Project Area
Property Parcels outside Redevelopment District
Property Parcels Inside Redevelopment District
Software: ArcGIS 9.3
Hardware:
Printer: Xerox 7200DN
Map Data Source:
Property Parcels provided by Sedgwick County GIS
Road Centerlines provided by City of Wichita
Friday, July 22, 2011 3:45:23 PM
K:\giswork\Projects\ExpoDist\DouglasPlaceProj.mxd
GIS
WICHITA
NORTH
N SANTA FE AVE
N ST FRANCIS AVE
N EMPORIA AVE
N TOPEKA AVE
E 1ST ST N
N BROADWAY AVE
N MARKET ST
W 1ST ST N
N MAIN ST
S COMMERCE ST
S ST FRANCIS AVE
E WILLIAM ST
E DOUGLAS AVE
S MARKET ST
S CENTURY II DR
E ENGLISH ST
W ENGLISH ST
S ST FRANCIS ST
E WATERMAN ST
S EMPORIA AVE
S TOPEKA AVE
S BROADWAY AVE
E LEWIS ST
S MAIN ST

Assumptions Report

City of Wichita, Kansas
Center City South Redevelopment District
Douglas Place Project

Description of Project Area	See Map (Exhibit I)
Original Appraised Value (1/1/07)	$3,126,260
Original Assessed Value (1/1/07)	225,445
2015 Appraised Value (1/1/15)	$25,989,200
2015 Assessed Value (1/1/15)	4,096,078

2010 Mill Rates (2011 Pay)	Total	TIF Applicable
City of Wichita	32.272	32.272
Sedgwick County	29.359	29.359
USD No. 259	56.928	36.928
State of Kansas	1.500	NA
SSMID	5.959	NA
Total	126.018	98.559

Property Value Inflation Rate	2%

Projected Tax Increment Report

City of Wichita, Kansas
Center City South Redevelopment District
Douglas Place Project

Levy & Appraised Year (1)	Year Taxes Distributed (2)	Total Assessed Value (3)	Original Assessed Value (4)	Arena Phase I Value Not Included (5)	Captured Assessed Value (6)	Mill Rate (7)	Tax Increment Collected (a) (8)	70% Allocation to Debt Service (9)	City of Wichita Revenue (10)	TIF Revenue Available for Debt Service (11)
2011	2012	1,145,938	225,445	242,257	903,680	98.559	89,066	62,346	8,749	71,095
2012	2013	1,145,938	225,445	247,102	898,835	98.559	88,588	62,012	8,702	70,714
2013	2014	3,491,750	225,445	252,044	3,239,706	98.559	319,302	223,512	31,366	254,877
2014	2015	3,959,750	225,445	257,085	3,702,665	98.559	364,931	255,452	35,848	291,299
2015	2016	4,583,750	225,445	262,227	4,321,523	98.559	425,925	298,147	41,839	339,987
2016	2017	4,675,425	225,445	267,471	4,407,954	98.559	434,443	304,110	42,676	346,786
2017	2018	4,768,934	225,445	272,821	4,496,113	98.559	443,132	310,193	43,530	353,722
2018	2019	4,864,312	225,445	278,277	4,586,035	98.559	451,995	316,397	44,400	360,797
2019	2020	4,961,598	225,445	283,843	4,677,756	98.559	461,035	322,724	45,288	368,013
2020	2021	5,060,830	225,445	289,520	4,771,311	98.559	470,256	329,179	46,194	375,373
2021	2022	5,162,047	225,445	295,310	4,866,737	98.559	479,661	335,763	47,118	382,880
2022	2023	5,265,288	225,445	301,216	4,964,072	98.559	489,254	342,478	48,060	390,538
2023	2024	5,370,594	225,445	307,241	5,063,353	98.559	499,039	349,327	49,021	398,349
2024	2025	5,478,006	225,445	313,385	5,164,620	98.559	509,020	356,314	50,002	406,316
2025	2026	5,587,566	225,445	319,653	5,267,913	98.559	519,200	363,440	51,002	414,442
2026	2027	5,699,317	225,445	326,046	5,373,271	98.559	529,584	370,709	52,022	422,731
2027	2028	5,813,303	225,445	332,567	5,480,736	98.559	540,176	378,123	53,062	431,185
2028	2029	5,929,569	225,445	339,218	5,590,351	98.559	550,979	385,686	54,124	439,809
2029	2030	6,048,161	225,445	346,003	5,702,158	98.559	561,999	393,399	55,206	448,605

EXHIBIT III

Projected Bond Cash Flow Report

City of Wichita, Kansas
Center City South Redevelopment District
Douglas Place Project

Annual Period Ending (1)	Principal (2)	G.O. Interest Rate (3)	Interest (4)	P&I (5)	Net Tax Increment (7)	Annual Balance (8)	Cumulative Balance (9)
9/1/2012	55,000	6.00%	-	54,689	71,095	16,406	16,406
9/1/2013	55,000	6.00%	-	54,395	70,714	16,319	32,725
9/1/2014	100,000	6.00%	94,556	196,059	254,877	58,818	91,543
9/1/2015	40,000	6.00%	184,743	224,076	291,299	67,223	158,767
9/1/2016	80,000	6.00%	179,450	261,528	339,987	78,459	237,225
9/1/2017	95,000	6.00%	172,903	266,759	346,786	80,027	317,253
9/1/2018	105,000	6.00%	165,823	272,094	353,722	81,628	398,881
9/1/2019	120,000	6.00%	158,169	277,536	360,797	83,261	482,142
9/1/2020	135,000	6.00%	149,894	283,087	368,013	84,926	567,067
9/1/2021	150,000	6.00%	140,946	288,748	375,373	86,625	653,692
9/1/2022	165,000	6.00%	131,272	294,523	382,880	88,357	742,049
9/1/2023	180,000	6.00%	120,812	300,414	390,538	90,124	832,173
9/1/2024	195,000	6.00%	109,503	306,422	398,349	91,927	924,100
9/1/2025	215,000	6.00%	97,276	312,550	406,316	93,766	1,017,866
9/1/2026	235,000	6.00%	84,056	318,802	414,442	95,640	1,113,506
9/1/2027	255,000	6.00%	69,762	325,178	422,731	97,553	1,211,058
9/1/2028	275,000	6.00%	54,308	331,681	431,185	99,504	1,310,563
9/1/2029	300,000	6.00%	37,599	338,315	439,809	101,494	1,412,057
9/1/2030	325,000	6.00%	19,533	345,081	448,605	103,524	1,515,581
	3,080,000		1,970,605	5,051,937	6,567,518	1,515,581	

District Plan

EXHIBIT "C"

DISTRICT PLAN FOR THE REDEVELOPMENT OF THE CENTER CITY SOUTH REDEVELOPMENT DISTRICT THROUGH TAX INCREMENT FINANCING

October 23, 2008

SECTION 1: PURPOSE

A district plan is required for inclusion in the establishment or expansion of a redevelopment district under K.S.A. 12-1771(a). The district plan is a preliminary plan that identifies proposed redevelopment project areas within the district, and describes in a general manner the buildings and facilities to be constructed, reconstructed or improved.

SECTION 2: DESCRIPTION OF TAX INCREMENT FINANCING

Projects financed through tax increment financing typically involve the creation of an "increment" in real estate property tax revenue. The increment is generated by segregating the assessed values of real property located within a defined geographic area such that a portion of the resulting property taxes are paid to the City to fund one or more redevelopment projects in the redevelopment district, and the remaining portion is paid to all taxing jurisdictions. The portion of property taxes paid to the City in this way is determined by the increase in assessed value of the properties within the redevelopment district as a result of the new development occurring within the area. When the aggregate property tax rates of all taxing jurisdictions are applied to this increase in assessed property value, tax increment revenue is generated. Certain improvements within the district may be funded by the City and repaid over a specified period of time with this incremental revenue. The property taxes attributable to the assessed value existing prior to redevelopment, the "original valuation," are distributed to all taxing jurisdictions just as they were prior to redevelopment.

SECTION 3: BUILDINGS AND FACILITIES

The proposed redevelopment district is within the city limits of Wichita, Kansas. The district is generally bounded on the east by the Central Rail Corridor, Emporia Avenue and St. Francis Street, on the south by Lewis and Waterman Streets, on the west by Market and Main Streets, and on the north by Douglas Avenue and 1st Street North. Property owned by Sedgwick County and used for the Intrust Bank Arena is excluded from the redevelopment district.

The area included in the proposed district qualifies as a conservation area under state law governing the use of tax increment financing. A majority of the buildings in the area are more than 50 years old, many of which were built before 1930. Except for the Douglas Avenue corridor, most of the proposed redevelopment district is less densely developed than the northern part of Downtown Wichita, with more low-rise office, retail and warehouse structures and open parking lots. Over the years, many of the higher-density buildings in the area have been removed, leading to a pattern of under-utilization of property. Many of the surviving older buildings are showing signs of delapidation and need of rehabilitation.

SECTION 4: REDEVELOPMENT

The proposed district is located in an important redevelopment area within the City of Wichita, surrounding the site of the new Sedgwick County Arena, which is located between Emporia Avenue and the railroad tracks, between William and Waterman Streets. The redevelopment of this area has been the object of a major land-use and redevelopment planning project, called the Arena Neighborhood Redevelopment Plan. The Plan identifies and recommends a variety of land uses and infrastructure improvements to influence and guide the redevelopment of the area that is expected as a result of the construction of the arena. The establishment of the proposed redevelopment district will provide an appropriate source of funding to assist the City in providing infrastructure improvements and partnering with private developers in bringing new developments to the area.

The Arena Neighborhood Redevelopment Plan has conceptually divided the redevelopment district into four major redevelopment project areas, each with a distinct redevelopment goal. The ***Douglas Avenue Corridor District***

project area is located generally in the norther portion of the redevelopment district along Douglas Avenue and for which the redevelopment goal is to be a high intensity business corridor, primarily office and support commercial uses with upper level residential opportunities. The goal of the ***English/William Street District*** project area which is located generally in the center portion of the redevelopment district along English Street and William Street is to be a walkable urban mixed-use district of primarily commercial and office uses as well as public and residential uses. The ***Broadway Neighborhood District*** project area which is located generally in the southern portion of the redevelopment district and includes the area from Waterman to Kellogg and from Main to Emporia. Its goal is to redevelop as an urban residential environment with support commercial opportunities serving residents and Kellogg users. The ***Commerce Street Arts District*** project area which is located generally in the eastern portion of the redevelopment district and is to be a unique experiential arts area with live / work studio opportunities.

It is anticipated that there will be a number of individual redevelopment projects undertaken within the proposed redevelopment district, which will qualify for assistance from tax increment financing. Several are currently in various stages of preparation at this time. Projects will include mixed-use developments, residential, office, retail, entertainment, hotels and other uses. They will include demolition and new construction as well as rehabilitation of existing buildings.

SECTION 5: USE OF TAX INCREMENT FINANCING

Tax increment financing may generally be used for property acquisition, site preparation, utilities, drainage, street improvements, streetscape amenities, public outdoor spaces, landscaping and parking facilities in the redevelopment district; provided, however, that within the expansion area being added to the original Center City South Redevelopment District, which was established on May 8, 2007, by Ordinance No. 47-475, it is the expressed intent of the City of Wichita to limit the use of tax increment financing within the expansion area of the Center City South Redevelopment District to finance the costs of constructing, reconstructing and improving the following street segments, intersections, streetscape improvements, landscaping, lighting and signage projects, including the costs of design, engineering, surveying and inspection:

Market Street, Lewis Street to Douglas Avenue
Topeka Avenue, Lewis Street to Douglas Avenue
Emporia Avenue, Lewis Street to Douglas Avenue
St. Francis Avenue, William Street to Douglas Avenue
St. Francis Avenue, Lewis Street to Waterman Street
William Street, Main Street to Commerce Street
English Street, Main Street to Emporia Avenue
Lewis Street, Market Street to St. Francis Avenue
Wayfinding Improvements including Streetscape Design Manual

In addition to limiting the use of tax increment financing to the above specified improvement projects, the City will stipulate in the project plans for any redevelopment project located within the expansion area that an amount equal to seventy percent (70%) of the tax increment realized from taxpayers in the expansion area shall be allocated by the County Treasurer to the City to finance authorized project costs and the remainder shall be allocated and paid to taxing districts in the same manner as other ad valorem taxes. The limits described in this section shall not apply to redevelopment projects located in the original Center City South Redevelopment District.

SECTION 6: PROJECT PLANS

Per statute, any proposed redevelopment projects will be presented to the Governing Body in segments through the adoption of separate redevelopment Project Plans. Each Project Plan will identify specific project areas located within the established redevelopment district and will include detailed descriptions of the projects as well as a financial feasibility study that shows the economic benefits out-weigh the costs. Project Plans must be reviewed by the Metropolitan Area Planning Commission and submitted to a public hearing following proper notification of property owners and occupants, before they can be adopted by a two-thirds majority vote of the Governing Body. Only then can tax increment income be spent on redevelopment projects.

Map and Legal Description of Property to be Redeveloped

EXHIBIT B

Legal Description of the Douglas Place Redevelopment District

All property located in Wichita, Sedgwick County, Kansas within the boundaries beginning at the intersection of the centerline of Broadway Avenue and the north right of way line of Douglas Avenue; thence east to the east right of way line of Topeka Avenue; thence south to the south right of way line of William Street; thence west to the west of way line of Broadway Avenue; thence north to the point of beginning; and including all street rights of way within such described area.

EXHIBIT "I"

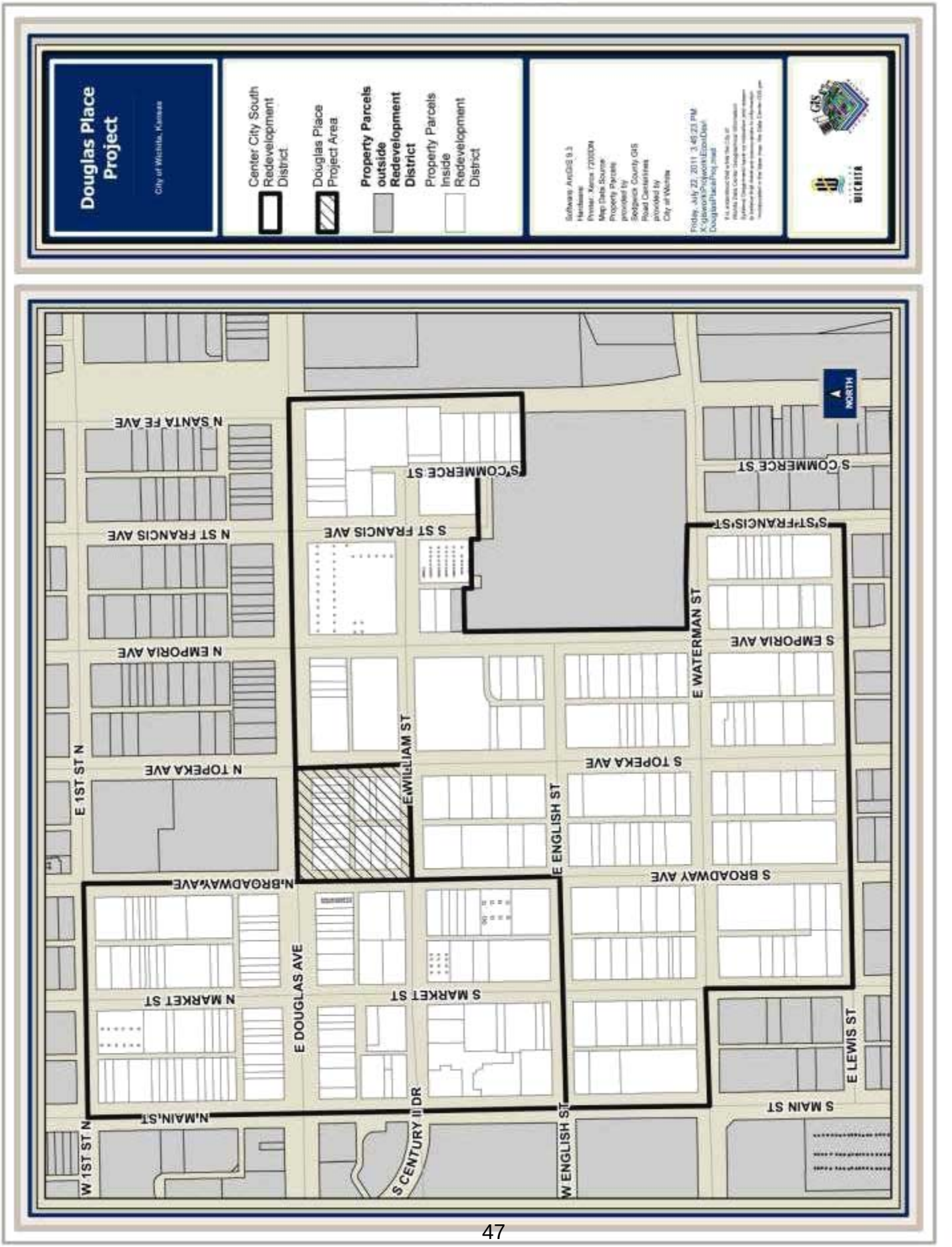
Douglas Place Project
City of Wichita, Kansas
Center City South Redevelopment District
Douglas Place Project Area
Property Parcels outside Redevelopment District
Property Parcels Inside Redevelopment District
Software: ArcGIS 9.3
Hardware:
Printer: Xerox 7200DN
Map Data Source:
Property Parcels provided by Sedgwick County GIS
Road Centerlines provided by City of Wichita
Friday, July 22, 2011 3:45:23 PM
K:\giswork\Projects\ExpoDist\DouglasPlaceProj.mxd
GIS
WICHITA
NORTH
N SANTA FE AVE
N ST FRANCIS AVE
N EMPORIA AVE
N TOPEKA AVE
E 1ST ST N
N BROADWAY AVE
N MARKET ST
N MAIN ST
W 1ST ST N
E DOUGLAS AVE
S COMMERCE ST
S ST FRANCIS AVE
E WILLIAM ST
S MARKET ST
S CENTURY II DR
E ENGLISH ST
W ENGLISH ST
S TOPEKA AVE
S BROADWAY AVE
E WATERMAN ST
S EMPORIA AVE
S ST FRANCIS ST
S COMMERCE ST
E LEWIS ST
S MAIN ST

Relocation Assistance Plan

RELOCATION ASSISTANCE PLAN

(KSA 12-1777)

Assistance for the relocation of persons, families or businesses from property acquired in conjunction with the Douglas Place Project is not required. No persons or families will be displaced as a result of the Project and no tenants will be relocated other than within the Douglas Place Project boundaries.

Description of Proposed Douglas Place Project

Center City South Redevelopment District

DESCRIPTION OF PROPOSED DOUGLAS PLACE PROJECT

In 2008 the City of Wichita began an effort to revitalize downtown and make it "Everybody's Neighborhood". The culmination of this effort is Project Downtown, a master plan adopted by the City Council and MAPC in 2010 and by Sedgwick County in 2011. The Plan identifies unique districts within downtown with development goals specific to each district's elements and location. The Douglas Place Project is within the Douglas Core Area with a focus on increased walk ability, retail and uses that benefit from nearby amenities, including hotels. The Plan further identifies William Street as a target walking street and the block south of the Douglas Place Project at Broadway and William as a Catalyst Site.

The Douglas Place Project addresses many of the goals for the Douglas Core Area. The Ambassador Hotel provides Historic renovation of a prime building and adds 117 hotel rooms to downtown. William Street is benefitted by a 250-300 stall parking garage, including enhanced walk ability with the urban park and retail space on the first floor of the garage. The garage further enhances the area by providing parking for the block and for the catalyst site of the old Allis Hotel on Broadway and William.

The Project consists of a complete historic renovation of the 14-story Douglas Place building into a 117 room boutique hotel. The building is located within the Douglas Core area on the corner of Douglas and Broadway. Renovation of the building will include a lobby and restaurant/bar on the 1st floor and large banquet facilities on the 2nd floor.

The southeast corner of the block is currently a paved parking. A 250-300 stall parking garage will be constructed on the corner. The first floor will include 8,400 square feet of retail space to support the walk ability of William Street.

The alleys on the block will be reworked to make them more compatible with pedestrians and vehicles as well as adding to the mid-block east/west circulation patterns identified in Project Downtown. An urban park will be developed between the Ambassador Hotel and the old Henry's building.

The Project Area also includes the long vacant former Henry's building. Redevelopment is under consideration and the value of future development of that building has been factored in to the tax increment estimates.

USE OF TAX INCREMENT FINANCING

The City of Wichita has undertaken the legal steps necessary to establish a redevelopment district pursuant to state laws (K.S.A. 12-1770 *et seq*.) in order to use

tax increment financing ("TIF") to fund a portion of the acquisition and development of a parking structure subject to a development agreement with Douglas Place, LLC. Upon adoption of this project plan, the City will have established its authority under state law to issue general obligation bonds to finance the TIF-funded improvements, which bonds will be repaid from the incremental increase in property taxes resulting from the redevelopment of the Project Area. The project costs consist of the following:

- **Property Acquisition** – The City will use Tax Increment Financing in the amount of $770,000 to acquire land for the parking garage.
- **Public Improvements** – The City will fund the costs of public improvements including a walkway up to $800,000.
- **Public Parking Garage** – The City will fund the costs of a 250-300 stall parking garage up to $6,000,000.
- **Total Project Costs** -- $7,570,000.
    - **TIF Funded Project Costs** -- $2,920,000
    - **Other City Funding** -- $4,650,000

Metropolitan Area Planning Commission Resolution

RESOLUTION

A RESOLUTION OF THE WICHITA-SEDGWICK COUNTY METROPOLITAN AREA PLANNING COMMISSION FINDING THAT THE CITY OF WICHITA, KANSAS REDEVELOPMENT PROJECT KNOWN AS THE DOUGLAS PLACE PROJECT IS CONSISTENT WITH THE COMPREHENSIVE GENERAL PLAN FOR THE DEVELOPMENT OF THE CITY OF WICHITA, KANSAS.

WHEREAS, the City, by Resolution No. 07-167 passed March 13, 2007, adopted a redevelopment district plan which identifies proposed redevelopment project areas and proposed buildings and facilities to be constructed or improved; and

WHEREAS, by Ordinance No. 47-475 adopted May 8, 2007, and published May 11, 2007, the City of Wichita established a redevelopment district pursuant to K.S.A. 12-1770 et. seq., as amended, known as the Center City South Redevelopment District; and

WHEREAS, by Ordinance No. 48-124 adopted December 9, 2008, and published December 12, 2008, the City of Wichita expanded the Center City South Redevelopment District pursuant to K.S.A. 12-1770 et. seq., as amended and, adopted an amended redevelopment district plan which identifies proposed and specific redevelopment project areas and improvements; and

WHEREAS, the City of Wichita proposes to undertake a Redevelopment Project within the Center City South Redevelopment District, consisting of land acquisition and construction of a public parking garage as set out in the Douglas Place Redevelopment Project Plan; and

WHEREAS, the City has prepared a Redevelopment Project Plan for said Project in accordance with K.S.A. 12-1772 and is considering the adoption of the Plan; and

WHEREAS, a relocation assistance plan under K.S.A. 12-1777 is included in the Redevelopment Project Plan; and

WHEREAS, K.S.A. 12-1772 provides that any City proposing to undertake a redevelopment project within a redevelopment district shall prepare a redevelopment project plan in consultation with the planning commission of the City; and

WHEREAS, the City's proposed redevelopment project plan has been presented to and reviewed by the Wichita-Sedgwick County Metropolitan Area Planning Commission;

NOW, THEREFORE, BE IT RESOLVED BY THE WICHITA-SEDGWICK COUNTY METROPOLITAN AREA PLANNING COMMISSION:

SECTION 1. It is hereby, after due consideration, found that the Douglas Place Redevelopment Project Plan for the Center City South Redevelopment District is consistent with the comprehensive general plan for the development of the City of Wichita, Kansas.

PASSED AND APPROVED by the Wichita-Sedgwick County Metropolitan Area Planning Commission, this 4th day of August, 2011.

(Seal)

Debra Miller Stevens
CHAIRMAN OF THE WICHITA-SEDGWICK COUNTY METROPOLITAN AREA PLANNING COMMISSION

ATTEST:

John L. Schlegel
Secretary, Wichita-Sedgwick County Metropolitan Area Planning Commission

APPROVED AS TO FORM:

Gary E. Rebenstorf, CBRY
Gary E. Rebenstorf, City Attorney

First Published in the WICHITA EAGLE on September 23, 2011

ORDINANCE NO. 49-079

AN ORDINANCE AUTHORIZING THE ISSUANCE OF CERTAIN BONDS OF THE CITY OF WICHITA, KANSAS TO PAY ALL OR A PORTION OF THE COSTS OF LAND ACQUISITION AND CONSTRUCTION OF A PUBLIC PARKING GARAGE AND URBAN PARK IN THE DOUGLAS PLACE REDEVELOPMENT PROJECT AREA.

WHEREAS, Article 12, Section 5 of the Kansas Constitution empowers cities to determine their local affairs and government; and

WHEREAS, the City of Wichita, Kansas (the "City") desires to promote, stimulate and develop the general economic welfare and prosperity of the City and its environs, to provide for commercial redevelopment of declining areas, avoid economic stagnation and maintain attractive neighborhoods; and

WHEREAS, the proposed Project Plan for the Douglas Place Project (the "Redevelopment Project"), located within the Center City South Redevelopment District, has been found by the Wichita Sedgwick County Metropolitan Area Planning Commission to be consistent with the comprehensive general plan for the development of the community, and is under consideration concurrently herewith; and

WHEREAS, the Governing Body of the City has found and determined that it is necessary and desirable, and in the interest and for the general economic welfare of the City and its inhabitants, that the City construct certain public improvements in the area of the Redevelopment Project in an aggregate amount of $7,570,000 plus the cost of interest on borrowed money and other issuance costs; and

WHEREAS, under the authority of K.S.A. 13-1024c, as amended by City of Wichita Charter Ordinance No. 156, the Governing Body of the City hereby finds and determines that it is necessary and desirable and in the interest for the general economic welfare of the City and its inhabitants, that general obligation bonds of the City in an amount not to exceed $4,650,000, plus the cost of interest on borrowed money and other issuance costs, be authorized and issued for the purpose of paying a portion of the costs of public improvements included in the Douglas Place Project Area.

WHEREAS, under the authority of Article 12, Section 5 of the Kansas Constitution and K.S.A. 12-1770, *et seq*., the Governing Body of the City hereby finds and determines that it is necessary and desirable and in the interest for the general economic welfare of the City and its inhabitants, that full faith and credit tax increment bonds of the City, in an amount not to exceed $2,920,000, plus the cost of interest on borrowed money and other issuance costs, be authorized and issued for the purpose of paying a portion of the costs of public improvements referred to in the preceding clause,

NOW, THEREFORE, BE IT ORDAINED BY THE GOVERNING BODY OF THE CITY OF WICHITA, KANSAS:

SECTION 1. That it is necessary to acquire land and construct a public parking garage and urban park within the Douglas Place Project Area of the Center City South Redevelopment District.

SECTION 2. That the City of Wichita, Kansas, is hereby authorized to issue bonds in the total aggregate principal of $7,570,000, plus the cost of interest on borrowed money and other issuance costs, under the authority specified in sections 3 and 4 below, to pay certain costs in connection with the development of a parking garage and urban park in the Douglas Place Project Area, Center City South Redevelopment District.

SECTION 3. The governing body hereby declares it to be its intention to issue and sell, in the manner provided by law, general obligation bonds (the "Bonds") under the authority of K.S.A. 13-1024c, as amended by City of Wichita Charter Ordinance No. 156, to pay the cost of public improvements included in redevelopment of the Douglas Place Project, Center City South Redevelopment District. Such costs may include architectural fees, land acquisition costs, construction costs and direct expenses associated with the construction of the public improvements. The public improvements shall include land acquisition, construction of an urban park and construction of a 282 stall public parking garage. The costs of such improvements, or a portion of such costs, shall be paid or reimbursed by the issuance of general obligation bonds as aforesaid in an amount not to exceed $4,650,000 plus the cost of interest on borrowed money and other issuance costs.

SECTION 4. The governing body hereby declares it to be its intention to issue and sell, in the manner provided by law, full faith and credit tax increment bonds (the "Bonds") under the authority of Article 12, Section 5 of the Kansas Constitution and K.S.A. 12-1770 *et seq.*, including specifically, K.S.A 12-1774, to pay all or a portion of the costs of land acquisition and construction of an urban park and public parking garage within the project area of the Center City South Redevelopment District. The costs of such improvements, or a portion of such costs, shall be paid or reimbursed by the issuance of full faith and credit tax increment bonds as aforesaid in an amount not to exceed $2,920,000, plus the cost of interest on borrowed money and other issuance costs.

SECTION 5. It is hereby further authorized, ordered and directed that in order to temporarily finance the aforesaid costs prior to the issuance of the Bonds as hereinbefore provided, there may be issued temporary improvement notes (the "Notes"), the aggregate amount of which shall not exceed the sum of $7,570,000, plus the cost of issuance on borrowed money and other issuance costs, such Notes to be issued from time to time upon subsequent ordinance of the City which shall provide and set forth the details of the Notes, including the fixing of the dates, terms, denominations, interest rates and maturity dates thereof. Such Notes shall be issued and provision shall be made therefor as funds are needed and required for the orderly completion of the aforesaid public improvements. Any Notes issued under the authority of this Section shall be issued under and will contain a recital that they are issued under the authority of K.S.A. 10-123 and K.S.A. 12-1774, as amended and supplemented, and/or K.S.A. 13-1024c, as amended by

City of Wichita Charter Ordinance No. 156 and Article 12, Section 5 of the Kansas Constitution, and shall contain all other usual and required recitals and covenants and be in the form required therefor by said K.S.A. 10-123, as amended and supplemented; and said Notes may be issued in combination with any other temporary notes being issued by the City as shall be determined by the Governing Body at the time of such issuance to be in the City's best interests.

SECTION 6. This Ordinance shall take effect and be in force from and after its passage and publication one time in the official City paper.

PASSED AND APPROVED BY the Governing Body of the City of Wichita, Kansas, this 20th day of September, 2011.

ATTEST:

_____ _____

Karen Sublett, City Clerk Carl Brewer, Mayor

APPROVED AS TO FORM:

_____

Gary E. Rebenstorf
Director of Law

_____**PUBLISHED IN THE WICHITA EAGLE ON** SEPTEMBER 23, 2011_____

Ordinance No. 49-080

AN ORDINANCE OF THE CITY OF WICHITA ESTABLISHING
THE DOUGLAS AND BROADWAY COMMUNITY IMPROVEMENT DISTRICT

WHEREAS, the provisions of K.S.A. 12-6a26, as amended, (the "CID Act") set forth the procedure for the establishment of a Community Improvement District ("CID"); and

WHEREAS, the CID Act provides that prior to creating any CID, the Governing Body shall, by resolution, direct and order a public hearing on the advisability of creation of such CID and the construction and expenditure of costs of community improvement district projects relating thereto, and give notice of the hearing by publication once each week for two consecutive weeks in the official City newspaper, the second publication to be at least seven days prior to the hearing, and by the mailing of notice to the owners of property within the proposed CID; and

WHEREAS, the Governing Body of the City adopted Resolution No. R-11-207 (the "Resolution") on August 23, 2011, directing that a public hearing on the proposed Douglas and Broadway CID be held September 13, 2011, and requiring that the City Clerk provide for notice of such public hearing as set forth in the Act; and

WHEREAS; the Resolution was published once each week for two consecutive weeks in the newspaper and notice of the hearing was given to all property owners within the proposed CID as required by the CID Act; and

WHEREAS, the CID Act further authorizes the City, in order to pay the costs of such projects, to impose a community improvement district sales tax on the selling of tangible personal property at retail or rendering or furnishing of taxable services within a CID in any increment of .10% or .25% not to exceed 2.0% and to reimburse the costs of community improvement district projects from community improvement district sales tax; and

WHEREAS, on September 13, 2011, the Governing Body of the City conducted a public hearing on the proposed "Douglas and Broadway CID", the proposed community improvement district projects related thereto, the method of financing the same and the imposition of a community improvement district sales tax; and

WHEREAS, the Governing Body of the City hereby finds and determines it to be advisable to create the Douglas and Broadway CID and set forth the boundaries thereof, authorize CID Projects relating thereto, approve the maximum costs of such community improvement district projects, approve the method of financing the same and impose the community improvement district sales tax, all in accordance with the provisions of the CID Act;

NOW THEREFORE, BE IT ORDAINED BY THE GOVERNING BODY OF THE CITY OF WICHITA, KANSAS:

Section 1. **Creation of The Douglas and Broadway CID District**. The Governing Body hereby finds and determines it is advisable to create the Douglas and Broadway CID within the City and approve the boundaries thereof, and, as such, hereby creates the Douglas and Broadway CID and approves the boundaries thereof. A legal description of the property within the Douglas and Broadway CID is set forth in **Exhibit B** attached hereto and incorporated by reference. A map generally outlining the boundaries of the Douglas and Broadway CID is attached hereto as **Exhibit C** and incorporated herein by reference.

Section 2. **Authorization of CID Projects.** The Governing Body hereby finds and determines that it is advisable to authorize the community improvement district projects described on the attached **Exhibit A**, incorporated herein by reference, (the "CID Projects") within the Douglas and Broadway CID and as such authorizes the CID Projects.

Section 3. Maximum Cost. The maximum cost of the CID Projects, exclusive of administrative fees and costs to be paid to the State of Kansas and to the City, is $2,560,000.

Section 4. Method of Financing The CID Projects will be financed on a pay-as-you-go basis from revenues received from the imposition of a community improvement district sales tax in the amount of two percent (2%) (the "CID Sales Tax") on the selling of tangible personal property at retail or rendering or furnishing services taxable pursuant to the provisions of the Kansas retailers' sales tax act within the Douglas and Broadway CID. There will be no special assessments levied pursuant to the CID Act within the boundaries of the Douglas and Broadway CID. There will be no bonds issued pursuant to the CID Act.

Section 5. **Imposition of the Community Improvement District Sales Tax.** In order to provide for the payment of costs of the CID Projects on a pay-as-you-go basis, the Governing Body hereby imposes the CID Sales Tax within the Douglas and Broadway CID in an amount of two percent (2%) on the selling of tangible personal property at retail or rendering or furnishing services taxable pursuant to the Kansas retailers' sales tax act within the Douglas and Broadway CID, with such CID Sales Tax to commence following submittal by the City of a certified copy of the ordinance to the Kansas Department of Revenue. Submittal to the Kansas Department of Revenue shall occur following publication of the ordinance and written notice from the developer requesting submittal. Such CID Sales Tax shall remain in effect for the maximum period provided for in the CID Act, or such period as may be required for payment from CID Sales Tax revenues of the maximum amount of costs approved for CID Projects in Section 3, above, whichever is the lesser period.

Section 6. Collection of the Sales Tax. The collection of the CID Sales Tax shall be made in the manner presented in the CID Act

Section 7. **Segregation of the Sales Tax Revenues.** All revenues derived from the collection of the CID Sales Tax shall be deposited into a special fund of the City to be designated as the Douglas and Broadway CID Sales Tax Revenue Fund. Such revenues shall be used to pay the costs of the CID Projects on a pay-as-you-go basis and related expenses, including administrative fees and reimbursement to be paid to the State of Kansas and to the City.

Section 8. Effective Date. This Ordinance shall take effect from and after its passage by the Governing Body, and its publication once in the official newspaper of the City.

ADOPTED at Wichita, Kansas, this 20th day of September, 2011.

ATTEST:

_____ _____

Karen Sublett, City Clerk Carl Brewer, Mayor

Approved as to Form:

_____

Gary E. Rebenstorf, City Attorney

EXHIBIT A

PROJECT

The general nature of the proposed projects (the "**Projects**") is to partially finance the construction, maintenance, and procurement of certain improvements, costs, and services within the District, for the rehabilitation and conversion of the Douglas Place building at 104 S. Broadway into an upscale boutique, including, but not limited to: land acquisition, infrastructure related items, streets, sidewalks, buildings, facilities, tenant improvements, water management and drainage related items, landscaping, lighting, art, water features and other cultural amenities, ongoing maintenance of the District, marketing, advertisement and economic development, cleaning and maintenance, and the City's administrative costs in establishing and maintaining the District, and any other items permitted to be financed within the District under the Act.

EXHIBIT B

LEGAL DESCRIPTION

Lots 1, 3, and 5 on Douglas Avenue, N.A. English's Addition, City of Wichita, Sedgwick County, Kansas

EXHIBIT "C"

Proposed Douglas and Broadway Community Improvement District
City of Wichita, Kansas
Proposed Douglas and Broadway Community Improvement District
Property Parcels within District
Property Parcels outside District
Software: ArcGIS 10
Hardware: Dell Xeon
Printer: Lanier
Map Data Source: Property Parcels provided by Sedgwick County GIS
Road Centerlines provided by City of Wichita
GIS
WICHITA
NORTH
N TOPEKA AVE
S TOPEKA AVE
E DOUGLAS AVE
E WILLIAM ST
N BROADWAY AVE
S BROADWAY AVE
400
401
121
214
100
331
323
311
309
104
113
119
123
114
124
201
200
224
222
220
210
206
105
223
221
219
217
205
230
120
130
229
207
209
208

ORDINANCE NO. 49-081 028001

AN ORDINANCE LEVYING AND ASSESSING MAXIMUM SPECIAL ASSESSMENTS ON CERTAIN LOTS, PIECES AND PARCELS OF LAND LIABLE FOR SUCH SPECIAL ASSESSMENTS TO PAY THE COSTS OF INTERNAL IMPROVEMENTS IN THE CITY OF WICHITA, KANSAS, AS AUTHORIZED BY RESOLUTION NO. 11-213 OF THE CITY (104 SOUTH BROADWAY FACADE IMPROVEMENT DISTRICT).

WHEREAS, pursuant to Resolution No.11-213 of the City of Wichita, Kansas (the "City") adopted on August 23, 2011, the Governing Body has authorized the creation of an improvement district and the construction of the following improvements (the "Improvements"):

Phase 1 Facade Improvements to the ninth through fourteenth stories of the building at 104 South Broadway abutting public ways, including Douglas Avenue, Broadway Avenue and public right of way south of the described building.

WHEREAS, prior to commencement of construction of the Improvements, the City has determined the maximum amount of assessment against each lot, piece or parcel of land deemed to be benefited by the Improvements based on the approved estimate of cost of the Improvements and has held a public hearing on the proposed maximum special assessments to be levied against property in the improvement district for the cost of construction of the Improvements as required by K.S.A. 12-6a09; and

NOW, THEREFORE, BE IT ORDAINED BY THE GOVERNING BODY OF THE CITY OF WICHITA, KANSAS:

SECTION 1. Pursuant to K.S.A. 12-6a01 *et seq*., special assessments to pay the costs of the Improvements are hereby levied and assessed against the lots, pieces and parcels of land liable therefore as described on Exhibit A to this Ordinance, which is incorporated herein by reference, and in the amounts set forth on Exhibit A following the description of each lot, piece or parcel of land; provided, however, that if the final cost of the completed Improvements is less than the maximum amount of the assessments set forth on Exhibit A, the Governing Body of the City shall adjust the assessments to reflect the cost of the completed Improvements.

SECTION 2. The amounts so levied and assessed shall be due and payable from and after the date of publication of this Ordinance; and the City Clerk shall notify the owners of the affected properties of the amounts of their assessments, bonds will be issued therefore and such assessments will be levied concurrently with general taxes and be payable in 15 annual installments.

SECTION 3. The City Clerk shall certify to the County Clerk, in the same manner and at the same time as other taxes are certified, for a period of 15 years, all of the adjusted assessments as referred to in Section 1, together with interest on such amount thereof at a rate not exceeding the maximum rate as prescribed by the laws of the state of Kansas; and such amounts shall be

placed on the tax rolls and collected as other taxes are collected, the levy for each year being a portion of the principal amount of the assessment plus one year's interest on the amount remaining unpaid.

SECTION 4. This Ordinance shall take effect and be in force from and after its publication once in the official City newspaper. The City Clerk is directed to file this Ordinance with the Register of Deeds of Sedgwick County, Kansas.

PASSED by the Governing Body of the City of Wichita, Kansas, and approved by the Mayor on September 20th, 2011.

(Seal)

_____
Carl Brewer, Mayor

ATTEST:

_____
Karen Sublett, City Clerk

APPROVED AS TO FORM:

_____
Gary Rebenstorf, City Attorney

EXHIBIT A

Building Facade Improvement 104 S. Broadway

Property Subject to Assessment	**Proposed Maximum Assessment**
LOTS 1, 3, AND 5 ON DOUGLAS AVENUE N.A. ENGLISH'S ADDITION, CITY OF WICHITA, SEDGWICK COUNTY, KANSAS PIN #00123242	$681,667.00

Facade Improvements for 104 South Broadway.
South of Douglas, East of Broadway
Project No.
OCA No.
Square Foot tm 26 August 2011

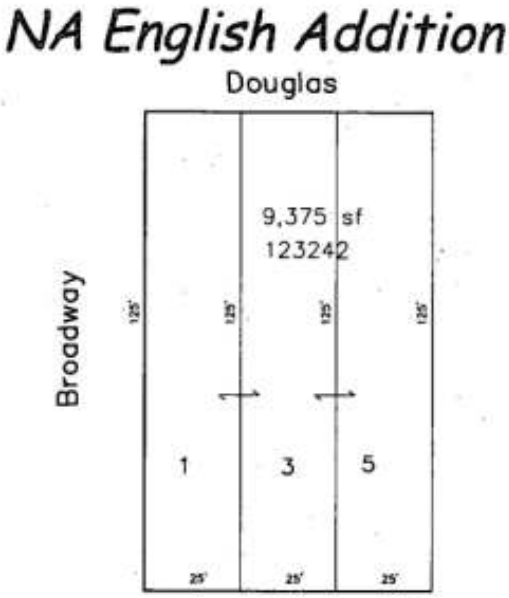

ORDINANCE NO. 49-082 028001

AN ORDINANCE LEVYING AND ASSESSING MAXIMUM SPECIAL ASSESSMENTS ON CERTAIN LOTS, PIECES AND PARCELS OF LAND LIABLE FOR SUCH SPECIAL ASSESSMENTS TO PAY THE COSTS OF INTERNAL IMPROVEMENTS IN THE CITY OF WICHITA, KANSAS, AS AUTHORIZED BY RESOLUTION NO. 11-215 OF THE CITY (104 SOUTH BROADWAY FACADE IMPROVEMENT DISTRICT).

WHEREAS, pursuant to Resolution No.11-215 of the City of Wichita, Kansas (the "City") adopted on August 23, 2011, the Governing Body has authorized the creation of an improvement district and the construction of the following improvements (the "Improvements"):

Phase 2 Facade Improvements to the third through eighth stories of the building at 104 South Broadway abutting public ways, including Douglas Avenue, Broadway Avenue and public right of way south of the described building.

WHEREAS, prior to commencement of construction of the Improvements, the City has determined the maximum amount of assessment against each lot, piece or parcel of land deemed to be benefited by the Improvements based on the approved estimate of cost of the Improvements and has held a public hearing on the proposed maximum special assessments to be levied against property in the improvement district for the cost of construction of the Improvements as required by K.S.A. 12-6a09; and

NOW, THEREFORE, BE IT ORDAINED BY THE GOVERNING BODY OF THE CITY OF WICHITA, KANSAS:

SECTION 1. Pursuant to K.S.A. 12-6a01 *et seq*., special assessments to pay the costs of the Improvements are hereby levied and assessed against the lots, pieces and parcels of land liable therefore as described on Exhibit A to this Ordinance, which is incorporated herein by reference, and in the amounts set forth on Exhibit A following the description of each lot, piece or parcel of land; provided, however, that if the final cost of the completed Improvements is less than the maximum amount of the assessments set forth on Exhibit A, the Governing Body of the City shall adjust the assessments to reflect the cost of the completed Improvements.

SECTION 2. The amounts so levied and assessed shall be due and payable from and after the date of publication of this Ordinance; and the City Clerk shall notify the owners of the affected properties of the amounts of their assessments, bonds will be issued therefore and such assessments will be levied concurrently with general taxes and be payable in 15 annual installments.

SECTION 3. The City Clerk shall certify to the County Clerk, in the same manner and at the same time as other taxes are certified, for a period of 15 years, all of the adjusted assessments as referred to in Section 1, together with interest on such amount thereof at a rate not exceeding the maximum rate as prescribed by the laws of the state of Kansas; and such amounts shall be

placed on the tax rolls and collected as other taxes are collected, the levy for each year being a portion of the principal amount of the assessment plus one year's interest on the amount remaining unpaid.

SECTION 4. This Ordinance shall take effect and be in force from and after its publication once in the official City newspaper. The City Clerk is directed to file this Ordinance with the Register of Deeds of Sedgwick County, Kansas.

PASSED by the Governing Body of the City of Wichita, Kansas, and approved by the Mayor on September 20th, 2011.

(Seal)

_____
Carl Brewer, Mayor

ATTEST:

_____
Karen Sublett, City Clerk

APPROVED AS TO FORM:

_____
Gary Rebenstorf, City Attorney

EXHIBIT A

Building Facade Improvement 104 S. Broadway

Property Subject to Assessment	**Proposed Maximum Assessment**
LOTS 1, 3, AND 5 ON DOUGLAS AVENUE N.A. ENGLISH'S ADDITION, CITY OF WICHITA, SEDGWICK COUNTY, KANSAS PIN #00123242	$681,667.00

Facade Improvements for 104 South Broadway.
South of Douglas, East of Broadway
Project No.
OCA No.
Square Foot tm 26 August 2011

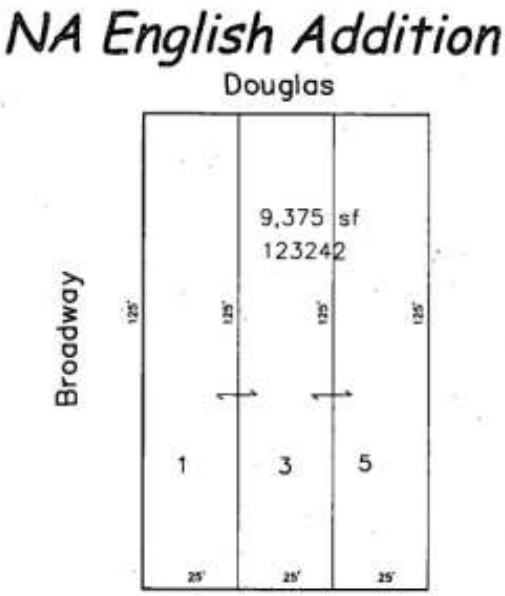

ORDINANCE NO. 49-083 028001

AN ORDINANCE LEVYING AND ASSESSING MAXIMUM SPECIAL ASSESSMENTS ON CERTAIN LOTS, PIECES AND PARCELS OF LAND LIABLE FOR SUCH SPECIAL ASSESSMENTS TO PAY THE COSTS OF INTERNAL IMPROVEMENTS IN THE CITY OF WICHITA, KANSAS, AS AUTHORIZED BY RESOLUTION NO. 11-216 OF THE CITY (104 SOUTH BROADWAY FACADE IMPROVEMENT DISTRICT).

WHEREAS, pursuant to Resolution No.11-216 of the City of Wichita, Kansas (the "City") adopted on August 23, 2011, the Governing Body has authorized the creation of an improvement district and the construction of the following improvements (the "Improvements"):

Phase 3 Facade Improvements to the first and second stories of the building at 104 South Broadway abutting public ways, including Douglas Avenue, Broadway Avenue and public right of way south of the described building.

WHEREAS, prior to commencement of construction of the Improvements, the City has determined the maximum amount of assessment against each lot, piece or parcel of land deemed to be benefited by the Improvements based on the approved estimate of cost of the Improvements and has held a public hearing on the proposed maximum special assessments to be levied against property in the improvement district for the cost of construction of the Improvements as required by K.S.A. 12-6a09; and

NOW, THEREFORE, BE IT ORDAINED BY THE GOVERNING BODY OF THE CITY OF WICHITA, KANSAS:

SECTION 1. Pursuant to K.S.A. 12-6a01 *et seq*., special assessments to pay the costs of the Improvements are hereby levied and assessed against the lots, pieces and parcels of land liable therefore as described on Exhibit A to this Ordinance, which is incorporated herein by reference, and in the amounts set forth on Exhibit A following the description of each lot, piece or parcel of land; provided, however, that if the final cost of the completed Improvements is less than the maximum amount of the assessments set forth on Exhibit A, the Governing Body of the City shall adjust the assessments to reflect the cost of the completed Improvements.

SECTION 2. The amounts so levied and assessed shall be due and payable from and after the date of publication of this Ordinance; and the City Clerk shall notify the owners of the affected properties of the amounts of their assessments, bonds will be issued therefore and such assessments will be levied concurrently with general taxes and be payable in 15 annual installments.

SECTION 3. The City Clerk shall certify to the County Clerk, in the same manner and at the same time as other taxes are certified, for a period of 15 years, all of the adjusted assessments as referred to in Section 1, together with interest on such amount thereof at a rate not exceeding the maximum rate as prescribed by the laws of the state of Kansas; and such amounts shall be placed on the tax rolls and collected as other taxes are collected, the levy for each year being a

portion of the principal amount of the assessment plus one year's interest on the amount remaining unpaid.

SECTION 4. This Ordinance shall take effect and be in force from and after its publication once in the official City newspaper. The City Clerk is directed to file this Ordinance with the Register of Deeds of Sedgwick County, Kansas.

PASSED by the Governing Body of the City of Wichita, Kansas, and approved by the Mayor on September 20th, 2011.

(Seal)

_____
Carl Brewer, Mayor

ATTEST:

_____
Karen Sublett, City Clerk

APPROVED AS TO FORM:

_____
Gary Rebenstorf, City Attorney

EXHIBIT A

Building Facade Improvement 104 S. Broadway

Property Subject to Assessment	**Proposed Maximum Assessment**
LOTS 1, 3, AND 5 ON DOUGLAS AVENUE N.A. ENGLISH'S ADDITION, CITY OF WICHITA, SEDGWICK COUNTY, KANSAS PIN #00123242	$681,667.00

Facade Improvements for 104 South Broadway.
South of Douglas, East of Broadway
Project No.
OCA No.
Square Foot tm 26 August 2011

NA English Addition

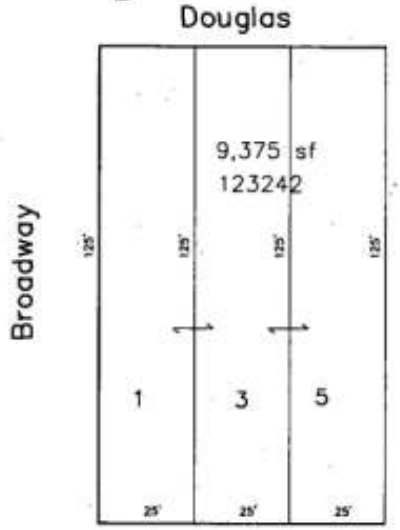

PUBLISHED IN THE WICHITA EAGLE ON SEPTEMBER 23, 2011 028001

ORDINANCE NO. 49-084

**AN ORDINANCE ADOPTING A PROJECT PLAN
FOR THE DOUGLAS PLACE PROJECT
IN THE CENTER CITY SOUTH REDEVELOPMENT DISTRICT**

WHEREAS, by Ordinance No. 47-475 adopted May 8, 2007, and published May 11, 2007, the City of Wichita established a redevelopment district pursuant to K.S.A. 12-1770 et. seq., as amended, known as the Center City South Redevelopment District; and

WHEREAS, by Ordinance No. 48-124 adopted December 9, 2008, and published December 12, 2008, the City of Wichita expanded the Center City South Redevelopment District pursuant to K.S.A. 12-1770 et. seq. as amended.

WHEREAS, the City has prepared a Project Plan for the Douglas Place Project located within the Center City South Redevelopment District, and has given notice for said Project in accordance with K.S.A. 12-1772; and

WHEREAS, the Wichita Sedgwick County Metropolitan Area Planning Commission in action on August 4, 2011, has found that the Douglas Place Project Plan is consistent with the comprehensive general plan for the development of the community; and

WHEREAS, the Governing Body of the City of Wichita, Kansas, by Resolution number R-11-195 adopted August 9th, 2011, set a public hearing to consider the adoption of the Redevelopment Project Plan on the 13th day of September, 2011, at 9:00 a.m. or thereafter, in the City Council Chambers, City Hall, 455 N. Main, Wichita, Kansas; and

WHEREAS, the Governing Body is authorized following the public hearing to adopt the Redevelopment Project Plan by Ordinance passed upon a two-thirds vote.

NOW THEREFORE, BE IT ORDAINED BY THE GOVERNING BODY OF THE CITY OF WICHITA, KANSAS:

1. The Douglas Place Project Plan, including the feasibility study, district plan, maps and boundary descriptions, and descriptions of the public improvement projects, is on file in the Office of the City Clerk, City Hall, 13th Floor, 455 N. Main, Wichita, Kansas, and is incorporated by reference as though fully set forth herein. Said Project Plan is hereby adopted as the Douglas Place Project Plan for the Center City South Redevelopment District.

2. This Ordinance shall be in force and effect from and after its passage, approval, and publication once in the official City paper.

ADOPTED AND PASSED BY THE GOVERNING BODY, not less than two-thirds (2/3) of the members elect voting in favor thereof, this 20th day of September, 2011.

_____
Carl Brewer, Mayor

ATTEST:

_____
Karen Sublett, City Clerk

APPROVED AS TO FORM:

_____
Gary E. Rebenstorf, City Attorney

(Published in The Wichita Eagle on September 23, 2011)

ORDINANCE NO. 49-100

AN ORDINANCE OF THE CITY OF WICHITA, KANSAS (THE "CITY"), APPROVING CERTAIN PLANNED CONSTRUCTION AND APPROVING AND AUTHORIZING THE EXECUTION OF A DEVELOPMENT AGREEMENT BETWEEN THE CITY AND DOUGLAS PLACE, LLC REGARDING DEVELOPMENT OF PROPERTY AT AND ADJACENT TO DOUGLAS AND BROADWAY FOR PURPOSES OF A BOUTIQUE HOTEL, A PARKING GARAGE AND AN URBAN PARK, ALL PURSUANT TO CHARTER ORDINANCE NO. 177

WHEREAS, in conjunction with this ordinance, the City of Wichita (the "City") has approved Douglas Place LLC (the "Developer") to serve as developer in connection with the renovation of an historic and iconic structure at Douglas and Broadway in downtown Wichita into a boutique hotel and restaurant, and the construction of certain public and private improvements in connection with this development, and is now considering allowing construction, without public bid, of up to $800,000 in City-financed urban park improvements on land to be owned by the City adjacent to the renovated building which will serve as the boutique hotel and restaurant; and,

WHEREAS, the Developer will furnish adequate sureties for the full and faithful completion of the said improvements; and

WHEREAS**,** Charter Ordinance No. 177 of the City requires that, prior to commencement of construction of the improvements, the Governing Body of the City must conduct a public hearing to consider whether to implement the subsection of Charter Ordinance No. 177 that allows for development agreements, in the context of these specific improvements, and must adopt, by 2/3 vote of its members, an Ordinance approving the construction under the provisions of Charter Ordinance No. 177; and

WHEREAS, the Governing Body of the City, pursuant to the requirements of Charter Ordinance No. 177, has conducted a public hearing on September 13, 2011, to hear and consider public comment on the question of whether to implement the provisions of Charter Ordinance No. 177 to approve the construction of the subject improvements under the provisions of Charter Ordinance No. 177 and the proposed Agreement.

NOW, THEREFORE, BE IT ORDAINED BY THE GOVERNING BODY OF THE CITY OF WICHITA, KANSAS AS FOLLOWS:

Section 1. Authorization of Agreement . The City is hereby authorized to enter into the Development Amendment, by and between the City and Douglas Place, LLC, in substantially the form presented by City Staff for consideration prior to the public hearing of September 13, 2011, together with such revisions and modifications as the Governing Body has directed, following the conclusion of such public hearing.

Section 2. Approval of Construction of the Urban Park by the Developer. The Governing Body hereby approves the completion of design work and construction of the Urban Park, as defined in the Agreement, under the provisions of Charter Ordinance No. 177, and further requires (and the City is authorized to accept as sureties for completion of the subject improvements), a labor and materials payment and performance bond to be obtained by the Developer (or its General Contractor, as defined in the Agreement) in the full amount of the estimated cost of completion of the Urban Park improvements.

Section 3. Execution of Documents. The Mayor of the City is hereby authorized and directed to execute the Development Agreement in substantially the form approved by the Governing Body with such additional minor corrections thereto as the Mayor shall approve,

which approval shall be evidenced by his execution thereof, and City Staff shall deliver the Agreement for and on behalf of and as the act and deed of the City.

Section 4. Further Authority. The City shall, and the officers, agents and employees of the City are hereby authorized and directed to, take such further action as necessary to carry out and give effect to the transactions contemplated by this Ordinance, the Development Amendment, and such other documents as are contemplated by the Development Agreement in connection with the construction of the Urban Park improvements.

Section 5. Effective Date. This Ordinance shall take effect and be in full force from and after its adoption by vote of 2/3 of the members of the governing body of the City of Wichita, Kansas, and publication once in the official newspaper of the City.

PASSED by the Governing Body of the City of Wichita, Kansas this 20th day of September, 2011, with no less than 2/3 of the members voting in favor thereof.

CITY OF WICHITA, KANSAS

By_____
Carl Brewer, Mayor

ATTEST:

_____
Karen Sublett, City Clerk

(SEAL)

Approved as to Form:

_____
Gary E. Rebenstorf , City Attorney

(Published in *The Wichita Eagle* on September 23, 2011 and September 30, 2011.)

CHARTER ORDINANCE NO. 216

A CHARTER ORDINANCE AMENDING AND REPEALING SECTION 1 OF CHARTER ORDINANCE NO. 213 OF THE CITY OF WICHITA, KANSAS, WHICH AMENDED AND REPEALED SECTION 1 OF CHARTER ORDINANCE NO. 183 OF THE CITY OF WICHITA, WHICH AMENDED AND REPEALED SECTION 1 OF CHARTER ORDINANCE NO. 174 OF THE CITY OF WICHITA, KANSAS, PERTAINING TO THE APPLICATION OF REVENUES FROM THE TRANSIENT GUEST TAX.

BE IT ORDAINED BY THE GOVERNING BODY OF THE CITY OF WICHITA, KANSAS:

SECTION 1. Section 1 Charter Ordinance No. 213 of the City of Wichita, Kansas, amending Section 1 of Charter Ordinance No. 183 of the City of Wichita, Kansas, amending Section 1 of Charter Ordinance No. 174 of the City of Wichita, Kansas, is hereby amended to read as follows:

> SECTION 1. Section 1 of Charter Ordinance No. 174 of the City of Wichita, Kansas is hereby amended to read as follows:

"Revenue from the transient guest tax generated from facilities other than a hotel at 104 S. Broadway shall be expended in the priority as follows:

> 1st. To pay any obligations, including but not limited to bonds, leases or contracts resulting from or directly attributable to the construction or use of new facilities for convention or exhibition purposes, including but not limited to the Old Town Parking Garage, the Marriott Fairfield Inn and Suites Hotel at the corner of Dewey and Main Streets, the Century II Conference Center, and the Energy Complex, Century II Air Conditioning and Heating Equipment and East Bank Parking Garage serving Century II. Expo Hall, and the Century II Conference Center.
>
> 2nd. To pay any deficit incurred in the operation or maintenance of such new facilities for convention or exhibition purposes.
>
> 3rd. Any funds remaining shall be held in reserve to pay any deficit incurred in the operation or maintenance of Century II, to establish a building fund for future facilities, to pay for extraordinary facility repairs or replacement and to fund attractions deemed to have advantage or interest to the City of Wichita.
>
> 4th. None of the revenue from said tax shall be expended for promotion of conventions and tourism facilities or activities for Sedgwick County outside the city limits of Wichita unless and until an equal transient guest tax is levied by the Board of County Commissioners of Sedgwick County, Kansas, and the City Council authorizes by resolution such expenditures."

Revenue from the transient guest tax generated from a hotel at 104 S. Broadway shall be expended as follows: For the first 15 years of such hotel's operation, 75% of the revenues shall be rebated to the hotel owner in a single annual payment, and the remaining 25% shall be expended in accordance with priorities 1st through 4th, above. After the 15th year of such hotel's operation, all guest tax revenues generated therefrom shall be expended in accordance with priorities 1st through 4th, above.

SECTION 2. The original of Section 1 of Charter Ordinance No. 213 of the City of Wichita, Kansas is hereby repealed.

SECTION 3. This Charter Ordinance shall be published once each week for two consecutive weeks in the official City paper.

SECTION 4. This is a Charter Ordinance which shall take effect sixty-one (61) days after final publication, unless a sufficient petition for a referendum is filed requiring a referendum to be held on the ordinance as provided in Article 12, Section 5, Subsection (c)(3), of the Constitution of the State of Kansas, in which case, the ordinance shall become effective if approved by a majority of the electors voting thereon.

PASSED BY THE GOVERNING BODY, not less than two-thirds of the members elect voting in favor thereof, this September 20, 2011.

_____

Carl Brewer, Mayor

Attest:

_____

Karen Sublett, City Clerk

(Seal)

Approved as to Form:

_____

Gary E. Rebenstorf, Director of Law

DEVELOPMENT AGREEMENT

THIS DEVELOPMENT AGREEMENT ("**Agreement**") is made and entered into as of the _____ day of _____, 2011, by and among The City of Wichita ("**City**"); Douglas Place, LLC, a Kansas limited liability company ("**Developer**"); and Slawson Investment Corporation, a Kansas corporation ("**Slawson**").

WITNESSETH:

WHEREAS, the Developer, the City and Slawson have discussed proceeding with the Project (as defined below); and

WHEREAS, the parties have determined it is in their mutual interests to enter into this Agreement.

NOW, THEREFORE, for said consideration, the parties hereto agree as follows:

1. **DEFINITIONS AND OTHER PROVISIONS**. As used in this Agreement, the following terms shall have the meanings specified below:

A. "**Architect**": Shall mean WDM Architects P.A., or such other architectural firm as may be hereinafter designated by the City and the Developer.

B. **"City Project"**: Shall mean the construction of the Parking Structure, including the Parking Structure Retail Space.

C. "**City's Representative**": Shall mean the City Manager or such other person that is designated in writing by the City Manager from time to time. The Developer shall rely upon the decisions and directions of the City's Representative. The City's Representative may at his or her sole discretion submit any requested approvals to the City Council.

D. "**Developer Project**": Shall mean the renovation of the Douglas Place Building and the construction and development of the Urban Park.

E. "**Developer's Representative**": Shall mean David C. Burk or such other person that is designated by the Developer from time to time. The Developer's Representative shall have

full power and authority to act on behalf of the Developer in the exercise of its rights and obligations under this Agreement. The City shall rely upon the decisions and directions of the Developer's Representative.

F. "**Development Schedule**": Shall mean and refer to the schedule for completing the Project as mutually determined by the City and the Developer pursuant to paragraph 7. A. hereof.

G. "**Douglas Place Building**": Shall mean the 14 floor National Historic building located on the Douglas Place Parcel, to be acquired and renovated by Douglas Place Owner for an approximately 117 room upscale boutique hotel with a restaurant and banquet facilities at an estimated cost of Twenty-One Million Six Hundred Forty Thousand Dollars ($21,640,000).

H. "**Douglas Place Owner**": Shall mean Douglas Place, LLC, a Kansas limited liability company, and any successor owner of the Douglas Place Parcel and Douglas Place Building.

I. "**Douglas Place Parcel**": Shall mean the parcel having a common address of 104 South Broadway, Wichita, KS 67202, so designated on the Site Plan on which the Douglas Place Building is currently located.

J. "**Engineer**": Shall mean Ruggles & Bohm, P.A., or such other engineering firm as may be hereinafter designated by the City and the Developer, which shall be responsible for performing certain civil engineering services in connection with the renovation of the Douglas Place Building and the design and construction of the Urban Park, Parking Structure, alleyways and the installation of utilities for the Project, as well as surveying the Project Property and parcels thereof as necessary or appropriate in connection with the Project.

K. "**General Contractor, Developer Project**": Shall mean Key Construction, Inc., or such other construction firm as may be hereinafter designated by the City and the Developer.

L. **"General Contractor, City Project"**: Shall mean the construction firm selected by the City by means of public bidding.

M. "**Parking and Urban Park Purchase Contract**": Shall mean the Real Estate Purchase Contract dated January 13, 2011, as previously amended, between Slawson and Marketplace Properties, LLC regarding the sale and purchase of the Parking Structure Parcel and the Urban Park Parcel, which contract shall be assigned to the City pursuant to paragraph 3.B herein.

N. "**Parking Structure**": Shall mean an approximately 282 parking stall, multilevel parking structure constructed with concrete precast shell, brick and steel panel materials (including utilities necessary to use and operate the same), containing the Parking Structure Retail Space, which structure and adjacent alleyways to the west and north shall be constructed on the Parking Structure Parcel and which building shall be used for public and leased parking as well as retail and/or office uses within the Parking Structure Parcel.

O. "**Parking Structure Parcel**": Shall mean the parcel so designated on the Site Plan and on which the Parking Structure, Parking Structure Retail Space and adjacent alleyways shall be constructed and operated.

P. "**Parking Structure Retail Lease**": Shall mean the lease to be entered into by the City, as landlord, and Developer or its assigns, as tenant, concerning the Parking Structure Retail Space. The primary term of such lease shall be twenty (20) years; the rent shall be One Dollar ($1.00) for the first five (5) lease years; and Twenty-One Thousand Dollars ($21,000.00) per lease year for each of lease years six (6) through fifteen (15) and Sixty-Three Thousand Dollars ($63,000.00) for each of lease years sixteen (16) through twenty (20). In addition to the rent, Developer shall be responsible for maintenance and repairs of the interior and exterior of the Parking Structure Retail Space shall pay all utilities and insurance for the Parking Structure Retail Space and shall pay the real estate taxes and special assessment installments pertaining to the Parking Structure Retail Space. Developer shall be responsible for all tenant improvements in the Parking Structure Retail Space. Developer shall also be responsible for the cost of all signage related to the Parking Structure Retail Space.

Upon expiration of the Parking Structure Retail Lease, Developer shall have the option to either:

(i) manage the Parking Structure Retail Space for an initial five (5) year period and up to three (3) five (5) year renewal periods. Such management services shall be pursuant to the City's standard form property management agreement and the City shall compensate such manager in an amount equal to six percent (6%) of the gross rentals received by the City as a result of the operations conducted within the Parking Structure Retail Space, or

(ii) purchase the Parking Structure Retail Space (which condominium real property shall be separate from the balance of the Parking Structure) from the City for a purchase price of One Million One Hundred Twenty Thousand Dollars ($1,120,000.00).

The form of the Parking Structure Retail Lease is attached hereto as Exhibit "1."

Q. "**Parking Structure Retail Space**": Shall mean the area to be constructed in the southern portion of the ground level of the Parking Structure, containing approximately 8,400 square feet of floor area, as so designated on the Site Plan, to be leased primarily for retail, restaurant and/or office purposes, and to be constructed by the City as "**Landlord Work**" as identified on Exhibit "C" to the Parking Structure Retail Lease and leased by the City to Developer pursuant to the Parking Structure Retail Lease.

R. "**Prohibited Activities**": Shall mean the prohibited activities listed on Exhibit "2" hereof, which shall be added to all real estate transfer documents as a restrictive covenant.

S. "**Project Budget**": Shall mean the detailed budgets of the costs of designing and constructing the Developer Project and the City Project. A preliminary nondetailed budget overview for the Project is attached hereto as Exhibit "3."

T. "**Project Property**": Shall mean the Douglas Place Parcel, the Urban Park Parcel and the Parking Structure Parcel, including the Parking Structure Retail Space.

U. **Site Plan**": Shall mean the site plan attached to this Agreement as Exhibit "4."

V. "**Slawson Building**": Shall mean the existing former Henry's department store building located on the Slawson Parcel which Slawson desires to renovate when market conditions and other circumstances so permit.

W. "**Slawson Parcel**": Shall mean the parcel having a common address of 124 South Broadway, Wichita, Kansas 67202 so designated on the Site Plan.

X. "**Slawson Parcel Owner**": Shall mean Slawson and any successor owner of the Slawson Parcel and the Slawson Building.

Y. "**Urban Park**": Shall mean the park and adjacent alleyway to the north shown within the Urban Park Parcel on the Site Plan, which shall include pedestrian and vehicular accessways, alleyways, parking, landscaping, decorative features and utilities.

Z. "**Urban Park Parcel**": Shall mean the parcel so designated on the Site Plan on which the Urban Park shall be constructed.

2. **PREPARATION OF PLANS AND SPECIFICATIONS**.

A. Beginning prior to the execution hereof, Developer, in combination with the Architect, Engineer and Contractor and the City's staff, has begun, and, following the execution hereof, shall continue, the preparation of schematic designs, development and construction plans, drawings, and specifications pertaining to the City Project, including the Parking Structure Retail Space, and the Urban Park, which designs, plans, drawings and specifications (collectively referred to herein as the "**City's P&S**"), all of which shall be prepared in a manner approved by the City's Representative at the sole cost and expense of the City. The cost of the construction of the City Project shall not exceed Six Million Dollars ($6,000,000) and the cost of the construction of the Urban Park shall not exceed Eight Hundred Thousand Dollars ($800,000), both inclusive of design fees and exclusive of City financing costs and administrative fees. The City hereby acknowledges that the preliminary design for the City Project and Urban Park is acceptable to the City. Following the execution hereof, Developer shall continue the preparation of designs, design development and construction plans, drawings and specifications related to the Douglas Place

Building renovation, which designs, plans, drawings and specifications (collectively referred to herein at the "**Developer's P&S**"), shall be prepared at the sole cost and expense of the Developer. Following the execution hereof by all parties, the Developer shall contract with the Architect (using AIA Document B101) separately for its services and the Engineer's Services relating to the City Project and the design work for the Urban Park (the form of which contract is attached hereto as Exhibit "5" and any proposed changes thereto shall be reviewed and approved by the City's legal department and the City's Representative in addition to the Developer), and the Developer Project, excepting the Urban Park. The Developer shall assign and the City shall assume the contract relating to the City Project following such review and approval. Such Architect's and Engineer's contract with the City shall provide that such service providers shall invoice the City each month for their fees and expense reimbursements for such services, following the execution hereof. Developer shall invoice the City, through the City's Representative, for the design fees and expenses of the Urban Park Architect and Engineering contract and the City shall remit full payment to Developer within twenty (20) days following the City's Representative's receipt thereof. The initial invoice from Developer to the City shall be submitted on or after the Date to Proceed as defined in subparagraph 6.D below and shall include all such fees and expenses incurred prior to the date hereof. The Developer shall pay such service providers directly pursuant to their respective invoices for the Urban Park within the time period provided by such contract, subject, however, to its prior receipt of sufficient funds from the City. Developer shall not incur fees or expenses for the Architect's and Engineer's services rendered after the execution of this Agreement and prior to the Date to Proceed in connection with the preparation of the preliminary City's P&S in excess of Fifty Thousand Dollars ($50,000). The Architect's and Engineer's fees and expenses shall be specified in Architect's contract. Subject to the satisfaction or written waiver of the conditions precedent contained in paragraph 6 of this Agreement, the parties intend to proceed on a "design/bid" basis in connection with the City Project and on a "design/build" basis in connection with the Urban Park, and shall proceed

expeditiously hereafter to complete plans and specifications in sufficient detail to estimate as closely as possible the cost of constructing the Urban Park and to proceed with public bidding of construction of the City Project. Following the Date to Proceed, the Developer shall invoice the City, and the City shall reimburse Developer for all direct costs associated with the City Architect Contract that occurred prior to execution of this Agreement. Developer shall not receive any compensation for its services hereunder related to the City Project and Urban Park, but shall be reimbursed for all third party costs and expenses which are preapproved in writing by the City's Representative.

B. In connection with the preparation of City's and Developers' P&S's, Developer and the City's Representative may revise the Project Budget from time-to-time with the Architect, Engineer and Contractor; provided, the City Project and Urban Park budgets shall not be increased without City Council approval.

3. **LEASE EXECUTION; CONTRACT ASSIGNMENT; PROHIBITED ACTIVITIES**.

Promptly following Date to Proceed, as defined in subparagraph 6. D below:

A. The City and Developer shall execute the Parking Structure Retail Lease (in the form of Exhibit "1" hereto). The term of the Parking Structure Retail Lease shall not commence until such structure and the Parking Structure Retail Space have been issued a Certificate of Occupancy.

B. Developer shall cause Marketplace Properties, LLC to assign to the City, and the City shall assume the Parking and Urban Park Purchase Contract, upon the City's satisfaction of the condition precedent contained in subparagraph 6.A.ii below. In the event of any conflict between such contract and this Agreement, this Agreement shall control. At the time of closing the purchase of such real estate, the City shall reimburse the assignor for amount of the earnest money deposited pursuant to such contract.

C. Prior to the Date to Proceed, the Developer, regarding the Douglas Place Parcel, and Slawson, regarding the Slawson Parcel, shall execute and record in the Sedgwick County,

Kansas real estate recording office a restrictive covenant, which covenant shall be substantially in the form attached hereto as Exhibit "6," for the purpose of prohibiting the use of their respective parcels for the Prohibited Activities.

4. **PARKING ARRANGEMENTS**.

A. Promptly following the Date to Proceed, the City and the Developer shall execute an agreement (the "Developer's Parking Agreement") to lease 125 undesignated parking spaces within the Parking Structure for use by the employees, occupants, invitees and licensees of the Douglas Place Building 24 hours for each day during the term on a come for come and go use with guaranteed availability, which Developer's Parking Agreement shall be in the form attached hereto as Exhibit "7." The initial ten year term and subsequent one year renewal periods of the Developer's Parking Agreement shall extend for an aggregate of fifty (50) years. The Parking Structure shall be designed to include technology which allows automated access/departure and tracking of the usage of the 125 parking spaces leased under the Developer's Parking Agreement as well as usage of parking spaces by the employees, invitees and licensees related to the Slawson Building as referenced in subparagraph 4.B below. The parking fee under the Developer's Parking Agreement shall accrue beginning the first day of the operation of the hotel on the Douglas Place Parcel. Assuming the Parking Structure is completed and ready for use, accrual of parking fees shall commence no later than January 1, 2013. The parking rate shall be an amount equal to sixty percent (60%) the operating expenses of Parking Structure for each year of the term of the Developer's Parking Agreement but not to exceed Seventy Five Thousand Dollars ($75,000.00) in any year for the initial ten (10) year period and thereafter such maximum amount shall be increased three percent (3%) for each remaining year of the Developer's Parking Agreement. The determination of operating costs shall be made on a calendar year basis, so that unless the commencement date of the Developer's Parking Agreement is January 1, the amount of the fee shall be prorated for the first partial calendar year and the final partial calendar year of the term thereof. The Developer's Parking Agreement contains the full understanding of the

parties concerning the method of determining the "operating costs" of the Parking Structure for each year. The parking fee for each calendar year following the commencement date shall be paid by the Douglas Place Owner within twenty (20) days following the date the City calculates the operating costs for an applicable year and provides such owner with a detailed accounting thereof.

B. Slawson intends to re-develop the Slawson Building when the market conditions permit it to do so and the use of leased parking stalls within the Parking Structure will be required in following such redevelopment. Prior to the Date to Proceed, Slawson and the City shall execute an agreement ("Slawson Parking Agreement") in the form attached hereto as Exhibit "8." The parking shall consist of up to 100 parking stalls for come and go use with guaranteed availability during the period from 8:00 a.m. to 5:00 p.m. during Monday through Friday of each week following the date the Slawson Building is open for business to the public. Up to the maximum number of stalls referenced above, Slawson may increase or decrease the number of parking stalls it requires in the Parking Structure on a monthly basis upon written notice to the City's Representative, or his designee. The parking fee for the required stalls shall be paid by Slawson or its assignee to the City under the Slawson Parking Agreement beginning the first month in which there is occupancy in the Slawson Building and such fee shall be Thirty Dollars ($30) per required stall for the first ten (10) year period thereafter. Following such ten (10) year period, the parking fee shall be adjusted to the lesser of (i) amount generally charged by the City for the monthly rental of public parking stalls in the City owned "State Parking Garage" located at the northeast corner of South Topeka Avenue and East William Street, or (ii) the median monthly rate for a parking stall available for lease within a one-fourth (1/4) mile of the Parking Structure, but any increase shall not exceed three percent (3%) increase per calendar year.

5. **CONSTRUCTION**.

A. The City, working with the Architect, Engineer and Developer, shall proceed with the public bidding of the construction of the City Project promptly following the Date to

Proceed. The City shall use its best efforts to ensure that the construction of the City Project is completed by December 14, 2012, including but not limited to requiring the payment of liquidated damages by the General Contractor, City Project for late completion, which liquidated damages shall be agreed to by the City and Developer and paid to the Developer, subject to mitigation of damages by providing alternative parking spaces that are acceptable to the Developer. The City shall follow standard City procedures to carry out the construction of the City Project. Notwithstanding the foregoing, the total cost of designing, constructing and equipping the City Project shall not exceed Six Million Dollars ($6,000,000), exclusive of City financing costs and administrative fees.

B. As soon as reasonably possible, the Developer shall submit to the City's Representative the proposed form of contract, using AIA Document A133 (Construction Manager At Risk With GMP), for the construction of the Urban Park. Developer shall thereafter conduct such further negotiations and dealings with the General Contractor, Developer Project as is necessary to complete such contract on terms reasonably satisfactory to the City's Representative. Promptly following the Date to Proceed, when the form of such construction contract (the "**Urban Park Construction Contract**") is agreed upon and approved in writing by the City's Representative, the Developer, as the representative of the City, and the General Contractor, Developer Project shall execute the same. The Urban Park Construction Contract shall include a guaranteed maximum amount payable to the General Contractor, Developer Project not to exceed Eight Hundred Thousand Dollars ($800,000) including design fees and costs. The Urban Park Construction Contract shall provide for shared savings between the City and the Contractor based on a fixed percentage fee, which savings shall be shared sixty percent (60%) to the City and forty percent (40%) to the Contractor but the amount payable to the General Contractor shall be limited to one percent (1%) of the total construction costs (excluding design fees and costs) under the Urban Park Construction Contract and the balance of savings over one percent (1%) shall be paid entirely to the City. The Urban Park Construction Contract shall require the General Contractor,

Developer Project to substantially complete construction of the Urban Park on or before December 14, 2012 and shall provide for the completion of as-built construction plans, drawings and specifications for the Urban Park as part of the guaranteed maximum cost. The Urban Park Construction Contract shall provide for monthly payments directly to the General Contractor, Developer Project subject to five percent (5%) retainage on all payments. Upon its receipt of an invoice from the General Contractor, Developer Project, Developer shall verify the same and promptly deliver such invoice to the City's Representative, and the City shall remit payment in full to the General Contractor, Developer Project within twenty (20) days of receiving such invoice. The Urban Park Construction Project shall require the General Contractor, Developer Project to solicit at least three written bids for all subcontracted work unless specifically waived in writing by the City's Representative. Subcontractor bids shall be awarded to the lowest responsible bidder as approved by the Developer and the City's Representative.

C. Developer shall not be compensated for performance of its services to coordinate the construction of the Urban Park hereunder.

6. **CONDITIONS PRECEDENT**.

A. The City's obligation to proceed and complete the design and the construction of the City Project and Urban Park is conditioned upon the satisfaction or waiver by the City of the following items:

i. The City's Representative shall have approved the City's P&S, the City Construction Contract, and the contracts with the Architect and Engineer;

ii. Documented evidence satisfactory to the City's Representative in his sole discretion that the loan for the Developer to acquire the Douglas Place Parcel and Building and to pay the costs and expenses related to the renovation of the Douglas Place Building, as contemplated by this Agreement, along with the Developer's equity funds in the amount of Five Million Two Hundred Fifteen Thousand Dollars ($5,215,000.00), have been funded or committed in manner acceptable to City's Representative;

iii. The City has acquired the Parking Structure Parcel and the Urban Park Parcel pursuant to the Parking and Urban Park Purchase Contract for Seven Hundred Seventy Thousand Dollars ($770,000.00) (subject to prorations contained therein), after being satisfied with the survey and title insurance commitment concerning the same;

iv. The City being reasonably satisfied with the Developer's P&S;

v. The City has completed the adoption of the TIF Project Plan;

vi. The Developer shall have executed and delivered to the City the Tax Payment Agreement in the form attached hereto as Exhibit "9"; and

vii. Developer shall have acquired the Douglas Place Parcel and Building and agreed to or waived all conditions contained in subparagraph B below.

B. Developer's obligation to proceed with the renovation of the Douglas Place Building is contingent upon the satisfaction or waiver of the following matters by Developer, as applicable:

i. Developer's satisfaction with the cost of acquiring, designing and renovating the Douglas Place Building;

ii. Developer's satisfaction that financing sufficient for the costs of acquiring the Douglas Place Parcel and the Douglas Place Building, and designing and remodeling the Douglas Place Building have or will be extended to Developer, all in terms satisfactory to Developer;

iii. The City shall have issued to the Developer concerning the Douglas Place Parcel its standard form of Certificate and Release for Environmental Conditions regarding the Gilbert-Mosley environmental contamination;

iv. Developer shall have acquired the Douglas Place Parcel and Building, after being satisfied with the survey and the title insurance commitment concerning the same;

v. The City shall have extended to the Developer financing based on the City's Façade Improvement Program and concerning the Douglas Place Building, all on terms satisfactory to the Developer;

vi. The Developer and Slawson being reasonably satisfied with the City's P&S;

vii. The City shall have approved the establishment of the Douglas and Broadway Community Improvement District ("**CID**") and the CID Developer Agreement in the form attached hereto as Exhibit "10";

viii. Arrangements satisfactory to Developer shall be made so that seventy-five percent (75%) of the transient guest taxes generated by the hotel in the Douglas Place Building and received by the City will be transferred from the Convention and Tourism Fund by the City to Developer in one lump sum payment each year for fifteen (15) years;

ix. The City shall cooperate with Developer to assist Developer to obtain a sales tax exemption on the cost of purchasing construction materials, furnishings and equipment. If requested to do so by the Developer and subject to subsequent City approvals, the City will issue industrial revenue bonds to provide financing to improve, equip and furnish the Douglas Place Building. The bonds will be privately placed with conventional lenders and will be subject to all conditions set forth in the IRB letter of intent approved on August 8, 2011. The Douglas Place Parcel and Building will not receive a real property tax exemption in connection with such bonds; and

x. The City shall have approved and delivered to Developer written authorization to construct, maintain, repair and replace a porte-cochere on the south side of the Douglas Place Building as shown on the Site Plan without any fee or charge so long as the Douglas Place Building is operated as a hotel.

C. In the event the foregoing contingencies shall not have been fully satisfied or waived in writing on or before October 15, 2012, this Agreement shall, unless otherwise extended by all of the parties, automatically terminate.

D. If all of the foregoing contingencies are fully satisfied or waived in writing by the applicable party or parties, the date of such satisfaction or waiver shall be called the "Date to Proceed."

7. **CONSTRUCTION; PROCEDURES AND RELATED MATTERS**.

A. As soon as reasonably possible following the execution of the construction and design contracts pursuant to this Agreement, the City's Representative, Developer's Representative, the various consultants and both General Contractors shall establish on a mutually agreeable basis the Development Schedule which shall be incorporated into the construction contracts, subject to delays and extensions provided for in such construction contracts.

B. Following the Date to Proceed, Developer's Representative shall coordinate and supervise the General Contractor, Developer Project, as well as the Architect and Engineer, and at all times coordinate with the City's Representative, to pursue the commencement and completion of the Developer Project and the Urban Park in accordance with the applicable contracts. In view of the "build/design" nature of the Developer Project, Developer's Representative shall continue to work with the Architect and Engineer to complete the Developer's P&S and with the City's Representative to complete the plans and specifications for the Urban Park. The City's Representative shall participate fully in such process and have the full right and exclusive opportunity to consider any changes to the plans and specifications for the Urban Park. The contract documents shall require the General Contractor, Developer Project to perform the following with respect to the construction of the Developer Project and the construction of the Urban Park:

i. Conduct regular job meetings at which Slawson, Developer's Representative, City's Representative or their designee and all other parties involved in the construction may attend to learn the state of construction, keep minutes of such meetings and furnish copies thereof to Slawson, the City's Representative and Developer's Representative;

ii. Maintain regular logs and provide progress reports concerning the Urban Park, including suggestions for changes in the Development Schedule, to Slawson, the City's Representative and Developer's Representative;

iii. Provide continuous on-site administration of the work of all suppliers and subcontractors; and

iv. Interact with the Architect, Developer's Representative and City's Representative as necessary relative to interpretation of any applicable plans and specifications.

C. Following the Date to Proceed, City's Representative shall coordinate and supervise the General Contractor, City Project, as well as the Architect and Engineer, to pursue the bidding, commencement and completion of the City Project in accordance with the applicable contracts. In view of the "bid/design/build" nature of the City Project, City's Representative shall continue to work with the Architect and Engineer to complete the City's P&S. The City's Representative shall have the full right and exclusive opportunity to consider any changes to the plans and specifications for the Urban Park. The contract documents shall require the General Contractor, City Project to perform the following with respect to the construction of the City Project and the construction of the Urban Park:

i. Conduct regular job meetings at which City's Representative or his or her designee, the Developer's Representative, Slawson and all other parties involved in the construction may attend to learn the state of construction, keep minutes of such meetings and furnish copies thereof to the City's Representative;

ii. Maintain regular logs and provide progress reports concerning the City Project, including suggestions for changes in the Development Schedule, to the City's Representative;

iii. Provide continuous on-site administration of the work of all suppliers and subcontractors; and

iv. Interact with the Architect, Engineer and City's Representative as necessary relative to interpretation of any applicable plans and specifications.

8. **TRANSIENT GUEST TAXES**. Subject to the final enactment of a charter ordinance authorizing such payments, the City shall pay to Developer an amount equal to seventy-five percent (75%) of the transient guest taxes generated by the hotel in the Douglas Place Building in one lump sum payment each year for fifteen (15) years. If Developer requests a special election solely for the purpose of passing the charter ordinance in the event a sufficient protest petition is submitted, Developer shall reimburse the City for the actual out of pocket costs and expenses of conducting such election.

9. **URBAN PARK**. After completion of the Urban Park improvements, the City shall be responsible for maintaining, repairing and replacing all hardscape elements, including the water feature, located on the Urban Park Parcel so that the same shall be in a good appearance and operating condition and the Developer shall be responsible for maintaining, repairing and replacing all landscaping and irrigation system elements located in the Urban Park so that the same shall be in good appearance and operating condition, including the operation of the irrigation system and replacement of plantings. The Developer shall also be responsible for maintaining and operating any water feature located in the Urban Park. The City hereby grants to Developer access to the Urban Park, including the right to construct City-approved improvements therein, to wit a porte-cochere, and to maintain and operate the irrigation system, water feature and landscaping located therein and specifically waives any minor street privilege permits or any and all rights of action in law or equity against the Developer arising from its occupancy and

encroachment on and over said Urban Park. The Developer agrees to protect, indemnify and hold harmless the City from claims for personal injury and/or property damage arising from the collapse or failure of the porte-cochere, from increased cost that may arise from the necessity of construction or repair of public facilities that is caused by the presence of the porte-cochere and from the cost of repair or replacement of the porte-cochere, the irrigation system, and landscaping.

10. **SPECIAL ASSESSMENTS**. No special assessment shall be assessed against the Douglas Place Parcel or Building, or the Slawson Parcel or Building, in connection with, or to pay any costs of, the design and/or construction of the City Project and Urban Park. Furthermore, no special assessments shall be assessed against the Parking Structure Retail Space, in connection with, or to pay the costs of, the design and/or construction of the City Project.

11. **DEFAULT; REMEDIES**.

A. In the event any party hereto (whether one or more the "**Defaulting Party**"), shall fail to perform any obligation of such party under this Agreement and shall fail to correct the same within thirty (30) days ("**Cure Period**") after written notice thereof from the party claiming such default (whether one or more, the "**Non-Defaulting Party**") specifying such failure, then the Defaulting Party shall be deemed to be in default hereunder this Agreement; provided, in the event the default can not reasonably be fully cured within such thirty (30) day period of time then no default shall be deemed to exist hereunder so long as the Defaulting Party shall commence curing the same within such thirty (30) day period and shall prosecute the same to completion with reasonable diligence.

B. In the event that any party defaults on its obligations hereunder, then the non-defaulting party or parties may seek a temporary restraining order, an injunction, specific performance or any other equitable relief that the non-defaulting party or parties deem(s) reasonably appropriate. The parties hereby acknowledge that an adequate remedy in damages will not be available upon breach of this Agreement, disclaim recovery of incidental or consequential

damages, and in lieu thereof agree that the parties shall be entitled to pursue the above equitable remedies as reasonably necessary in order to remedy a breach of this Agreement.

12. **MISCELLANEOUS**.

A. Waiver. No provision, requirement, default or breach of this Agreement shall be deemed waived by either party except in writing.

B. Notices. Whenever it is provided in this Agreement that a notice, demand, request, consent, approval or other communication (each of which is herein referred to as a "Notice") shall or may be given to or served upon any of the parties by another and whenever any of the parties shall desire to give or serve upon another party Notice with respect thereto, each such Notice shall be in writing and, any law or statute to the contrary notwithstanding, shall be effective for any purpose, if given or served as follows:

i. If to the Developer, by personal delivery or mailing the same to the Developer by certified or registered mail, postage prepaid, return receipt requested, addressed to the Developer at the address set forth below the signature of Developer hereof, or to such other address(es) and attorneys as the Developer may from time to time designate by notice given to the City and Slawson by certified mail, postage prepaid, return receipt requested, except that at no time shall the City be required to give, in the aggregate, more than four (4) Notices or copies thereof;

ii. If to the City, by personal delivery or mailing the same to the City by certified or registered mail, postage prepaid, return receipt requested, addressed to the City's Representative at the address set forth below the signature of City hereof, or to such other address(es) and attorneys as the City's Representative may from time to time designate by Notice given to the Developer and Slawson by certified mail, postage prepaid, return receipt requested, except that at no time shall the Developer or Slawson be required to give, in the aggregate, more than four (4) Notices or copies thereof;

iii. If to Slawson, by personal delivery or mailing the same to Slawson by certified or registered mail, postage prepaid, return receipt requested, addressed to Slawson at the address set forth below the signature of Slawson hereof, or to such other address(es) and attorneys as Slawson may from time to time designate by Notice given to the Developer and the City by certified mail, postage prepaid, return receipt requested, except that at no time shall the Developer or the City be required to give, in the aggregate, more than four (4) Notices or copies thereof; and

iv. Every Notice shall be deemed to have been given or served on the date of personal delivery or, if mailed, then on the date set forth in the return receipt. In the event a postal strike shall be in progress at the time a Notice is given or served, such Notice shall not be deemed given or served unless and until a copy thereof is personally delivered to the parties entitled thereto.

C. Independent Contractor. In performing their obligations under this Agreement, the Developer and Slawson shall be deemed independent contractors and not agents or employees of the City.

D. Governing Law. This Agreement shall be governed by the laws of the State of Kansas.

E. Assignment. None of the parties may assign this Agreement, or any rights or obligations hereunder.

F. Force Majeure. No party hereto shall be deemed to be in default hereunder where a failure to perform an obligation hereunder is attributable to war, insurrection, strikes, lock-outs, law, riots, floods, earthquakes, fires, casualties, acts of God, acts of public enemy, epidemics or embargoes.

G. Captions. The captions used herein are inserted only as a matter of convenience and for reference and in no way define, limit or describe the scope or the intent of any paragraph hereof.

H. Illegality. If this Agreement contains any unlawful provisions, the same shall be deemed of no effect and shall, upon the application of either party, be deemed stricken from this Agreement without affecting the binding force of the remainder.

I. No Third Party Rights. Nothing in this Agreement shall create or shall give to third parties any claim or right of action against Slawson, the City or the Developer beyond such as may legally exist, irrespective of this Agreement.

J. Modification of Agreement. No change in or modification, termination or discharge of this Agreement in any form whatsoever shall be valid or enforceable unless it is in writing and signed by the party to be charged therewith or its duly authorized representative; provided, however, that any change in or modification, termination or discharge of this Agreement expressly provided for in this Agreement shall be effective as so provided.

K. Entire Agreement. This Agreement constitutes the entire agreement between the parties and incorporates all prior understandings in connection with the subject matter hereof supercedes any letter of intent some, or all, of the parties may have previously executed on the subject matters hereof.

L. Access. The City, Developer, Architect, Engineer and General Contractors, for purposes of performing their respective obligations hereunder, shall be entitled to access to the Project Property subject to construction schedule coordination. As part of receiving access from the City to the Parking Structure Parcel, Developer shall relinquish access to the Parking Structure Parcel within two (2) weeks of receiving a written notice to do so from the City Representative.

M. Time of the Essence. Time is of the essence in the performance of the parties' respective obligations under this Agreement.

N. Cash Basis and Budget Laws. The right of the City to enter into this Agreement is subject to the provisions of the Cash Basis Law (K.S.A. 10-1112 and 10-1113), the Budget Law (K.S.A. 79-2935), and other laws of the State of Kansas. This Agreement shall be construed and

interpreted so as to ensure that the City shall at all times stay in conformity with such laws. The City may delay its performance hereunder to the extent necessary so that the City may be in compliance with the foregoing laws.

O. Non-Discrimination**.** Developer shall comply with all applicable requirements of the City of Wichita Revised Non-Discrimination and Equal Employment/Affirmative Action Program Requirements Statement for Contracts or Agreements attached hereto as Exhibit "11," and requires the same compliance from its agents and independent contractors.

P. Anniversary Report. Developer shall provide an annual report to the City no later than thirty (30) days following the first anniversary date of the Development Agreement. The annual report shall provide an account of all sources and uses of funds to pay private costs of the Developer Project. The City reserves the right to audit the account at its discretion and expense within ninety (90) days following the City's receipt of such report upon a minimum of ten (10) day's advance written notice given to the Developer's Representative. The annual report also shall detail the Developer's progress towards completing all responsibilities and milestones of the Developer's Project completion identified in the Development Agreement

[Signature pages follow.]

IN WITNESS WHEREOF, the parties have hereunto set their hands as of the day and year aforesaid.

_____, 2011

THE CITY OF WICHITA

By: _____
Carl Brewer, Mayor

"CITY"

ATTEST:

By: _____
Karen Sublett, City Clerk

Address for Notice Purposes:

City of Wichita
455 N. Main, 13th Floor
Wichita, KS 67202
Attn: Robert Layton, City Manager

APPROVED AS TO FORM:

By: _____
Gary E. Rebenstorf
City Attorney

_____, 2011

DOUGLAS PLACE, LLC,
a Kansas Limited Liability Company

By: _____
David C. Burk, Member and Manager

"DEVELOPER"

Address for Notice Purposes:

David C. Burk
Market Place Properties, L.L.C.
151 N. Rock Island, Suite 1A
Wichita, Kansas 67202

_____, 2011

SLAWSON INVESTMENT CORPORATION

By: _____
Jerry Jones, _____

'SLAWSON'

Address for Notice Purposes:

Jerry Jones
Slawson Investments Corporation
727 N. Waco Avenue, Suite 400
Wichita, Kansas 67203

Exhibits:

Exhibit 1	Form of the Parking Structure Retail Lease
Exhibit 2	Prohibited Activities
Exhibit 3	Preliminary Nondetailed Budget Overview for the Project
Exhibit 4	Site Plan
Exhibit 5	Architect's Contracts
Exhibit 6	Form of Restrictive Covenant
Exhibit 7	Developer's Parking Agreement
Exhibit 8	Slawson Parking Agreement
Exhibit 9	Form of Tax Payment Agreement
Exhibit 10	CID Developer Agreement
Exhibit 11	City of Wichita Revised Non-Discrimination and Equal Employment/Affirmative Action Program Requirements Statement

Exhibit 1

Form of the Parking Structure Retail Lease

Exhibit 2

Prohibited Activities

The following is a list of Prohibited Activities:

A. Adult Book and Video Stores
B. Community Correction Facilities
C. Half-way Houses
D. Drug or Alcohol Rehabilitation Facilities
E. New or Used Car Lots
F. Multi-game, casino-style Gambling Facilities unless hereafter approved by the City
G. Commercial Billboards

Exhibit 3

Project Budget

City:

Design/Construction Cost	
Parking Structure, including Parking Structure Retail Space	$6,000,000.00
Urban Park	$800,000.00
Land Purchase	$ 770,000.00
Total City	$7,570,000.00

Developer:

Hotel Construction, FF&E and Soft Costs	$19,315,000.00
Land and Building	$ 2,600,000.00
Total Developer	$21,915,000.00
Total Project	$29,485,000.00

Exhibit 4

Site Plan

Exhibit 5

City's Architect's Contracts

Exhibit 6

Form of City's Restrictive Covenant

Exhibit 7

Developer's Parking Agreement

Exhibit 8

Slawson Parking Agreement

Exhibit 9

Form of Tax Payment Agreement

Exhibit 10

Form of CID Development Agreement

Exhibit 11

Form of City of Wichita Revised Non-Discrimination
And Equal Employment /Affirmative Action Program Requirements Statement

COMMUNITY IMPROVEMENT DISTRICT DEVELOPMENT AGREEMENT

THIS DEVELOPMENT AGREEMENT (this "Agreement"), is made and entered into this _____ day of _____, 2011 by and between the **CITY OF WICHITA, KANSAS**, a municipal corporation duly organized under the laws of the State of Kansas (the "City"); and **Douglas Place, LLC**, (the "Developer") (with the "Developer" and the "City" collectively referred to as the "Parties" and each a "Party").

RECITALS

A. The City has authority to create a community improvement district ("CID"), pursuant to K.S.A. § 12-6a26 *et seq*. (the "CID Act"), for the purpose of financing certain public and private improvements as defined therein. Under the CID Act, the owners of at least 55% of the total assessed value and land area within the proposed CID boundaries may petition the City to request the creation of a CID and to impose special assessments or a community improvement district sales tax to pay the cost of eligible projects.

B. The Developer is the owner of certain land in the City located at 104 South Broadway Avenue within the City (the "Project").

C. On August 17, 2011, the Developer, and CCC Investments, LLC, as 100% property owners within the Project, submitted a petition (the "Petition") to the City requesting the formation of a community improvement district (the "District"). A copy of the Petition is attached hereto as **Exhibit A**. A legal description and map of the boundaries of the District is set forth on **Exhibit B** attached hereto.

D. On _____, 2011, the City approved the creation of the District through the adoption of Ordinance No. _____ (the "CID Ordinance"). As was contemplated in the Petition, the CID Ordinance approved certain public and private improvements within the District (the "CID Improvements"), as well as certain administrative and operating expenses to be incurred within the District, as more particularly described on **Exhibit C** attached hereto (collectively, the "CID Costs"), to be financed with pay-as-you-go financing payable from revenues received from the imposition of an additional 2% sales tax on all taxable sales within the District (the "CID Sales Tax"). The CID Sales Tax shall commence following submittal by the City of a certified copy of the CID Ordinance to the Kansas Department of Revenue. Submittal to the Kansas Department of Revenue shall occur following publication of the CID Ordinance and written notice to the City from the Developer requesting submittal.

E. The Parties now desire to enter into this Agreement to formalize the construction and financing of the CID Improvements.

NOW, **THEREFORE**, in consideration of the foregoing and in consideration of the mutual covenants and agreements herein contained, and other good and valuable consideration, the receipt and sufficiency of which are hereby acknowledged, the Parties hereby agree as follows:

ARTICLE I
DEFINITIONS AND RULES OF CONSTRUCTION

A. Definitions of Words and Terms. Capitalized words used in this Agreement shall have the meanings set forth in the Recitals to this Agreement or they shall have the following meanings:

1. "Administrative Service Fee" means the fee charged by the City for administration of the CID Sales Tax Fund and distributions from same, in the amount of five percent (5%) of the CID Sales Tax collected.

2. "Agreement" means this Agreement as may be amended in accordance with the terms hereof.

3. "CID Act" means K.S.A. § 12-6a26 *et seq*.

4. "CID Bonds" means community improvement district special obligation bonds issued by the City to finance all or a portion of the Project, if any.

5. "CID Costs" means, collectively, the costs of the CID Improvements and other eligible expenses related to the Project to the extent such expenses are "costs" of a "project" as defined in the CID Act, the estimated amounts of which are shown in **Exhibit C**, which also includes the City's administrative service fee. In the event KSA 12-6a27(f) is subsequently amended or construed by a judicial or attorney general's opinion to include in the definition of "cost" interest accrued on borrowed money after the period of construction, post-construction costs of private financing shall then also be deemed included in "CID Costs."

6. "CID Improvements" means the Project and related permissible improvements as set forth in the CID Act and the CID Ordinance.

7. "CID Policy" means the policy of the City of Wichita governing the use of CID financing within the City, as originally approved by the City Council on April 6, 2010 and as amended from time-to-time thereafter.

8. "CID Ordinance" means Ordinance No. _____ adopted by the City on _____, 2011.

9. "CID Sales Tax" means the community improvement district sales tax authorized by the CID Act and the CID Ordinance.

10. "CID Sales Tax Fund" means the separate fund established by the City for deposit of the CID Sales Tax received from the State collected within the District, and that is used to finance the CID Costs pursuant to the CID Act.

11. "City" means the City of Wichita, Kansas.

12. "City Representative" means the City Manager or his or her designee as evidenced by a written certificate furnished to the Developer containing the specimen signature of such person or persons and signed by the City Manager.

13. "Developer" means Douglas Place, LLC, and its successors and assigns.

14. "Event of Default" means any event or occurrence as defined in Article V of this Agreement.

15. "Parties" means the City and the Developer.

16. "Pay-as-you-go Financing" means pay-as-you-go financing, as that term is defined in the CID Act, which financing shall be used to pay the CID Costs.

17. "Signage" means a sign at least 24 square inches in size containing the words: "THIS PROJECT MADE POSSIBLE BY COMMUNITY IMPROVEMENT DISTRICT FINANCING" using type face of at least 18 points in size, and directing individuals to the City website for further information using type face of at least 12 points in size.

18. "State" means the State of Kansas.

19. "Term" means the earlier of twenty-two (22) years from the date the Director of Taxation for the State of Kansas begins collecting the CID Sales Tax within the District or when all CID Costs up to the amount of $2,560,000 have been paid.

B. Rules of Construction. For all purposes of this Agreement, except as otherwise expressly provided or unless the context otherwise requires, the following rules of construction apply in construing the provisions of this Agreement:

1. The terms defined in this Article include the plural as well as the singular.

2. All accounting terms not otherwise defined herein shall have the meanings assigned to them, and all computations herein provided for shall be made, in accordance with generally accepted accounting principles.

3. All references herein to "generally accepted accounting principles" refer to such principles in effect on the date of the determination, certification, computation or other action to be taken hereunder using or involving such terms.

4. All references in this instrument to designated "Articles," "Sections" and other subdivisions are to the designated Articles, Sections and other subdivisions of this instrument as originally executed.

5. The words "herein," "hereof" and "hereunder" and other words of similar import refer to this Agreement as a whole and not to any particular Article, Section or other subdivision.

6. The Article and Section headings herein are for convenience only and shall not affect the construction hereof.

ARTICLE II
DEVELOPMENT OF THE PROJECT

A. Completion of the CID Improvements. Any of the CID Improvements completed by the Developer shall be in conformance with approved plans for such improvements, City building codes, City Ordinances and all other applicable rules and regulations. Before commencement of construction or development of any buildings, structures or other work or improvement, the Developer shall obtain any and all permits which may be required by the City and any other governmental agency having jurisdiction as to such construction, development or work.

B. Cost of the Project. The Developer shall be responsible for and will bear all the CID Costs, subject to the terms of this Agreement governing reimbursement for expenditures on the CID Costs.

ARTICLE III
CID FINANCING

A. CID Sales Tax. The City shall deliver a certified copy of the CID Ordinance to the Kansas Department of Revenue imposing the CID Sales Tax upon the receipt of written notice from the Developer requesting such delivery. Except as otherwise set forth herein, all of the CID Sales Tax collected and delivered to the CID Sales Tax Fund shall be available for and dedicated to pay the CID Costs for the duration of the Term.

B. CID Sales Tax Fund. During the existence of the District all CID Sales Taxes generated within the District shall be deposited into a CID Sales Tax Fund, which shall be established and administered by the City in compliance with the laws of the State of Kansas and this Agreement and shall be held solely for the payment of the CID Costs and shall not be otherwise expended or commingled with other funds.

C. Pay-as-you-go Financing of the CID Costs. The CID Sales Tax shall be used to reimburse the Developer for the CID Costs, as estimated in **Exhibit C**. The City hereby agrees that the estimates of expenses related to the CID Costs may change prior to and during the expenditure of the CID Costs. However, the aggregate total amount of all CID Costs to be paid hereunder shall not exceed $2,560,000. Unless otherwise agreed by the Parties in writing in this Agreement or otherwise, reimbursements shall be made solely to the Developer, except for payment of the City's Administrative Service Fee, which will be deducted by the City in advance of distribution of the CID Sales Tax funds to Developer.

D. Certification of Expenditures. The Developer shall certify all costs and expenditures to be made in connection with the CID Costs in accordance with the following:

1. The Developer shall submit to the City a Certification of Expenditures in the form attached hereto as **Exhibit D** setting forth the amount for which reimbursement is sought and an itemized listing of the related CID Improvements.

2. Each Certification of Expenditures shall be accompanied by such bills, contracts, invoices, and other evidence as the City shall reasonably require to document appropriate payment.

E. Reimbursement. The City shall have twenty (20) calendar days after receipt of any Certification of Expenditures to review and respond by written notice to the Developer. If the submitted documentation demonstrates that: (1) the Certification of Expenditures shows payment by the Developer of the CID Costs; (2) the expense was incurred; (3) the aggregate amount of CID Costs theretofore paid pursuant to this Agreement is less than $ [Maximum Amount Established in Ordinance]and if added to the amount of the Certification of Expenditures, would not exceed $2,560,000; (4) the Developer is not in material default under this Agreement; and (5) there is no fraud on the part of the Developer, then the City shall approve the Certification of Expenditures and promptly reimburse the Developer for the CID Costs pursuant to the terms of this Agreement if sufficient funds are available in the CID Sales Tax Fund, and quarterly as funds become available in the event that funds in the CID Sales Tax Fund are at that time insufficient. If the City reasonably disapproves of the Certification of Expenditures, the City shall notify the Developer in writing of the reason for such disapproval within such twenty (20) day period.

F. Payment of the City's Administrative Service Fee. The City shall be paid from the CID Sales Tax Fund an Administrative Service Fee in an amount equal to five percent (5%) of the total CID revenues generated within the District. The $5,000 application fee paid by Developer upon submission of this Agreement to the City shall be applied as a credit toward payment of the Administrative Service Fee.

ARTICLE IV
CID BOND ISSUANCE

A. CID Bonds. Notwithstanding anything in this Agreement to the contrary, the Developer may request, in accordance with the City's CID Policy, the issuance of special obligation bonds to pay the CID Costs issued in one or more series payable from the CID Sales Tax and on terms mutually agreeable to the Parties (the "CID Bonds").

B. CID Bond Fund. If the CID Bonds are issued by the City, a CID bond fund shall be created and administered by the City or its designee and will be utilized solely to repay the CID Bonds. The specifics of the issuance and repayment of the CID Bonds shall be in accordance with the bond documents for such issuance, to be approved by City ordinance, and in accordance with this Agreement. Upon issuance of the CID Bonds, the net bond proceeds of the issuance of such bonds shall be disbursed to the Developer by the City or bond trustee for the purpose of funding the CID Costs in accordance with the terms of this Agreement and the bond documents of such issuance.

C. Privately Placed Bonds. The Developer may request to have the CID Bonds privately placed and sold to (i) institutional investors including, without limitation, insurance companies, funds and state or federally charted financial institutions, and/or (ii) the Developer and/or entities related to or affiliated with the Developer.

D. No Full Faith and Credit Bonds. The Parties agree that any CID Bonds shall be special obligation bonds only and shall not be general obligation bonds backed by the full faith and credit of the City.

ARTICLE V
DEFAULTS AND REMEDIES

A. Defaults - General. Subject to the extensions of time set forth in subsection G below (Enforced Delay), failure or delay by any Party to perform any material term or provision of this Agreement, after receiving written notice thereof and failing to cure, as set forth in paragraph B below, constitutes an "Event of Default" under this Agreement. The Party claiming a default ("Claimant") shall give written notice of default to the defaulting Party, specifying the nature of the default.

B. Default Proceedings. The Claimant shall not institute proceedings against a defaulting Party, nor be entitled to damages if the defaulting Party within fourteen (14) days from receipt of the written notice of default set forth in paragraph A above, with due diligence commences to cure, correct or remedy such failure or delay and shall complete such cure, correction or remedy within thirty (30) days from the date of receipt of such notice; or if such cure, correction or remedy by its nature cannot be effected within such thirty (30) day period, such cure, correction or remedy is diligently and continuously prosecuted until completion thereof.

C. Remedies on Default. Whenever any Event of Default by the City shall have occurred and be continuing, subject to applicable cure periods, the Developer may pursue any remedy at law and in equity, except as provided below. Whenever any Event of Default by the Developer shall have occurred and be continuing, subject to applicable cure periods, the City may (1) pursue any remedy at law and in equity, except as provided below, and/or (2) refuse to approve any further Certificates of Expenditures and make any disbursements until such Event of Default is cured by the Developer. If two or more Events of Default by the Developer occur and continue beyond applicable cure periods, within a successive 12-month period, the City shall, in addition to the remedies set forth in the preceding sentence, have the option to terminate this Agreement. Notwithstanding any other provision of this Agreement to the contrary, in no event shall the Developer or the City ever be liable for any punitive, special, incidental, or consequential damages in connection with this Agreement, or otherwise. For the purposes of this Section, consequential damages shall include, but not be limited to, lost profits, lost tax revenue, or other similar losses which are not direct out-of-pocket costs incurred by the non-defaulting Party. Further, specific performance shall not be available to the City to require the Developer to construct any improvements within the District. The only remedy that may be sought from the City is strictly limited to use of CID revenues available in the CID Fund to pay CID Costs (i.e., the City can have no liability under this Agreement that in any way extends to its general or tax funds, or any other source of funds apart from the CID revenues derived from this project), except that, in case of any diversion by the City of CID revenues from the CID Fund in breach of this Agreement, the City will be obligated to restore such diverted revenues, dollar for dollar, from any lawfully available source of appropriations.

D. Legal Actions.

1. Institution of Legal Actions. Any legal actions related to or arising out of this Agreement must be instituted in the District Court of Sedgwick County, Kansas or, if federal jurisdiction exists, in the Federal District Court in the District of Kansas.

2. Applicable Law. The laws of the State of Kansas shall govern the interpretation and enforcement of this Agreement.

3. Acceptance of Service of Process.

(a) In the event that any legal action is commenced by the Developer against the City, service of process on the City shall be made by personal service upon the City Clerk or in such other manner as may be provided by law.

(b) In the event that any legal action is commenced by the City against the Developer, service of process on the Developer shall be made by personal service upon the registered agent of the Developer and shall be valid whether made within or without the State of Kansas or in such other manner as may be provided by law. In the event the Developer no longer has a registered agent to serve, the Secretary of State is hereby irrevocably appointed to accept service for the Developer.

E. Rights and Remedies Are Cumulative. Except as otherwise expressly stated in this Agreement, the rights and remedies of the Parties are cumulative, and the exercise by a Party of one or more of such rights or remedies shall not preclude the exercise by it, at the same or different times, of any other rights or remedies for the same default or any other default by the other Party.

F. Inaction Not a Waiver of Default. Any failures or delays by a Party in asserting any of its rights and remedies as to any default shall not operate as a waiver of any default or of any such rights or remedies, or deprive such Party of its right to institute and maintain any action or proceedings which it may deem necessary to protect, assert or enforce any such rights or remedies.

G. Enforced Delay; Extension of Times of Performance.

1. In addition to specific provisions of this Agreement, performance by a Party hereunder shall not be deemed to be in default, and all performance and other dates specified in this Agreement shall be extended, where the Party seeking the extension has acted diligently and delays or defaults are due to delay or default of the other Party, war, insurrection, strikes, lockouts, riots, floods, earthquakes, fires, casualties, acts of God, acts of the public enemy, epidemics, market conditions, quarantine restrictions, freight embargoes, lack of transportation, or unusually severe weather, or any other causes beyond the control or without the fault of the Party claiming an extension of time to perform.

2. Times of performance under this Agreement may also be extended in writing by the mutual agreement of the City and the Developer.

ARTICLE VI
GENERAL PROVISIONS

A. Termination of the CID. The City shall not terminate the CID prior to the expiration of its Term, except as provided by law, or as requested by the Developer.

B. Modification of the District. From time to time during the Term, the Developer may request, and the City shall reasonably consider, any modification to the District, in accordance with the CID Act and the CID Policy.

C. Public Disclosure. The Developer will post Signage adjacent to the main entrance of the property. Signage is to be posted and maintained throughout the term of the CID and Agreement.

D. Amendment. This Agreement, and any exhibits attached hereto, may be amended only by the mutual written consent of the Parties, upon official action of the City's governing body approving said amendment, and by the execution of said amendment by the Parties or their successors in interest. If any provision, covenant, agreement or portion of this Agreement, or its application to any person, entity or property, is held invalid, the Parties shall take such reasonable measures including, but not limited to, reasonable amendment of this Agreement to cure such invalidity where the invalidity contradicts the clear intent of the Parties in entering into this Agreement.

E. Assignment. No Party may assign all or any part of its interest in this Agreement without the prior written consent of the other Party, and any such assignment without such consent shall be void; except that Developer, with prior written notice to the City, may make a collateral assignment of 100% its rights under this Agreement to a single financial institution as security for a financing of the Project, or to an affiliate wholly owned by or commonly controlled with Developer.

F. Right to Inspect. The Developer agrees that the City, with reasonable advance notice and during normal business hours, shall have the right and authority to review, inspect, audit, and copy, from time to time, all of the Developer's books and records relating to the CID Costs as pertinent to the purposes of this Agreement.

G. Right of Access. For the purposes of assuring compliance with this Agreement, the City Representative shall have the right of access to the District, without charges or fees, during normal business hours for purposes related to this Agreement, including, but not limited to, the inspection of the work being performed in constructing any of the CID Improvements.

H. No Other Agreement. Except as otherwise expressly provided herein, this Agreement and all documents incorporated herein by reference supersede all prior agreements, negotiations and discussions, both written and oral, relative to the use of CID Funds for the Project and is a full integration of the agreement of the Parties.

I. Severability. If any provision, covenant, agreement or portion of this Agreement, or its application to any person, entity or property, is held invalid or unenforceable in whole or in part, this Agreement shall be deemed amended to delete or modify, in whole or in part, if necessary, the invalid or unenforceable provision or provisions, or portions thereof, and to alter the balance of this Agreement in order to render the same valid and enforceable. In no such event shall the validity or enforceability of the remaining valid portions hereof be affected.

J. Notice. All notices and requests required pursuant to this Agreement shall be in writing and shall be sent as follows:

To the Developer:

Douglas Place, LLC

Attention: David C. Burk, Managing Member

Market Place Properties, LLC
151 N. Rock Island, Suite 1A
Wichita, Kansas 67202

With copies to:

_____
_____
_____
_____

To the City:

City Manager
City Hall, 13th Floor
455 N. Main
Wichita, Kansas 67202

With copies to:

Urban Development Office
Attention: Allen Bell
City Hall, 13th Floor
455 N. Main
Wichita, Kansas 67202

or at such other addresses as the Parties may indicate in writing to the other either by personal delivery, courier, or by certified mail, return receipt requested, with proof of delivery thereof. Mailed notices shall be deemed effective on the third day after mailing; all other notices shall be effective when delivered.

K. Counterparts. This Agreement may be executed in several counterparts, each of which shall be an original and all of which shall constitute but one and the same agreement.

L. Recordation of Agreement. The Parties agree to execute and deliver a memorandum of this Agreement in proper form for recording in the real property records of Sedgwick County, Kansas, upon the request of a Party.

M. Consent or Approval. Except as otherwise provided in this Agreement, whenever consent or approval of either Party is required, such consent or approval shall not be unreasonably withheld.

N. Survivorship. Notwithstanding the termination of this Agreement, the Developer's obligations set out in Article II and Sections V C and D shall survive the termination of this Agreement to the extent that any incident giving rise to a claim, suit, judgment or demand occurred during the Term hereof.

O. Incorporation of Exhibits. The Exhibits attached hereto and incorporated herein by reference are a part of this Agreement to the same extent as if fully set forth herein.

[Signatures on Following Pages]

IN WITNESS WHEREOF, the City and the Developer have duly executed this Agreement pursuant to all requisite authorizations as of the date first above written.

CITY OF WICHITA, KANSAS

_____
Carl Brewer, Mayor
Dated**:** _____

ATTEST:

_____
_____, City Clerk

APPROVED AS TO FORM:

_____
Gary Rebenstorf, City Attorney

STATE OF KANSAS)
) ss.
COUNTY OF SEDGWICK)

Appeared before me today, this _____ day of _____, 201_, Carl Brewer, personally known to me and after first being sworn did state that he is the Mayor of the City of Wichita, State of Kansas, and that the seal affixed to the foregoing instrument is the official Seal of the City of Wichita, and that said instrument was signed and sealed on behalf of the City, and that the matters set forth herein are true and correct to the best of his and the City's knowledge, information and belief, and acknowledge that he executed the same on behalf of the City as its free act and deed.

_____
Notary Public

My Commission Expires:

DOUGLAS PLACE, LLC

By: _____
Name: David C. Burk, Managing Member
Date:

STATE OF (_____)
) ss.
COUNTY OF (_____)

On this _____ day of _____, 201__, before me personally appeared _____ to me personally known, who being by me duly sworn did say that he/she is the _____of **Douglas Place, LLC**, and that said instrument was signed and delivered on behalf of said limited liability company and acknowledged to me that he/she executed the same as the free act and deed of said limited liability company.

In Testimony Whereof, I have hereunto set my hand and affixed my official seal the day and year first above written.

_____
NOTARY PUBLIC

My Commission Expires:

_____
[SEAL]

EXHIBIT LIST

EXHIBIT A – CID PETITION

EXHIBIT B – LEGAL DESCRIPTION AND MAP EXHIBIT OF DISTRICT

EXHIBIT C – CID COSTS

EXHIBIT D – CERTIFICATION OF EXPENDITURESS FORM

EXHIBIT A
CID PETITION

EXHIBIT B
LEGAL DESCRIPTION

Lots 1, 3, and 5 on Douglas Avenue, N.A. English's Addition, City of Wichita, Sedgwick County, Kansas

EXHIBIT "B"

Proposed Douglas and Broadway Community Improvement District
City of Wichita, Kansas
Proposed Douglas and Broadway Community Improvement District
Property Parcels within District
Property Parcels outside District
Software: ArcGIS 10
Hardware: Dell Xeon
Printer: Lanier
Map Data Source: Property Parcels provided by Sedgwick County GIS
Road Centerlines provided by City of Wichita
GIS
WICHITA
NORTH
N TOPEKA AVE
S TOPEKA AVE
E DOUGLAS AVE
E WILLIAM ST
N BROADWAY AVE
S BROADWAY AVE
400
401
121
214
100
331
323
311
309
104
113
119
123
114
124
201
200
224
222
220
210
206
105
223
221
219
217
205
230
120
130
229
207
209
208

EXHIBIT C
CID COSTS

Property Purchase:	$ 2,600,000
Renovation of the Douglas Building:	$ 14,300,
FF&E:	$ 1,675,000
Soft Costs:	$ 2,765,000
Contingency:	$ 600,000
Total:	$21,940,000

EXHIBIT D
CERTIFICATION OF EXPENDITURES

Request No. _____ Date:_____

Pursuant to the Development Agreement (the "Agreement") for the **Douglas and Broadway** community improvement district between the City of Wichita, Kansas and the undersigned (the "Developer"), the Developer requests reimbursement and hereby states and certifies as follows:

1. The date and number of this request are as set forth above.

2. All terms in this request shall have and are used with the meanings specified in the Agreement.

3. The names of the persons, firms or corporations to whom the payments have been made and reimbursement is hereby requested, the amounts to be reimbursed and the general classification and description of the costs for which each obligation requested to be reimbursed hereby was incurred are as set forth on **Attachment I** hereto.

4. These costs have been incurred and are reasonable costs that are reimbursable under the Agreement.

5. Each item listed above has not been previously reimbursed from the CID Sales Tax Fund and no part thereof has been included in any other Certification of Expenditures or other disbursement request previously filed with the City.

Douglas Place, LLC

By: _____
Title: _____

Approved this ____ day of _____, 20__

CITY OF WICHITA

By: _____
City Representative

ATTACHMENT I
TO CERTIFICATION OF EXPENDITURES

REQUEST NO. _____ DATED_____

SCHEDULE OF PAYMENTS REQUESTED

Person, firm or corporation to whom payment was made	Amount to be reimbursed	General classification and description of the costs of issuance for which the Obligation to be reimbursed was incurred

Exhibit 9

AFTER RECORDING, RETURN TO:
Ron H. Harnden
Triplett, Woolf & Garretson, LLC
2959 N. Rock Rd., Suite 300
Wichita, Kansas 67226

TAX PAYMENT AGREEMENT

This Tax Payment Agreement ("Agreement") is entered into as of this ___ day of_____, 2011, by Douglas Place, LLC, a Kansas limited liability company ("Developer"), to and for the benefit of the City of Wichita, Kansas, Attn: City Manager, 455 N. Main, 13th Floor, Wichita, Kansas 67202 ("City").

RECITALS:

A. Developer currently owns the real property and improvements thereon legally described on Exhibit A attached hereto ("Douglas Place Property"). The owner of the Douglas Place Property at any point in time is referred herein as the "Douglas Place Owner."

B. The City owns and will construct a parking facility on real property nearby the Douglas Place Property and has agreed to extend to Developer parking rights and other incentives to develop the Douglas Place Property as a hotel (the "Hotel").

C. As a material inducement to the City for such development incentives and parking arrangements extended to the Developer by the City, and for other good and valuable consideration, the receipt of which is herby irrevocably acknowledge, the Developer agrees as provided herein.

NOW, THEREFORE, for good and valuable consideration, the receipt and sufficiency of which is hereby acknowledged, the parties agree as follows:

1. If the ad valorem taxes are levied with regard to the Douglas Place Property for any calendar year following the initial calendar year (the, "Initial Year") during which the Hotel is completed (the "Completion Date") through calendar year 2030 are less ("Tax Deficiency") than Two Hundred Forty-Five Thousand Dollars ($245,000.00), the Douglas Place Owner shall within sixty (60) days following receipt of the tax statement for the applicable year pay to the City, an amount of money equal to the amount of the Tax Deficiency. As an illustration of the forgoing, if the ad valorem taxes levied for any calendar year beginning with or after the Initial Year are $200,000.00, then the Tax Deficiency shall be Forty Five Thousand Dollars ($45,000.00) for such year. From and after the Initial Year, throughout the term hereof, the Douglas Place Owner shall provide a copy of the tax statement pertaining to the Douglas Place Property to the City Manager promptly following its receipt thereof. In the event based on the tax statement for any such calendar year there is a Tax Deficiency, the Douglas Place Owner shall remit payment of the Tax Deficiency to the City within sixty (60) days following its receipt of the tax statement for such calendar year.

2. If the Douglas Place Owner fails to timely pay any sum due hereunder to the City, the delinquent sum shall bear interest at the rate of ten percent (10%) per annum, until the

delinquent sum and accrued interest are paid in full. City shall have all rights and remedies available at law or equity in the event of a default by the Douglas Place Owner under this Agreement.

3. The Douglas Place Owner shall not contest or protest the amount of the ad valorem taxes or the tax valuation regarding the Douglas Place Property prior to calendar year 2031 unless the tax valuation for the Douglas Place Property as shown on the tax statement for the applicable year exceeds the Cap Rate Valuation as defined below. As used above the "Cap Rate Valuation" shall mean the value determined for the Douglas Place Property for the applicable calendar year by dividing the net income derived for the 12-month period immediately preceding the Developer's receipt of the applicable tax statement by the then generally prevailing cap rate for properties substantially equivalent to the Douglas Place Property. The net income shall be determined in accordance with applicable industry standards and the "cap rate" shall be the rate applicable at that time concerning properties substantially equivalent to the Douglas Place Property. Developer shall select a nationally recognized real estate appraisal firm acceptable to the City (such as PKF) that publishes Cap Rates for equivalent hotels. The Cap Rate to be used by the Developer to calculate the Cap Rate Valuation shall be the mid-point of the spread of the published Cap Rates. If the Cap Rate Valuation is less than the tax valuation of the Douglas Place Property as shown on the tax statement for the applicable year and Developer desires to proceed with the tax contest or protest, Developer shall provide a copy of the published Cap Rates and calculation to the City Manager prior to the commencement of such contest or protest. If Developer has the right to contest or protest the ad valorem taxes for any calendar year pursuant to the forgoing prior to 2031, such contest or protest shall not in any event reduce the ad valorem taxes for the Douglas Place Property below Two Hundred Forty-Five Thousand Dollars ($245,000).

4. This Agreement shall run with the land and shall be binding upon the successors, assigns, and grantees of all or any part of the Douglas Place Property.

5. This Agreement shall be governed by Kansas law. This Agreement may not be modified or terminated without the prior written consent of the owner of the Douglas Place Owner and the City. This Agreement shall be binding upon and inure to the benefit of the parties hereto and their respective heirs, legal representatives, successors and assigns.

Executed as of the day and year first above written.

Developer:

Douglas Place, LLC

By: _____
David C. Burk, Manager

City:

City of Wichita, Kansas

By:_____
Carol Brewer, Mayor

STATE OF KANSAS)
) ss:
COUNTY OF SEDGWICK)

The foregoing instrument was acknowledged before me, a notary public in and for the County and State aforesaid, on the _____ day of_____, 2011, by David C. Burk, Manager of Douglas Place, LLC, a Kansas limited liability company, in such entity's capacity as the Manager, on behalf of said limited liability company.

IN WITNESS WHEREOF, I have hereunto set my hand and official seal the day and year last above written.

_____
NOTARY PUBLIC

My Appointment Expires:

_____

STATE OF KANSAS)
) ss:
COUNTY OF SEDGWICK)

BE IT REMEMBERED that on this _____ day of_____, 2011, before me, a notary public in and for said county and state, came Carl Brewer, Mayor of the City of Wichita, Kansas, a municipal corporation of the State of Kansas, who is personally known to me to be the same person who executed, as such officer, the within instrument on behalf of said City, and such person duly acknowledged the execution of the same to be the act and deed of said City.

IN WITNESS WHEREOF, I have hereunto set my hand and affixed my official seal, the day and year last above written.

_____
Notary Public

My Appointment Expires:

_____

EXHIBIT A

Legal Description of Douglas Place Property

Lots 1, 3, and 5 on Douglas Avenue, N.A. English's Addition, City of Wichita, Sedgwick County, Kansas

Comprehensive Financing Feasibility Study for the

Douglas Place Project

within the

Center City South Redevelopment District

City of Wichita, Kansas

Table of Contents

	Page (s)
OVERVIEW…..……	1-2
GENERAL DESCRIPTION OF TAX INCREMENT ……	3
PROJECT DESCRIPTION …….	4
PROJECTED REVENUE (BENEFITS) …….	4-5
PROJECTED EXPENDITURES (COSTS) ……	6
CONCLUSIONS …….	6

Map of the Redevelopment District and Project Area……EXHIBIT I
Assumptions Report ……...EXHIBIT II
Projected Tax Increment Report ……EXHIBIT III
Projected Bond Cash Flow Report …….EXHIBIT IV

Overview

Sections 12-1770 through 12-1780d of the Kansas Statutes ("the Act") provide a means for cities to finance all or a portion of public infrastructure and redevelopment costs with incremental real estate and sales taxes. The purpose of the Act is to "promote, stimulate and develop the general and economic welfare of the State of Kansas and its communities, and to assist in the development and redevelopment of blighted areas and deteriorating areas which are not yet blighted, but may be so in the future, located within cities…".

A city may exercise the powers conferred under the Act provided that the governing body of the city has adopted a resolution finding that the specific area sought to be developed or redeveloped is a blighted area, a conservation area or was designated an enterprise zone prior to July 1, 1992. In addition, the city must find that the conservation, development or redevelopment of such an area is necessary to promote the general and economic welfare of the city.

One or more redevelopment projects may be undertaken within the District. Kansas Statutes require projects to be completed within 20 years from transmittal of the redevelopment project plan pursuant to K.S.A. 12-1776, with the exception of environmental investigation and remediation projects which must be completed within 20 years from the date the City enters into a consent decree with the Kansas Department of Health and Environment or the U.S. Environmental Projection Agency, unless the County and School District have expressly consented to a 10-year extension of the term.

For each redevelopment project undertaken within the District, a redevelopment project plan ("the Project Plan") must be prepared in consultation with the City Planning Commission. The Project Plan must include the following:

1. A summary or copy of the Comprehensive Financial Feasibility Study.

2. A reference to the statutorily required district plan for the District.

3. A description and map of the area to be redeveloped ("the Project").

4. The Relocation Assistance Plan (if applicable).

5. A detailed description of all buildings and facilities proposed to be constructed or improved.

6. Any other information the City deems necessary to advise the general public of the intent of the Project Plan.

The Comprehensive Financial Feasibility Study (this document) must show that the benefits derived from the specified redevelopment project will exceed the costs, and that the income therefrom will be sufficient to pay for the applicable project costs. Benefits are determined to be the aggregate revenues of the redevelopment project including increment income, assessment income, interest income, private party contributions and any other available funding sources. Costs are determined to be the total of eligible project expenditures as defined by K.S.A. 12-1770a, including the payment of principal and interest of debt used to finance the redevelopment project.

Pursuant to all the provisions of the Act, the City of Wichita has, by Ordinance No. 47-475 dated May 8, 2007, found a portion of the City was designated as an enterprise zone prior to July 1, 1992 and that redevelopment of the area is necessary to promote the general and economic welfare of the City. With adoption of Ordinance No. 47-475, the City established and designated such area as the Center City South Redevelopment District ("the District"). On December 9, 2008, by Ordinance No. 48-124, the City expanded the District. The District boundaries are shown in Exhibit I. Ordinance No. 48-124 also amended the statutorily required district plan for the redevelopment of the District, originally approved with Ordinance No. 47-475. The amended district plan limits TIF expenditures in the expanded district to those specified in the district plan.

The City is currently considering the adoption of a Project Plan for the proposed Douglas Place Project within the designated Center City South Redevelopment District ("the Project"). The Project consists of a complete historic renovation of a 14-story building into a 117 room boutique hotel, construction of an approximately 250-300 stall parking garage with ground floor retail and inclusion of an urban park and walkway. Adoption of the Project Plan will allow the City to finance eligible project costs associated with the redevelopment of property located on the block southeast of Douglas and Broadway Avenues (the "Project Area") as depicted in Exhibit I. Specifically, the City will purchase land for the parking garage and urban park, fund up to $6,000,000 for the construction of the garage, and fund up to $800,000 for the urban park and walkway as its contribution to the Project.

The City will provide public funding, including but not limited to, tax increment financing to finance purchase of the land, construction of the garage, development of an urban park and various public improvements. The City will enter into a development agreement with Douglas Place L.L.C. to develop and operate the garage and retail.

General Description of Tax Increment

Property tax increment financing involves the creation of an increment (increase over a base value) in the real estate taxes that are generated from a defined geographic area of a community. Upon establishment of a redevelopment district, the total assessed value of all taxable real estate within the district for that year is determined. This valuation is referred to as the district's "Original Assessed Value." Property taxes attributable to the district's Original Assessed Value are annually collected and distributed by the county treasurer to the appropriate city, county, school district and all other applicable taxing jurisdictions in the same manner as other property taxes.

As new development occurs within the redevelopment district, the total assessed value of the district, in any given year, will normally exceed its Original Assessed Value. Property taxes generated by applying the sum of the property tax rates of all applicable taxing jurisdictions to the incremental increase in assessed value (over and above the Original Assessed Valuation) is referred to as the "property tax increment". All property tax increment is collected by the County and distributed to the City to be deposited in a special tax increment fund.

Sales tax increment financing involves the creation of an increment (increase over a base value) in the local sales taxes that are generated from a defined geographic area of a community. Upon establishment of a redevelopment district, a base value of local sales tax collections within the district is determined. As new commercial development occurs within the redevelopment district, sales tax collections are expected to increase above the base value. Pursuant to city law governing the use of local sales tax revenue, the City does not intend to collect incremental sales tax revenues as "sales tax increment".

Tax increment funds may only be used to pay for certain statutorily-defined eligible project costs, including principal and interest on debt issued, in whole or in part, to finance eligible project costs within the redevelopment district. Such debt includes notes, special obligation bonds, full faith and credit tax increment bonds, and other debt instruments. The City intends to issue its full faith and credit tax increment bonds to finance Douglas Place Project costs that are eligible for tax increment financing, including land acquisition and construction of a public parking structure.

Project Description

The Douglas Place project area consists of three office buildings and parking lots that occupy half the block. Two of the three buildings have been vacant for an extended period of time. Redevelopment will consist of historic renovation of the Douglas Place building into a 117 room boutique hotel and development of an urban park and walkway between the Project building and Henry's building to the south. The parking lot on the southeast corner of the block will be developed into a 250-300 stall public parking structure.

Projected Revenues (Benefits)
Captured Assessed Value

It is the City's intention to use the property tax increment generated by the District to pay the debt service on general obligation bonds issued by the City to finance a portion of its contribution to the Project. The property tax increment is based on the District's increase in assessed value over its Original Assessed Value. The increase in value is expected to be recorded in January in the years 2012- 2015 and is referred to as the Captured Assessed Value.

The Total Assessed Value for the Project Area as of January 1, 2015 is estimated to be $4,583,750. The Original Assessed Value of the Project Area, as assessed in January 2007 for taxes payable in 2007-2008, is $225,445, according to data provided by the City of Wichita Geographic Information Service Office. A portion of the assessed value attributed to appreciation of the property from 2007-2010 ($262,227) has been captured for use in the Arena Phase I project. Therefore, the Captured Assessed Value of the TIF District as of January 1, 2015 is $4,096,078.

For the purpose of this analysis, it is assumed that the Total Assessed Value of the District will increase during the life of the project period at the annual inflation rate of 2%.

Property Tax Rates

In order to determine the amount of tax increment generated by the District in any given year, the Captured Assessed Value of the District must be multiplied by the sum of the tax rates for all *applicable* taxing jurisdictions for that year. For taxes levied in 2010 and payable in 2011, the applicable rate is 98.559 mills as shown below. The State of Kansas rate of 1.5 mills and the statewide education levy of 20 mills are not applicable to TIF and have been omitted from the following total:

Jurisdiction	Mill Rate (2010)
City of Wichita	32.272
Sedgwick County	29.359
USD No. 259	36.928
TIF-Applicable Mill Rate	98.559

Projected Property Tax Increment and Other Project Revenue

The projected property tax increment generated by the District is shown in column 8 of Exhibit III. Such projections are based on captured assessed values derived from captured assessed valuations and tax rates as previously discussed. It is assumed that Project construction will begin in early 2012 and be completed before the end of 2012, with full occupancy by 2014, and therefor achieve full valuation by January 1, 2015. It is estimated that the full property tax increment will be $425,925 starting in 2015

The City and Sedgwick County have committed to an agreement for funding TIF projects in the expanded Center City South area. Under the terms of the District Plan, 70% of tax increment revenue from the expanded area of the Redevelopment District will be used for tax increment financing. The remaining 30% will be redistributed, using the existing mill levy formula, to the City, County and School District. The City intends to reinvest its portion of the 30% redistribution towards payment of the TIF bonds (column 10 of Exhibit III). It is estimated that the 70% portion to be used for tax increment revenue will be $298,147 and the City's reinvested portion will be $41,839 for a total of $339,987.

All tax increment shall be allocated and paid by the Sedgwick County Treasurer to the City Treasurer in the same manner and at the same time as normal property taxes. All such incremental taxes must be deposited in a special fund of the City for the payment of eligible redevelopment costs.

Projected Expenditures (Costs)

A projected budget for the eligible project costs in the Project Area is listed below.

Sources	
Par Amount of TIF Bonds	$ 2,920,000
CIP funding	4,805,000
	$ 7,725,000
Uses	
Land Acquisition	$770,000
Urban Park and Walkway	800,000
Public Parking Garage	6,000,000
Financing and Other Costs	155,000
	$7,725,000

It is anticipated that all eligible project costs will be financed with general obligation (full faith and credit) tax increment financing bonds issued by the City. Exhibit IV illustrates a $2,920,000 taxable general obligation tax increment bond issue sold in 2014.

Conclusions

Kansas Statutes require that the Comprehensive Financial Feasibility Study must demonstrate that the benefits derived from the Project will exceed the costs, and that the income therefrom will be sufficient to pay for all eligible project costs. As previously discussed, Exhibit III illustrates the projections of tax increment through the year 2030. Projected net tax increment revenue is available to pay debt service on full faith and credit tax increment financing bonds issued to finance eligible project costs designated for such financing.

Exhibit IV (Projected Bond Cash Flow Report) illustrates that projected tax increment from the District will be sufficient to pay for all eligible project costs including the projected debt service on general obligation bonds issued to finance such costs. As such, this report demonstrates that the revenues (benefits) of the District and Project Area exceed the expenditures (costs).

EXHIBIT "I"

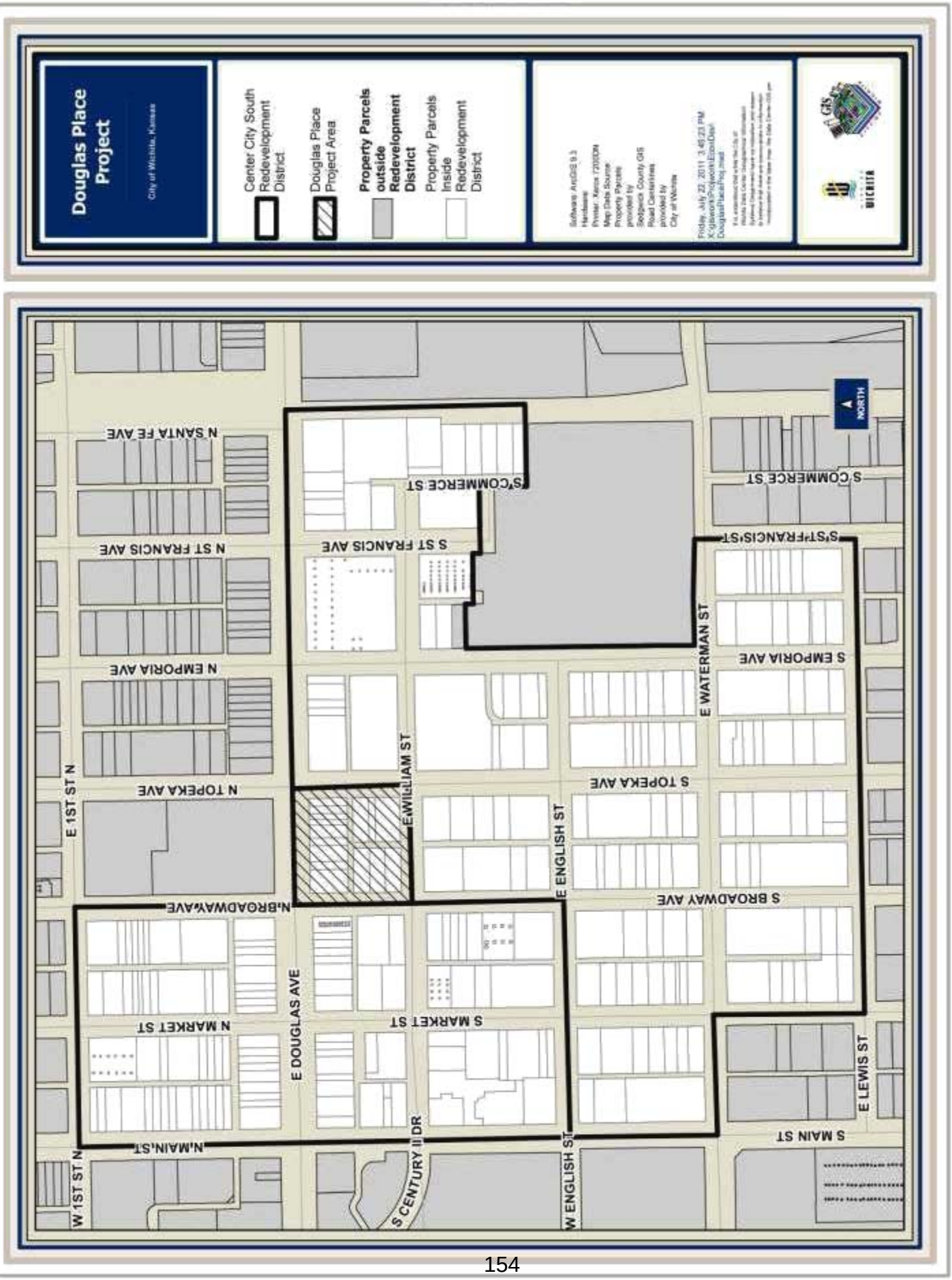
Douglas Place Project
City of Wichita, Kansas
Center City South Redevelopment District
Douglas Place Project Area
Property Parcels outside Redevelopment District
Property Parcels Inside Redevelopment District
Software: ArcGIS 9.3
Hardware:
Printer: Xerox 7200DN
Map Data Source:
Property Parcels provided by Sedgwick County GIS
Road Centerlines provided by City of Wichita
Friday, July 22, 2011 3:45:23 PM
K:\giswork\Projects\ExpoDist\DouglasPlaceProj.mxd
GIS
WICHITA
NORTH
N SANTA FE AVE
N ST FRANCIS AVE
N EMPORIA AVE
N TOPEKA AVE
E 1ST ST N
N BROADWAY AVE
N MARKET ST
W 1ST ST N
N MAIN ST
E DOUGLAS AVE
S COMMERCE ST
S ST FRANCIS AVE
E WILLIAM ST
S MARKET ST
S CENTURY II DR
E ENGLISH ST
W ENGLISH ST
S TOPEKA AVE
S BROADWAY AVE
E WATERMAN ST
S EMPORIA AVE
S MAIN ST
E LEWIS ST

Assumptions Report

City of Wichita, Kansas
Center City South Redevelopment District
Douglas Place Project

Description of Project Area	See Map (Exhibit I)
Original Appraised Value (1/1/07)	$3,126,260
Original Assessed Value (1/1/07)	225,445
2015 Appraised Value (1/1/15)	$25,989,200
2015 Assessed Value (1/1/15)	4,096,078

2010 Mill Rates (2011 Pay)	Total	TIF Applicable
City of Wichita	32.272	32.272
Sedgwick County	29.359	29.359
USD No. 259	56.928	36.928
State of Kansas	1.500	NA
SSMID	5.959	NA
Total	126.018	98.559

Property Value Inflation Rate	2%

Projected Tax Increment Report

City of Wichita, Kansas
Center City South Redevelopment District
Douglas Place Project

Levy & Appraised Year (1)	Year Taxes Distributed (2)	Total Assessed Value (3)	Original Assessed Value (4)	Arena Phase I Value Not Included (5)	Captured Assessed Value (6)	Mill Rate (7)	Tax Increment Collected (a) (8)	70% Allocation to Debt Service (9)	City of Wichita Revenue (10)	TIF Revenue Available for Debt Service (11)
2011	2012	1,145,938	225,445	242,257	903,680	98.559	89,066	62,346	8,749	71,095
2012	2013	1,145,938	225,445	247,102	898,835	98.559	88,588	62,012	8,702	70,714
2013	2014	3,491,750	225,445	252,044	3,239,706	98.559	319,302	223,512	31,366	254,877
2014	2015	3,959,750	225,445	257,085	3,702,665	98.559	364,931	255,452	35,848	291,299
2015	2016	4,583,750	225,445	262,227	4,321,523	98.559	425,925	298,147	41,839	339,987
2016	2017	4,675,425	225,445	267,471	4,407,954	98.559	434,443	304,110	42,676	346,786
2017	2018	4,768,934	225,445	272,821	4,496,113	98.559	443,132	310,193	43,530	353,722
2018	2019	4,864,312	225,445	278,277	4,586,035	98.559	451,995	316,397	44,400	360,797
2019	2020	4,961,598	225,445	283,843	4,677,756	98.559	461,035	322,724	45,288	368,013
2020	2021	5,060,830	225,445	289,520	4,771,311	98.559	470,256	329,179	46,194	375,373
2021	2022	5,162,047	225,445	295,310	4,866,737	98.559	479,661	335,763	47,118	382,880
2022	2023	5,265,288	225,445	301,216	4,964,072	98.559	489,254	342,478	48,060	390,538
2023	2024	5,370,594	225,445	307,241	5,063,353	98.559	499,039	349,327	49,021	398,349
2024	2025	5,478,006	225,445	313,385	5,164,620	98.559	509,020	356,314	50,002	406,316
2025	2026	5,587,566	225,445	319,653	5,267,913	98.559	519,200	363,440	51,002	414,442
2026	2027	5,699,317	225,445	326,046	5,373,271	98.559	529,584	370,709	52,022	422,731
2027	2028	5,813,303	225,445	332,567	5,480,736	98.559	540,176	378,123	53,062	431,185
2028	2029	5,929,569	225,445	339,218	5,590,351	98.559	550,979	385,686	54,124	439,809
2029	2030	6,048,161	225,445	346,003	5,702,158	98.559	561,999	393,399	55,206	448,605

EXHIBIT III

Projected Bond Cash Flow Report

City of Wichita, Kansas
Center City South Redevelopment District
Douglas Place Project

Annual Period Ending (1)	Principal (2)	G.O. Interest Rate (3)	Interest (4)	P&I (5)	Net Tax Increment (7)	Annual Balance (8)	Cumulative Balance (9)
9/1/2012	55,000	6.00%	-	54,689	71,095	16,406	16,406
9/1/2013	55,000	6.00%	-	54,395	70,714	16,319	32,725
9/1/2014	100,000	6.00%	94,556	196,059	254,877	58,818	91,543
9/1/2015	40,000	6.00%	184,743	224,076	291,299	67,223	158,767
9/1/2016	80,000	6.00%	179,450	261,528	339,987	78,459	237,225
9/1/2017	95,000	6.00%	172,903	266,759	346,786	80,027	317,253
9/1/2018	105,000	6.00%	165,823	272,094	353,722	81,628	398,881
9/1/2019	120,000	6.00%	158,169	277,536	360,797	83,261	482,142
9/1/2020	135,000	6.00%	149,894	283,087	368,013	84,926	567,067
9/1/2021	150,000	6.00%	140,946	288,748	375,373	86,625	653,692
9/1/2022	165,000	6.00%	131,272	294,523	382,880	88,357	742,049
9/1/2023	180,000	6.00%	120,812	300,414	390,538	90,124	832,173
9/1/2024	195,000	6.00%	109,503	306,422	398,349	91,927	924,100
9/1/2025	215,000	6.00%	97,276	312,550	406,316	93,766	1,017,866
9/1/2026	235,000	6.00%	84,056	318,802	414,442	95,640	1,113,506
9/1/2027	255,000	6.00%	69,762	325,178	422,731	97,553	1,211,058
9/1/2028	275,000	6.00%	54,308	331,681	431,185	99,504	1,310,563
9/1/2029	300,000	6.00%	37,599	338,315	439,809	101,494	1,412,057
9/1/2030	325,000	6.00%	19,533	345,081	448,605	103,524	1,515,581
	3,080,000		1,970,605	5,051,937	6,567,518	1,515,581	

District Plan

EXHIBIT "C"

DISTRICT PLAN FOR THE REDEVELOPMENT OF THE CENTER CITY SOUTH REDEVELOPMENT DISTRICT THROUGH TAX INCREMENT FINANCING

October 23, 2008

SECTION 1: PURPOSE

A district plan is required for inclusion in the establishment or expansion of a redevelopment district under K.S.A. 12-1771(a). The district plan is a preliminary plan that identifies proposed redevelopment project areas within the district, and describes in a general manner the buildings and facilities to be constructed, reconstructed or improved.

SECTION 2: DESCRIPTION OF TAX INCREMENT FINANCING

Projects financed through tax increment financing typically involve the creation of an "increment" in real estate property tax revenue. The increment is generated by segregating the assessed values of real property located within a defined geographic area such that a portion of the resulting property taxes are paid to the City to fund one or more redevelopment projects in the redevelopment district, and the remaining portion is paid to all taxing jurisdictions. The portion of property taxes paid to the City in this way is determined by the increase in assessed value of the properties within the redevelopment district as a result of the new development occurring within the area. When the aggregate property tax rates of all taxing jurisdictions are applied to this increase in assessed property value, tax increment revenue is generated. Certain improvements within the district may be funded by the City and repaid over a specified period of time with this incremental revenue. The property taxes attributable to the assessed value existing prior to redevelopment, the "original valuation," are distributed to all taxing jurisdictions just as they were prior to redevelopment.

SECTION 3: BUILDINGS AND FACILITIES

The proposed redevelopment district is within the city limits of Wichita, Kansas. The district is generally bounded on the east by the Central Rail Corridor, Emporia Avenue and St. Francis Street, on the south by Lewis and Waterman Streets, on the west by Market and Main Streets, and on the north by Douglas Avenue and 1st Street North. Property owned by Sedgwick County and used for the Intrust Bank Arena is excluded from the redevelopment district.

The area included in the proposed district qualifies as a conservation area under state law governing the use of tax increment financing. A majority of the buildings in the area are more than 50 years old, many of which were built before 1930. Except for the Douglas Avenue corridor, most of the proposed redevelopment district is less densely developed than the northern part of Downtown Wichita, with more low-rise office, retail and warehouse structures and open parking lots. Over the years, many of the higher-density buildings in the area have been removed, leading to a pattern of under-utilization of property. Many of the surviving older buildings are showing signs of delapidation and need of rehabilitation.

SECTION 4: REDEVELOPMENT

The proposed district is located in an important redevelopment area within the City of Wichita, surrounding the site of the new Sedgwick County Arena, which is located between Emporia Avenue and the railroad tracks, between William and Waterman Streets. The redevelopment of this area has been the object of a major land-use and redevelopment planning project, called the Arena Neighborhood Redevelopment Plan. The Plan identifies and recommends a variety of land uses and infrastructure improvements to influence and guide the redevelopment of the area that is expected as a result of the construction of the arena. The establishment of the proposed redevelopment district will provide an appropriate source of funding to assist the City in providing infrastructure improvements and partnering with private developers in bringing new developments to the area.

The Arena Neighborhood Redevelopment Plan has conceptually divided the redevelopment district into four major redevelopment project areas, each with a distinct redevelopment goal. The ***Douglas Avenue Corridor District***

project area is located generally in the norther portion of the redevelopment district along Douglas Avenue and for which the redevelopment goal is to be a high intensity business corridor, primarily office and support commercial uses with upper level residential opportunities. The goal of the ***English/William Street District*** project area which is located generally in the center portion of the redevelopment district along English Street and William Street is to be a walkable urban mixed-use district of primarily commercial and office uses as well as public and residential uses. The ***Broadway Neighborhood District*** project area which is located generally in the southern portion of the redevelopment district and includes the area from Waterman to Kellogg and from Main to Emporia. Its goal is to redevelop as an urban residential environment with support commercial opportunities serving residents and Kellogg users. The ***Commerce Street Arts District*** project area which is located generally in the eastern portion of the redevelopment district and is to be a unique experiential arts area with live / work studio opportunities.

It is anticipated that there will be a number of individual redevelopment projects undertaken within the proposed redevelopment district, which will qualify for assistance from tax increment financing. Several are currently in various stages of preparation at this time. Projects will include mixed-use developments, residential, office, retail, entertainment, hotels and other uses. They will include demolition and new construction as well as rehabilitation of existing buildings.

SECTION 5: USE OF TAX INCREMENT FINANCING

Tax increment financing may generally be used for property acquisition, site preparation, utilities, drainage, street improvements, streetscape amenities, public outdoor spaces, landscaping and parking facilities in the redevelopment district; provided, however, that within the expansion area being added to the original Center City South Redevelopment District, which was established on May 8, 2007, by Ordinance No. 47-475, it is the expressed intent of the City of Wichita to limit the use of tax increment financing within the expansion area of the Center City South Redevelopment District to finance the costs of constructing, reconstructing and improving the following street segments, intersections, streetscape improvements, landscaping, lighting and signage projects, including the costs of design, engineering, surveying and inspection:

Market Street, Lewis Street to Douglas Avenue
Topeka Avenue, Lewis Street to Douglas Avenue
Emporia Avenue, Lewis Street to Douglas Avenue
St. Francis Avenue, William Street to Douglas Avenue
St. Francis Avenue, Lewis Street to Waterman Street
William Street, Main Street to Commerce Street
English Street, Main Street to Emporia Avenue
Lewis Street, Market Street to St. Francis Avenue
Wayfinding Improvements including Streetscape Design Manual

In addition to limiting the use of tax increment financing to the above specified improvement projects, the City will stipulate in the project plans for any redevelopment project located within the expansion area that an amount equal to seventy percent (70%) of the tax increment realized from taxpayers in the expansion area shall be allocated by the County Treasurer to the City to finance authorized project costs and the remainder shall be allocated and paid to taxing districts in the same manner as other ad valorem taxes. The limits described in this section shall not apply to redevelopment projects located in the original Center City South Redevelopment District.

SECTION 6: PROJECT PLANS

Per statute, any proposed redevelopment projects will be presented to the Governing Body in segments through the adoption of separate redevelopment Project Plans. Each Project Plan will identify specific project areas located within the established redevelopment district and will include detailed descriptions of the projects as well as a financial feasibility study that shows the economic benefits out-weigh the costs. Project Plans must be reviewed by the Metropolitan Area Planning Commission and submitted to a public hearing following proper notification of property owners and occupants, before they can be adopted by a two-thirds majority vote of the Governing Body. Only then can tax increment income be spent on redevelopment projects.

Map and Legal Description of Property to be Redeveloped

EXHIBIT B

Legal Description of the Douglas Place Redevelopment District

All property located in Wichita, Sedgwick County, Kansas within the boundaries beginning at the intersection of the centerline of Broadway Avenue and the north right of way line of Douglas Avenue; thence east to the east right of way line of Topeka Avenue; thence south to the south right of way line of William Street; thence west to the west of way line of Broadway Avenue; thence north to the point of beginning; and including all street rights of way within such described area.

EXHIBIT "I"

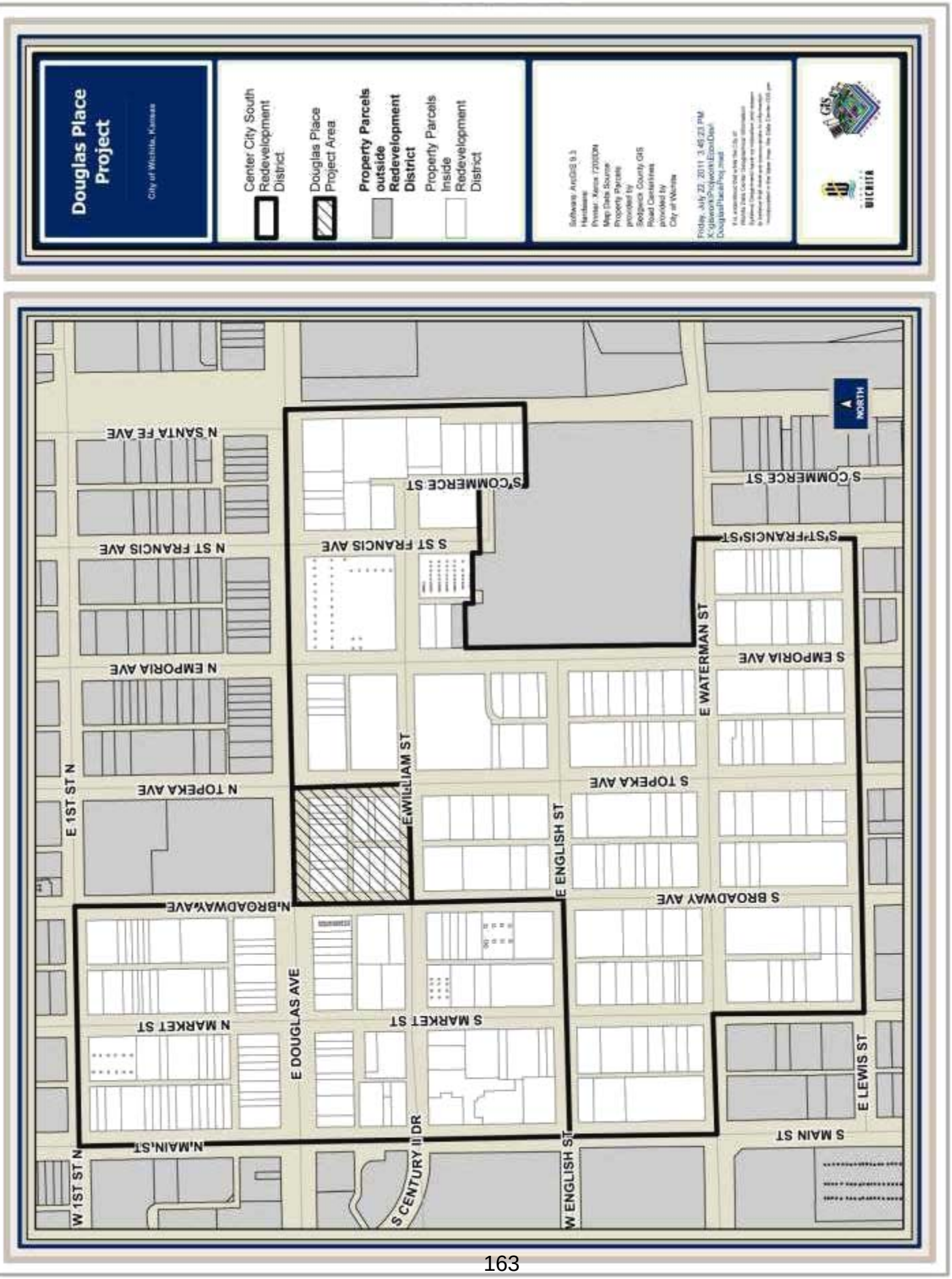
Douglas Place Project
City of Wichita, Kansas
Center City South Redevelopment District
Douglas Place Project Area
Property Parcels outside Redevelopment District
Property Parcels Inside Redevelopment District
Software: ArcGIS 9.3
Hardware:
Printer: Xerox 7200DN
Map Data Source:
Property Parcels provided by Sedgwick County GIS
Road Centerlines provided by City of Wichita
Friday, July 22, 2011 3:45:23 PM
X:\gisworks\Projworks\EconDev\DouglasPlaceProj.mxd
WICHITA
NORTH
N SANTA FE AVE
N ST FRANCIS AVE
N EMPORIA AVE
N TOPEKA AVE
N BROADWAY AVE
N MARKET ST
N MAIN ST
S COMMERCE ST
S ST FRANCIS AVE
S ST FRANCIS ST
S EMPORIA AVE
S TOPEKA AVE
S BROADWAY AVE
S MARKET ST
S MAIN ST
E 1ST ST N
W 1ST ST N
E WILLIAM ST
E ENGLISH ST
W ENGLISH ST
E WATERMAN ST
E DOUGLAS AVE
S CENTURY II DR
E LEWIS ST

Relocation Assistance Plan

RELOCATION ASSISTANCE PLAN

(KSA 12-1777)

Assistance for the relocation of persons, families or businesses from property acquired in conjunction with the Douglas Place Project is not required. No persons or families will be displaced as a result of the Project and no tenants will be relocated other than within the Douglas Place Project boundaries.

Description of Proposed Douglas Place Project

Center City South Redevelopment District

DESCRIPTION OF PROPOSED DOUGLAS PLACE PROJECT

In 2008 the City of Wichita began an effort to revitalize downtown and make it "Everybody's Neighborhood". The culmination of this effort is Project Downtown, a master plan adopted by the City Council and MAPC in 2010 and by Sedgwick County in 2011. The Plan identifies unique districts within downtown with development goals specific to each district's elements and location. The Douglas Place Project is within the Douglas Core Area with a focus on increased walk ability, retail and uses that benefit from nearby amenities, including hotels. The Plan further identifies William Street as a target walking street and the block south of the Douglas Place Project at Broadway and William as a Catalyst Site.

The Douglas Place Project addresses many of the goals for the Douglas Core Area. The Ambassador Hotel provides Historic renovation of a prime building and adds 117 hotel rooms to downtown. William Street is benefitted by a 250-300 stall parking garage, including enhanced walk ability with the urban park and retail space on the first floor of the garage. The garage further enhances the area by providing parking for the block and for the catalyst site of the old Allis Hotel on Broadway and William.

The Project consists of a complete historic renovation of the 14-story Douglas Place building into a 117 room boutique hotel. The building is located within the Douglas Core area on the corner of Douglas and Broadway. Renovation of the building will include a lobby and restaurant/bar on the 1st floor and large banquet facilities on the 2nd floor.

The southeast corner of the block is currently a paved parking. A 250-300 stall parking garage will be constructed on the corner. The first floor will include 8,400 square feet of retail space to support the walk ability of William Street.

The alleys on the block will be reworked to make them more compatible with pedestrians and vehicles as well as adding to the mid-block east/west circulation patterns identified in Project Downtown. An urban park will be developed between the Ambassador Hotel and the old Henry's building.

The Project Area also includes the long vacant former Henry's building. Redevelopment is under consideration and the value of future development of that building has been factored in to the tax increment estimates.

USE OF TAX INCREMENT FINANCING

The City of Wichita has undertaken the legal steps necessary to establish a redevelopment district pursuant to state laws (K.S.A. 12-1770 *et seq*.) in order to use

tax increment financing ("TIF") to fund a portion of the acquisition and development of a parking structure subject to a development agreement with Douglas Place, LLC. Upon adoption of this project plan, the City will have established its authority under state law to issue general obligation bonds to finance the TIF-funded improvements, which bonds will be repaid from the incremental increase in property taxes resulting from the redevelopment of the Project Area. The project costs consist of the following:

- **Property Acquisition** – The City will use Tax Increment Financing in the amount of $770,000 to acquire land for the parking garage.
- **Public Improvements** – The City will fund the costs of public improvements including a walkway up to $800,000.
- **Public Parking Garage** – The City will fund the costs of a 250-300 stall parking garage up to $6,000,000.
- **Total Project Costs** -- $7,570,000.
    - **TIF Funded Project Costs** -- $2,920,000
    - **Other City Funding** -- $4,650,000

Metropolitan Area Planning Commission Resolution

RESOLUTION

A RESOLUTION OF THE WICHITA-SEDGWICK COUNTY METROPOLITAN AREA PLANNING COMMISSION FINDING THAT THE CITY OF WICHITA, KANSAS REDEVELOPMENT PROJECT KNOWN AS THE DOUGLAS PLACE PROJECT IS CONSISTENT WITH THE COMPREHENSIVE GENERAL PLAN FOR THE DEVELOPMENT OF THE CITY OF WICHITA, KANSAS.

WHEREAS, the City, by Resolution No. 07-167 passed March 13, 2007, adopted a redevelopment district plan which identifies proposed redevelopment project areas and proposed buildings and facilities to be constructed or improved; and

WHEREAS, by Ordinance No. 47-475 adopted May 8, 2007, and published May 11, 2007, the City of Wichita established a redevelopment district pursuant to K.S.A. 12-1770 et. seq., as amended, known as the Center City South Redevelopment District; and

WHEREAS, by Ordinance No. 48-124 adopted December 9, 2008, and published December 12, 2008, the City of Wichita expanded the Center City South Redevelopment District pursuant to K.S.A. 12-1770 et. seq., as amended and, adopted an amended redevelopment district plan which identifies proposed and specific redevelopment project areas and improvements; and

WHEREAS, the City of Wichita proposes to undertake a Redevelopment Project within the Center City South Redevelopment District, consisting of land acquisition and construction of a public parking garage as set out in the Douglas Place Redevelopment Project Plan; and

WHEREAS, the City has prepared a Redevelopment Project Plan for said Project in accordance with K.S.A. 12-1772 and is considering the adoption of the Plan; and

WHEREAS, a relocation assistance plan under K.S.A. 12-1777 is included in the Redevelopment Project Plan; and

WHEREAS, K.S.A. 12-1772 provides that any City proposing to undertake a redevelopment project within a redevelopment district shall prepare a redevelopment project plan in consultation with the planning commission of the City; and

WHEREAS, the City's proposed redevelopment project plan has been presented to and reviewed by the Wichita-Sedgwick County Metropolitan Area Planning Commission;

NOW, THEREFORE, BE IT RESOLVED BY THE WICHITA-SEDGWICK COUNTY METROPOLITAN AREA PLANNING COMMISSION:

SECTION 1. It is hereby, after due consideration, found that the Douglas Place Redevelopment Project Plan for the Center City South Redevelopment District is consistent with the comprehensive general plan for the development of the City of Wichita, Kansas.

PASSED AND APPROVED by the Wichita-Sedgwick County Metropolitan Area Planning Commission, this 4th day of August, 2011.

(Seal)

Delna Mills Stevens
CHAIRMAN OF THE WICHITA-SEDGWICK COUNTY METROPOLITAN AREA PLANNING COMMISSION

ATTEST:

John L. Schlegel
Secretary, Wichita-Sedgwick County Metropolitan Area Planning Commission

APPROVED AS TO FORM:

Gary E. Rebenstorf, City Attorney

Comprehensive Financing Feasibility Study for the

Douglas Place Project

within the

Center City South Redevelopment District

City of Wichita, Kansas

Table of Contents

	Page (s)
OVERVIEW…..……	1-2
GENERAL DESCRIPTION OF TAX INCREMENT ……	3
PROJECT DESCRIPTION …….	4
PROJECTED REVENUE (BENEFITS) …….	4-5
PROJECTED EXPENDITURES (COSTS) ……	6
CONCLUSIONS …….	6

Map of the Redevelopment District and Project Area……EXHIBIT I
Assumptions Report ……...EXHIBIT II
Projected Tax Increment Report ……EXHIBIT III
Projected Bond Cash Flow Report …….EXHIBIT IV

Overview

Sections 12-1770 through 12-1780d of the Kansas Statutes ("the Act") provide a means for cities to finance all or a portion of public infrastructure and redevelopment costs with incremental real estate and sales taxes. The purpose of the Act is to "promote, stimulate and develop the general and economic welfare of the State of Kansas and its communities, and to assist in the development and redevelopment of blighted areas and deteriorating areas which are not yet blighted, but may be so in the future, located within cities…".

A city may exercise the powers conferred under the Act provided that the governing body of the city has adopted a resolution finding that the specific area sought to be developed or redeveloped is a blighted area, a conservation area or was designated an enterprise zone prior to July 1, 1992. In addition, the city must find that the conservation, development or redevelopment of such an area is necessary to promote the general and economic welfare of the city.

One or more redevelopment projects may be undertaken within the District. Kansas Statutes require projects to be completed within 20 years from transmittal of the redevelopment project plan pursuant to K.S.A. 12-1776, with the exception of environmental investigation and remediation projects which must be completed within 20 years from the date the City enters into a consent decree with the Kansas Department of Health and Environment or the U.S. Environmental Projection Agency, unless the County and School District have expressly consented to a 10-year extension of the term.

For each redevelopment project undertaken within the District, a redevelopment project plan ("the Project Plan") must be prepared in consultation with the City Planning Commission. The Project Plan must include the following:

1. A summary or copy of the Comprehensive Financial Feasibility Study.

2. A reference to the statutorily required district plan for the District.

3. A description and map of the area to be redeveloped ("the Project").

4. The Relocation Assistance Plan (if applicable).

5. A detailed description of all buildings and facilities proposed to be constructed or improved.

6. Any other information the City deems necessary to advise the general public of the intent of the Project Plan.

The Comprehensive Financial Feasibility Study (this document) must show that the benefits derived from the specified redevelopment project will exceed the costs, and that the income therefrom will be sufficient to pay for the applicable project costs. Benefits are determined to be the aggregate revenues of the redevelopment project including increment income, assessment income, interest income, private party contributions and any other available funding sources. Costs are determined to be the total of eligible project expenditures as defined by K.S.A. 12-1770a, including the payment of principal and interest of debt used to finance the redevelopment project.

Pursuant to all the provisions of the Act, the City of Wichita has, by Ordinance No. 47-475 dated May 8, 2007, found a portion of the City was designated as an enterprise zone prior to July 1, 1992 and that redevelopment of the area is necessary to promote the general and economic welfare of the City. With adoption of Ordinance No. 47-475, the City established and designated such area as the Center City South Redevelopment District ("the District"). On December 9, 2008, by Ordinance No. 48-124, the City expanded the District. The District boundaries are shown in Exhibit I. Ordinance No. 48-124 also amended the statutorily required district plan for the redevelopment of the District, originally approved with Ordinance No. 47-475. The amended district plan limits TIF expenditures in the expanded district to those specified in the district plan.

The City is currently considering the adoption of a Project Plan for the proposed Douglas Place Project within the designated Center City South Redevelopment District ("the Project"). The Project consists of a complete historic renovation of a 14-story building into a 117 room boutique hotel, construction of an approximately 250-300 stall parking garage with ground floor retail and inclusion of an urban park and walkway. Adoption of the Project Plan will allow the City to finance eligible project costs associated with the redevelopment of property located on the block southeast of Douglas and Broadway Avenues (the "Project Area") as depicted in Exhibit I. Specifically, the City will purchase land for the parking garage and urban park, fund up to $6,000,000 for the construction of the garage, and fund up to $800,000 for the urban park and walkway as its contribution to the Project.

The City will provide public funding, including but not limited to, tax increment financing to finance purchase of the land, construction of the garage, development of an urban park and various public improvements. The City will enter into a development agreement with Douglas Place L.L.C. to develop and operate the garage and retail.

General Description of Tax Increment

Property tax increment financing involves the creation of an increment (increase over a base value) in the real estate taxes that are generated from a defined geographic area of a community. Upon establishment of a redevelopment district, the total assessed value of all taxable real estate within the district for that year is determined. This valuation is referred to as the district's "Original Assessed Value." Property taxes attributable to the district's Original Assessed Value are annually collected and distributed by the county treasurer to the appropriate city, county, school district and all other applicable taxing jurisdictions in the same manner as other property taxes.

As new development occurs within the redevelopment district, the total assessed value of the district, in any given year, will normally exceed its Original Assessed Value. Property taxes generated by applying the sum of the property tax rates of all applicable taxing jurisdictions to the incremental increase in assessed value (over and above the Original Assessed Valuation) is referred to as the "property tax increment". All property tax increment is collected by the County and distributed to the City to be deposited in a special tax increment fund.

Sales tax increment financing involves the creation of an increment (increase over a base value) in the local sales taxes that are generated from a defined geographic area of a community. Upon establishment of a redevelopment district, a base value of local sales tax collections within the district is determined. As new commercial development occurs within the redevelopment district, sales tax collections are expected to increase above the base value. Pursuant to city law governing the use of local sales tax revenue, the City does not intend to collect incremental sales tax revenues as "sales tax increment".

Tax increment funds may only be used to pay for certain statutorily-defined eligible project costs, including principal and interest on debt issued, in whole or in part, to finance eligible project costs within the redevelopment district. Such debt includes notes, special obligation bonds, full faith and credit tax increment bonds, and other debt instruments. The City intends to issue its full faith and credit tax increment bonds to finance Douglas Place Project costs that are eligible for tax increment financing, including land acquisition and construction of a public parking structure.

Project Description

The Douglas Place project area consists of three office buildings and parking lots that occupy half the block. Two of the three buildings have been vacant for an extended period of time. Redevelopment will consist of historic renovation of the Douglas Place building into a 117 room boutique hotel and development of an urban park and walkway between the Project building and Henry's building to the south. The parking lot on the southeast corner of the block will be developed into a 250-300 stall public parking structure.

Projected Revenues (Benefits)
Captured Assessed Value

It is the City's intention to use the property tax increment generated by the District to pay the debt service on general obligation bonds issued by the City to finance a portion of its contribution to the Project. The property tax increment is based on the District's increase in assessed value over its Original Assessed Value. The increase in value is expected to be recorded in January in the years 2012- 2015 and is referred to as the Captured Assessed Value.

The Total Assessed Value for the Project Area as of January 1, 2015 is estimated to be $4,583,750. The Original Assessed Value of the Project Area, as assessed in January 2007 for taxes payable in 2007-2008, is $225,445, according to data provided by the City of Wichita Geographic Information Service Office. A portion of the assessed value attributed to appreciation of the property from 2007-2010 ($262,227) has been captured for use in the Arena Phase I project. Therefore, the Captured Assessed Value of the TIF District as of January 1, 2015 is $4,096,078.

For the purpose of this analysis, it is assumed that the Total Assessed Value of the District will increase during the life of the project period at the annual inflation rate of 2%.

Property Tax Rates

In order to determine the amount of tax increment generated by the District in any given year, the Captured Assessed Value of the District must be multiplied by the sum of the tax rates for all *applicable* taxing jurisdictions for that year. For taxes levied in 2010 and payable in 2011, the applicable rate is 98.559 mills as shown below. The State of Kansas rate of 1.5 mills and the statewide education levy of 20 mills are not applicable to TIF and have been omitted from the following total:

Jurisdiction	Mill Rate (2010)
City of Wichita	32.272
Sedgwick County	29.359
USD No. 259	36.928
TIF-Applicable Mill Rate	98.559

Projected Property Tax Increment and Other Project Revenue

The projected property tax increment generated by the District is shown in column 8 of Exhibit III. Such projections are based on captured assessed values derived from captured assessed valuations and tax rates as previously discussed. It is assumed that Project construction will begin in early 2012 and be completed before the end of 2012, with full occupancy by 2014, and therefor achieve full valuation by January 1, 2015. It is estimated that the full property tax increment will be $425,925 starting in 2015

The City and Sedgwick County have committed to an agreement for funding TIF projects in the expanded Center City South area. Under the terms of the District Plan, 70% of tax increment revenue from the expanded area of the Redevelopment District will be used for tax increment financing. The remaining 30% will be redistributed, using the existing mill levy formula, to the City, County and School District. The City intends to reinvest its portion of the 30% redistribution towards payment of the TIF bonds (column 10 of Exhibit III). It is estimated that the 70% portion to be used for tax increment revenue will be $298,147 and the City's reinvested portion will be $41,839 for a total of $339,987.

All tax increment shall be allocated and paid by the Sedgwick County Treasurer to the City Treasurer in the same manner and at the same time as normal property taxes. All such incremental taxes must be deposited in a special fund of the City for the payment of eligible redevelopment costs.

Projected Expenditures (Costs)

A projected budget for the eligible project costs in the Project Area is listed below.

Sources	
Par Amount of TIF Bonds	$ 2,920,000
CIP funding	4,805,000
	$ 7,725,000
Uses	
Land Acquisition	$770,000
Urban Park and Walkway	800,000
Public Parking Garage	6,000,000
Financing and Other Costs	155,000
	$7,725,000

It is anticipated that all eligible project costs will be financed with general obligation (full faith and credit) tax increment financing bonds issued by the City. Exhibit IV illustrates a $2,920,000 taxable general obligation tax increment bond issue sold in 2014.

Conclusions

Kansas Statutes require that the Comprehensive Financial Feasibility Study must demonstrate that the benefits derived from the Project will exceed the costs, and that the income therefrom will be sufficient to pay for all eligible project costs. As previously discussed, Exhibit III illustrates the projections of tax increment through the year 2030. Projected net tax increment revenue is available to pay debt service on full faith and credit tax increment financing bonds issued to finance eligible project costs designated for such financing.

Exhibit IV (Projected Bond Cash Flow Report) illustrates that projected tax increment from the District will be sufficient to pay for all eligible project costs including the projected debt service on general obligation bonds issued to finance such costs. As such, this report demonstrates that the revenues (benefits) of the District and Project Area exceed the expenditures (costs).

EXHIBIT "I"

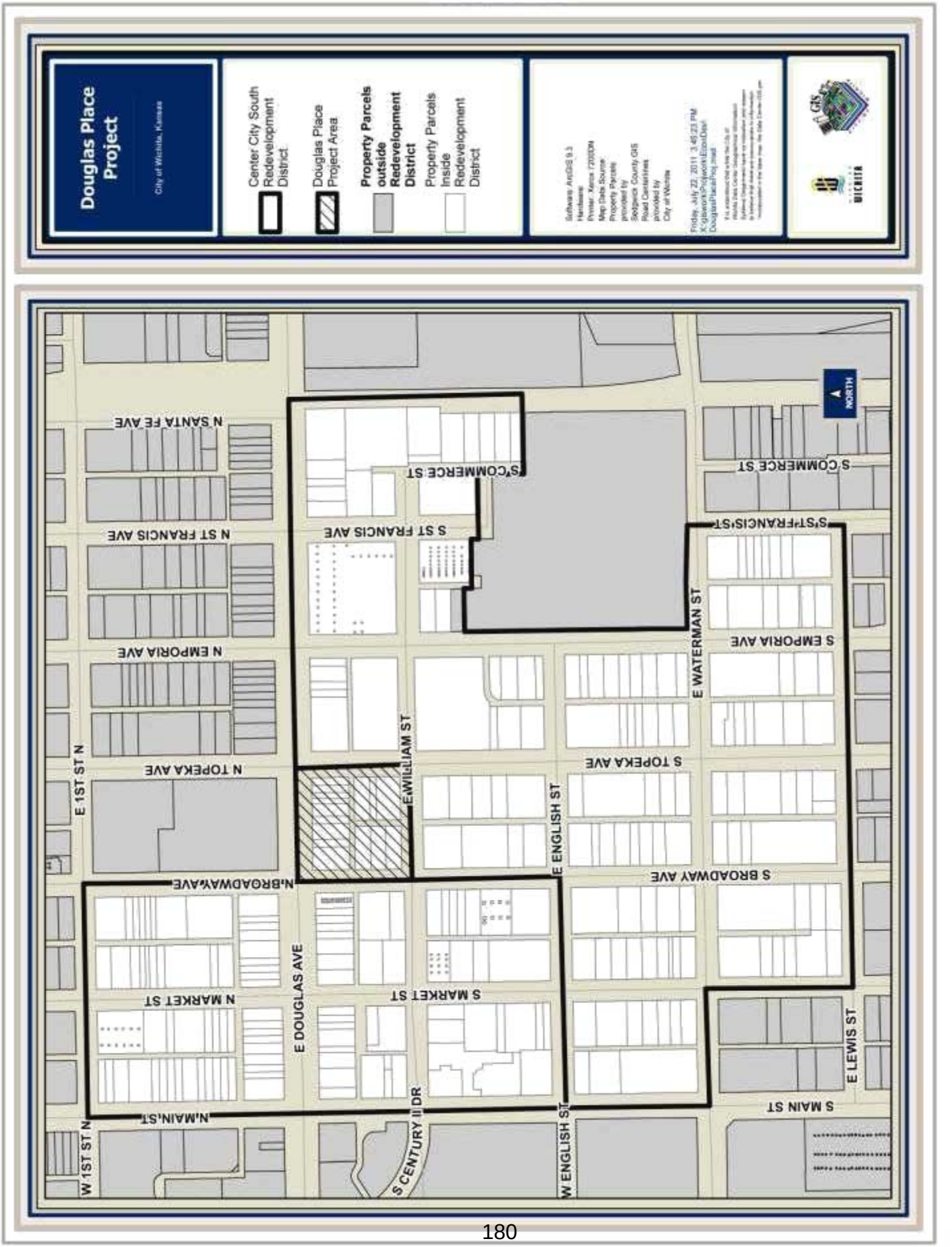
Douglas Place Project
City of Wichita, Kansas
Center City South Redevelopment District
Douglas Place Project Area
Property Parcels outside Redevelopment District
Property Parcels Inside Redevelopment District
Software: ArcGIS 9.3
Hardware:
Printer: Xerox 7200DN
Map Data Source:
Property Parcels provided by Sedgwick County GIS
Road Centerlines provided by City of Wichita
Friday, July 22, 2011 3:45:23 PM
K:\giswork\Projects\ExpoDist\DouglasPlaceProj.mxd
GIS
WICHITA
NORTH
N SANTA FE AVE
N ST FRANCIS AVE
N EMPORIA AVE
N TOPEKA AVE
E 1ST ST N
W 1ST ST N
N BROADWAY AVE
N MAIN ST
N MARKET ST
E DOUGLAS AVE
S COMMERCE ST
S ST FRANCIS AVE
E WILLIAM ST
S MARKET ST
S CENTURY II DR
E ENGLISH ST
W ENGLISH ST
S TOPEKA AVE
S BROADWAY AVE
S MAIN ST
E WATERMAN ST
S EMPORIA AVE
E LEWIS ST

Assumptions Report

City of Wichita, Kansas
Center City South Redevelopment District
Douglas Place Project

Description of Project Area	See Map (Exhibit I)
Original Appraised Value (1/1/07)	$3,126,260
Original Assessed Value (1/1/07)	225,445
2015 Appraised Value (1/1/15)	$25,989,200
2015 Assessed Value (1/1/15)	4,096,078

2010 Mill Rates (2011 Pay)	Total	TIF Applicable
City of Wichita	32.272	32.272
Sedgwick County	29.359	29.359
USD No. 259	56.928	36.928
State of Kansas	1.500	NA
SSMID	5.959	NA
Total	126.018	98.559

Property Value Inflation Rate	2%

Projected Tax Increment Report

City of Wichita, Kansas
Center City South Redevelopment District
Douglas Place Project

Levy & Appraised Year (1)	Year Taxes Distributed (2)	Total Assessed Value (3)	Original Assessed Value (4)	Arena Phase I Value Not Included (5)	Captured Assessed Value (6)	Mill Rate (7)	Tax Increment Collected (a) (8)	70% Allocation to Debt Service (9)	City of Wichita Revenue (10)	TIF Revenue Available for Debt Service (11)
2011	2012	1,145,938	225,445	242,257	903,680	98.559	89,066	62,346	8,749	71,095
2012	2013	1,145,938	225,445	247,102	898,835	98.559	88,588	62,012	8,702	70,714
2013	2014	3,491,750	225,445	252,044	3,239,706	98.559	319,302	223,512	31,366	254,877
2014	2015	3,959,750	225,445	257,085	3,702,665	98.559	364,931	255,452	35,848	291,299
2015	2016	4,583,750	225,445	262,227	4,321,523	98.559	425,925	298,147	41,839	339,987
2016	2017	4,675,425	225,445	267,471	4,407,954	98.559	434,443	304,110	42,676	346,786
2017	2018	4,768,934	225,445	272,821	4,496,113	98.559	443,132	310,193	43,530	353,722
2018	2019	4,864,312	225,445	278,277	4,586,035	98.559	451,995	316,397	44,400	360,797
2019	2020	4,961,598	225,445	283,843	4,677,756	98.559	461,035	322,724	45,288	368,013
2020	2021	5,060,830	225,445	289,520	4,771,311	98.559	470,256	329,179	46,194	375,373
2021	2022	5,162,047	225,445	295,310	4,866,737	98.559	479,661	335,763	47,118	382,880
2022	2023	5,265,288	225,445	301,216	4,964,072	98.559	489,254	342,478	48,060	390,538
2023	2024	5,370,594	225,445	307,241	5,063,353	98.559	499,039	349,327	49,021	398,349
2024	2025	5,478,006	225,445	313,385	5,164,620	98.559	509,020	356,314	50,002	406,316
2025	2026	5,587,566	225,445	319,653	5,267,913	98.559	519,200	363,440	51,002	414,442
2026	2027	5,699,317	225,445	326,046	5,373,271	98.559	529,584	370,709	52,022	422,731
2027	2028	5,813,303	225,445	332,567	5,480,736	98.559	540,176	378,123	53,062	431,185
2028	2029	5,929,569	225,445	339,218	5,590,351	98.559	550,979	385,686	54,124	439,809
2029	2030	6,048,161	225,445	346,003	5,702,158	98.559	561,999	393,399	55,206	448,605

EXHIBIT III

Projected Bond Cash Flow Report

City of Wichita, Kansas
Center City South Redevelopment District
Douglas Place Project

Annual Period Ending (1)	Principal (2)	G.O. Interest Rate (3)	Interest (4)	P&I (5)	Net Tax Increment (7)	Annual Balance (8)	Cumulative Balance (9)
9/1/2012	55,000	6.00%	-	54,689	71,095	16,406	16,406
9/1/2013	55,000	6.00%	-	54,395	70,714	16,319	32,725
9/1/2014	100,000	6.00%	94,556	196,059	254,877	58,818	91,543
9/1/2015	40,000	6.00%	184,743	224,076	291,299	67,223	158,767
9/1/2016	80,000	6.00%	179,450	261,528	339,987	78,459	237,225
9/1/2017	95,000	6.00%	172,903	266,759	346,786	80,027	317,253
9/1/2018	105,000	6.00%	165,823	272,094	353,722	81,628	398,881
9/1/2019	120,000	6.00%	158,169	277,536	360,797	83,261	482,142
9/1/2020	135,000	6.00%	149,894	283,087	368,013	84,926	567,067
9/1/2021	150,000	6.00%	140,946	288,748	375,373	86,625	653,692
9/1/2022	165,000	6.00%	131,272	294,523	382,880	88,357	742,049
9/1/2023	180,000	6.00%	120,812	300,414	390,538	90,124	832,173
9/1/2024	195,000	6.00%	109,503	306,422	398,349	91,927	924,100
9/1/2025	215,000	6.00%	97,276	312,550	406,316	93,766	1,017,866
9/1/2026	235,000	6.00%	84,056	318,802	414,442	95,640	1,113,506
9/1/2027	255,000	6.00%	69,762	325,178	422,731	97,553	1,211,058
9/1/2028	275,000	6.00%	54,308	331,681	431,185	99,504	1,310,563
9/1/2029	300,000	6.00%	37,599	338,315	439,809	101,494	1,412,057
9/1/2030	325,000	6.00%	19,533	345,081	448,605	103,524	1,515,581
	3,080,000		1,970,605	5,051,937	6,567,518	1,515,581	

District Plan

EXHIBIT "C"

DISTRICT PLAN FOR THE REDEVELOPMENT OF THE CENTER CITY SOUTH REDEVELOPMENT DISTRICT THROUGH TAX INCREMENT FINANCING

October 23, 2008

SECTION 1: PURPOSE

A district plan is required for inclusion in the establishment or expansion of a redevelopment district under K.S.A. 12-1771(a). The district plan is a preliminary plan that identifies proposed redevelopment project areas within the district, and describes in a general manner the buildings and facilities to be constructed, reconstructed or improved.

SECTION 2: DESCRIPTION OF TAX INCREMENT FINANCING

Projects financed through tax increment financing typically involve the creation of an "increment" in real estate property tax revenue. The increment is generated by segregating the assessed values of real property located within a defined geographic area such that a portion of the resulting property taxes are paid to the City to fund one or more redevelopment projects in the redevelopment district, and the remaining portion is paid to all taxing jurisdictions. The portion of property taxes paid to the City in this way is determined by the increase in assessed value of the properties within the redevelopment district as a result of the new development occurring within the area. When the aggregate property tax rates of all taxing jurisdictions are applied to this increase in assessed property value, tax increment revenue is generated. Certain improvements within the district may be funded by the City and repaid over a specified period of time with this incremental revenue. The property taxes attributable to the assessed value existing prior to redevelopment, the "original valuation," are distributed to all taxing jurisdictions just as they were prior to redevelopment.

SECTION 3: BUILDINGS AND FACILITIES

The proposed redevelopment district is within the city limits of Wichita, Kansas. The district is generally bounded on the east by the Central Rail Corridor, Emporia Avenue and St. Francis Street, on the south by Lewis and Waterman Streets, on the west by Market and Main Streets, and on the north by Douglas Avenue and 1st Street North. Property owned by Sedgwick County and used for the Intrust Bank Arena is excluded from the redevelopment district.

The area included in the proposed district qualifies as a conservation area under state law governing the use of tax increment financing. A majority of the buildings in the area are more than 50 years old, many of which were built before 1930. Except for the Douglas Avenue corridor, most of the proposed redevelopment district is less densely developed than the northern part of Downtown Wichita, with more low-rise office, retail and warehouse structures and open parking lots. Over the years, many of the higher-density buildings in the area have been removed, leading to a pattern of under-utilization of property. Many of the surviving older buildings are showing signs of delapidation and need of rehabilitation.

SECTION 4: REDEVELOPMENT

The proposed district is located in an important redevelopment area within the City of Wichita, surrounding the site of the new Sedgwick County Arena, which is located between Emporia Avenue and the railroad tracks, between William and Waterman Streets. The redevelopment of this area has been the object of a major land-use and redevelopment planning project, called the Arena Neighborhood Redevelopment Plan. The Plan identifies and recommends a variety of land uses and infrastructure improvements to influence and guide the redevelopment of the area that is expected as a result of the construction of the arena. The establishment of the proposed redevelopment district will provide an appropriate source of funding to assist the City in providing infrastructure improvements and partnering with private developers in bringing new developments to the area.

The Arena Neighborhood Redevelopment Plan has conceptually divided the redevelopment district into four major redevelopment project areas, each with a distinct redevelopment goal. The ***Douglas Avenue Corridor District***

project area is located generally in the norther portion of the redevelopment district along Douglas Avenue and for which the redevelopment goal is to be a high intensity business corridor, primarily office and support commercial uses with upper level residential opportunities. The goal of the ***English/William Street District*** project area which is located generally in the center portion of the redevelopment district along English Street and William Street is to be a walkable urban mixed-use district of primarily commercial and office uses as well as public and residential uses. The ***Broadway Neighborhood District*** project area which is located generally in the southern portion of the redevelopment district and includes the area from Waterman to Kellogg and from Main to Emporia. Its goal is to redevelop as an urban residential environment with support commercial opportunities serving residents and Kellogg users. The ***Commerce Street Arts District*** project area which is located generally in the eastern portion of the redevelopment district and is to be a unique experiential arts area with live / work studio opportunities.

It is anticipated that there will be a number of individual redevelopment projects undertaken within the proposed redevelopment district, which will qualify for assistance from tax increment financing. Several are currently in various stages of preparation at this time. Projects will include mixed-use developments, residential, office, retail, entertainment, hotels and other uses. They will include demolition and new construction as well as rehabilitation of existing buildings.

SECTION 5: USE OF TAX INCREMENT FINANCING

Tax increment financing may generally be used for property acquisition, site preparation, utilities, drainage, street improvements, streetscape amenities, public outdoor spaces, landscaping and parking facilities in the redevelopment district; provided, however, that within the expansion area being added to the original Center City South Redevelopment District, which was established on May 8, 2007, by Ordinance No. 47-475, it is the expressed intent of the City of Wichita to limit the use of tax increment financing within the expansion area of the Center City South Redevelopment District to finance the costs of constructing, reconstructing and improving the following street segments, intersections, streetscape improvements, landscaping, lighting and signage projects, including the costs of design, engineering, surveying and inspection:

Market Street, Lewis Street to Douglas Avenue
Topeka Avenue, Lewis Street to Douglas Avenue
Emporia Avenue, Lewis Street to Douglas Avenue
St. Francis Avenue, William Street to Douglas Avenue
St. Francis Avenue, Lewis Street to Waterman Street
William Street, Main Street to Commerce Street
English Street, Main Street to Emporia Avenue
Lewis Street, Market Street to St. Francis Avenue
Wayfinding Improvements including Streetscape Design Manual

In addition to limiting the use of tax increment financing to the above specified improvement projects, the City will stipulate in the project plans for any redevelopment project located within the expansion area that an amount equal to seventy percent (70%) of the tax increment realized from taxpayers in the expansion area shall be allocated by the County Treasurer to the City to finance authorized project costs and the remainder shall be allocated and paid to taxing districts in the same manner as other ad valorem taxes. The limits described in this section shall not apply to redevelopment projects located in the original Center City South Redevelopment District.

SECTION 6: PROJECT PLANS

Per statute, any proposed redevelopment projects will be presented to the Governing Body in segments through the adoption of separate redevelopment Project Plans. Each Project Plan will identify specific project areas located within the established redevelopment district and will include detailed descriptions of the projects as well as a financial feasibility study that shows the economic benefits out-weigh the costs. Project Plans must be reviewed by the Metropolitan Area Planning Commission and submitted to a public hearing following proper notification of property owners and occupants, before they can be adopted by a two-thirds majority vote of the Governing Body. Only then can tax increment income be spent on redevelopment projects.

Map and Legal Description of Property to be Redeveloped

EXHIBIT B

Legal Description of the Douglas Place Redevelopment District

All property located in Wichita, Sedgwick County, Kansas within the boundaries beginning at the intersection of the centerline of Broadway Avenue and the north right of way line of Douglas Avenue; thence east to the east right of way line of Topeka Avenue; thence south to the south right of way line of William Street; thence west to the west of way line of Broadway Avenue; thence north to the point of beginning; and including all street rights of way within such described area.

EXHIBIT "I"

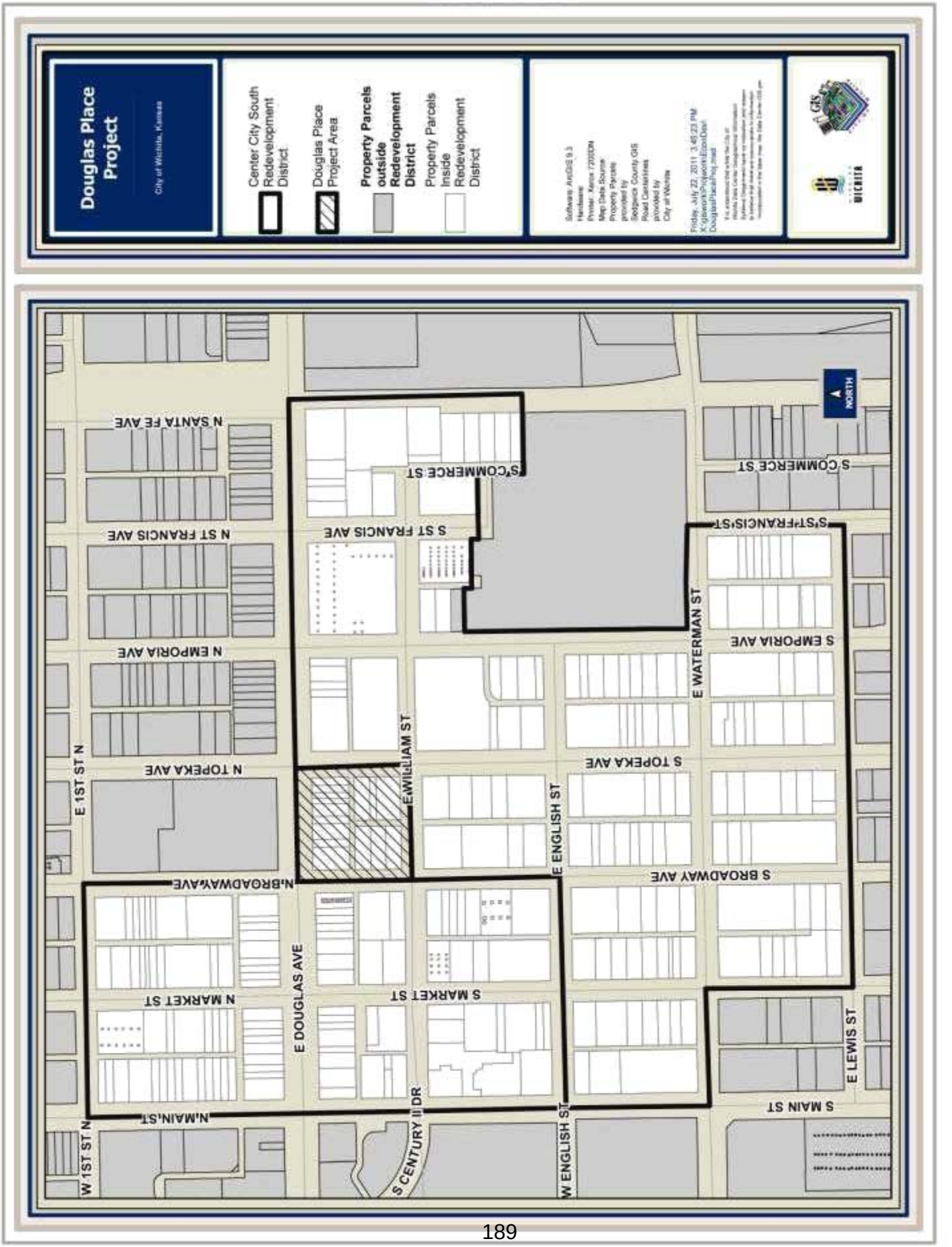
Douglas Place Project
City of Wichita, Kansas
Center City South Redevelopment District
Douglas Place Project Area
Property Parcels outside Redevelopment District
Property Parcels Inside Redevelopment District
Software: ArcGIS 9.3
Hardware:
Printer: Xerox 7200DN
Map Data Source:
Property Parcels provided by Sedgwick County GIS
Road Centerlines provided by City of Wichita
Friday, July 22, 2011 3:45:23 PM
K:\giswork\Projects\ExpoDist\DouglasPlaceProj.mxd
GIS
WICHITA
NORTH
N SANTA FE AVE
N ST FRANCIS AVE
N EMPORIA AVE
N TOPEKA AVE
E 1ST ST N
W 1ST ST N
N BROADWAY AVE
N MAIN ST
N MARKET ST
E DOUGLAS AVE
S COMMERCE ST
S ST FRANCIS AVE
E WILLIAM ST
S MARKET ST
S CENTURY II DR
E ENGLISH ST
W ENGLISH ST
S TOPEKA AVE
S BROADWAY AVE
S MAIN ST
E WATERMAN ST
S EMPORIA AVE
E LEWIS ST

Relocation Assistance Plan

RELOCATION ASSISTANCE PLAN

(KSA 12-1777)

Assistance for the relocation of persons, families or businesses from property acquired in conjunction with the Douglas Place Project is not required. No persons or families will be displaced as a result of the Project and no tenants will be relocated other than within the Douglas Place Project boundaries.

Description of Proposed Douglas Place Project

Center City South Redevelopment District

DESCRIPTION OF PROPOSED DOUGLAS PLACE PROJECT

In 2008 the City of Wichita began an effort to revitalize downtown and make it "Everybody's Neighborhood". The culmination of this effort is Project Downtown, a master plan adopted by the City Council and MAPC in 2010 and by Sedgwick County in 2011. The Plan identifies unique districts within downtown with development goals specific to each district's elements and location. The Douglas Place Project is within the Douglas Core Area with a focus on increased walk ability, retail and uses that benefit from nearby amenities, including hotels. The Plan further identifies William Street as a target walking street and the block south of the Douglas Place Project at Broadway and William as a Catalyst Site.

The Douglas Place Project addresses many of the goals for the Douglas Core Area. The Ambassador Hotel provides Historic renovation of a prime building and adds 117 hotel rooms to downtown. William Street is benefitted by a 250-300 stall parking garage, including enhanced walk ability with the urban park and retail space on the first floor of the garage. The garage further enhances the area by providing parking for the block and for the catalyst site of the old Allis Hotel on Broadway and William.

The Project consists of a complete historic renovation of the 14-story Douglas Place building into a 117 room boutique hotel. The building is located within the Douglas Core area on the corner of Douglas and Broadway. Renovation of the building will include a lobby and restaurant/bar on the 1st floor and large banquet facilities on the 2nd floor.

The southeast corner of the block is currently a paved parking. A 250-300 stall parking garage will be constructed on the corner. The first floor will include 8,400 square feet of retail space to support the walk ability of William Street.

The alleys on the block will be reworked to make them more compatible with pedestrians and vehicles as well as adding to the mid-block east/west circulation patterns identified in Project Downtown. An urban park will be developed between the Ambassador Hotel and the old Henry's building.

The Project Area also includes the long vacant former Henry's building. Redevelopment is under consideration and the value of future development of that building has been factored in to the tax increment estimates.

USE OF TAX INCREMENT FINANCING

The City of Wichita has undertaken the legal steps necessary to establish a redevelopment district pursuant to state laws (K.S.A. 12-1770 *et seq*.) in order to use

tax increment financing ("TIF") to fund a portion of the acquisition and development of a parking structure subject to a development agreement with Douglas Place, LLC. Upon adoption of this project plan, the City will have established its authority under state law to issue general obligation bonds to finance the TIF-funded improvements, which bonds will be repaid from the incremental increase in property taxes resulting from the redevelopment of the Project Area. The project costs consist of the following:

- **Property Acquisition** – The City will use Tax Increment Financing in the amount of $770,000 to acquire land for the parking garage.
- **Public Improvements** – The City will fund the costs of public improvements including a walkway up to $800,000.
- **Public Parking Garage** – The City will fund the costs of a 250-300 stall parking garage up to $6,000,000.
- **Total Project Costs** -- $7,570,000.
    - **TIF Funded Project Costs** -- $2,920,000
    - **Other City Funding** -- $4,650,000

Metropolitan Area Planning Commission Resolution

RESOLUTION

A RESOLUTION OF THE WICHITA-SEDGWICK COUNTY METROPOLITAN AREA PLANNING COMMISSION FINDING THAT THE CITY OF WICHITA, KANSAS REDEVELOPMENT PROJECT KNOWN AS THE DOUGLAS PLACE PROJECT IS CONSISTENT WITH THE COMPREHENSIVE GENERAL PLAN FOR THE DEVELOPMENT OF THE CITY OF WICHITA, KANSAS.

WHEREAS, the City, by Resolution No. 07-167 passed March 13, 2007, adopted a redevelopment district plan which identifies proposed redevelopment project areas and proposed buildings and facilities to be constructed or improved; and

WHEREAS, by Ordinance No. 47-475 adopted May 8, 2007, and published May 11, 2007, the City of Wichita established a redevelopment district pursuant to K.S.A. 12-1770 et. seq., as amended, known as the Center City South Redevelopment District; and

WHEREAS, by Ordinance No. 48-124 adopted December 9, 2008, and published December 12, 2008, the City of Wichita expanded the Center City South Redevelopment District pursuant to K.S.A. 12-1770 et. seq., as amended and, adopted an amended redevelopment district plan which identifies proposed and specific redevelopment project areas and improvements; and

WHEREAS, the City of Wichita proposes to undertake a Redevelopment Project within the Center City South Redevelopment District, consisting of land acquisition and construction of a public parking garage as set out in the Douglas Place Redevelopment Project Plan; and

WHEREAS, the City has prepared a Redevelopment Project Plan for said Project in accordance with K.S.A. 12-1772 and is considering the adoption of the Plan; and

WHEREAS, a relocation assistance plan under K.S.A. 12-1777 is included in the Redevelopment Project Plan; and

WHEREAS, K.S.A. 12-1772 provides that any City proposing to undertake a redevelopment project within a redevelopment district shall prepare a redevelopment project plan in consultation with the planning commission of the City; and

WHEREAS, the City's proposed redevelopment project plan has been presented to and reviewed by the Wichita-Sedgwick County Metropolitan Area Planning Commission;

NOW, THEREFORE, BE IT RESOLVED BY THE WICHITA-SEDGWICK COUNTY METROPOLITAN AREA PLANNING COMMISSION:

SECTION 1. It is hereby, after due consideration, found that the Douglas Place Redevelopment Project Plan for the Center City South Redevelopment District is consistent with the comprehensive general plan for the development of the City of Wichita, Kansas.

PASSED AND APPROVED by the Wichita-Sedgwick County Metropolitan Area Planning Commission, this 4th day of August, 2011.

(Seal)

Delna Mills Stevens
CHAIRMAN OF THE WICHITA-SEDGWICK COUNTY METROPOLITAN AREA PLANNING COMMISSION

ATTEST:

John L. Schlegel
Secretary, Wichita-Sedgwick County Metropolitan Area Planning Commission

APPROVED AS TO FORM:

Gary E. Rebenstorf, City Attorney

FACADE EASEMENT
FACADE IMPROVEMENT PROGRAM

THIS FACADE EASEMENT made this ____ day of _____, 2011, by and between Douglas Place, LLC, hereinafter called Grantor and the City of Wichita, Kansas, hereinafter called Grantee:

WITNESSETH THAT,

WHEREAS, the Grantee is a municipal corporation pursuant to state law; and

WHEREAS, the Grantee is authorized pursuant to K.S.A. 12-6a01 et. seq. to make or cause to be made improvements which confer a special benefit upon a property within a definable area of the city; and,

WHEREAS, the Grantee may levy and collect special assessments upon property deemed by the governing body to be benefited by such improvement; and,

WHEREAS, the Grantee may acquire an interest in property when necessary for any of the purposes of the statute; and,

WHEREAS, the Grantee is authorized to accept easements necessary for improvements to be financed through special assessment financing pursuant to K.S.A. 12-6a01; and,

WHEREAS, the Grantor is the owner in fee simple of the improved real property consisting of a lot and building improvements located at 104 South Broadway, Wichita, Kansas; and,

WHEREAS, the Grantor has submitted a Facade Improvement Petition for special assessment financing to improve, restore and enhance the facade of the premises; and,

WHEREAS, the grant of a facade easement by the Grantor to the Grantee will assist in the improvement of the property;

NOW, THEREFORE, in consideration of the sum of ONE and NO/100 DOLLARS ($1.00), and other good and valuable considerations, the receipt and sufficiency of which is hereby acknowledged, the Grantor does hereby grant, bargain, sell and convey to the Grantee, its successors and assigns, a twenty-five (25) year facade easement in and to the premises described herein.

The easement granted herein (which is more particularly described in Attachment “A” and which is incorporated herein by reference) shall constitute a binding servitude upon the premises and shall be deemed to run with the said premises for a period of twenty-five (25) years from the date hereof, but subject to earlier termination at such time as all special assessment financing on all phases of façade improvements shall have been retired. As a further condition of said easement, Grantor agrees to the following covenants, restrictions and obligations related to said facade:

1. Without the express written consent of the Grantee, signed by an authorized representative of the Grantee, no construction, alteration, remodeling or other action shall be undertaken or permitted to be undertaken which would affect the exterior facade improvements on the premises (including, without limitation the exterior walls, the roofs or chimneys) or which would adversely affect the structural soundness of improvements on the premises. In the event the Grantee does consent to construction, alteration, remodeling or other action which would affect the exterior facade of improvements on the premises, the Grantor agrees that such construction, alteration, remodeling or other action will conform with applicable local, state and federal standards for construction or restoration or rehabilitation of historic property. Grantor agrees on behalf of itself and any successor condominium owners association at all times to maintain the premises in good and sound state of repair and to bear the cost of all maintenance and repair of the premises.

2. The premises shall not be divided, diminished or subdivided nor shall the premises ever be devised or conveyed except that the premises may be divided into condominium units, the units may

be conveyed to buyers, and the remainder of the premises may be conveyed to a condominium owners association.

3. The premises shall only be used for a use consistent with the zoning ordinances of the City of Wichita.

4. No other structures may be constructed on the premises during the term of this facade easement without the express written permission of the Grantee, signed by an authorized representative of the Grantee.

5. No utility transmission lines, except those required by the existing structures or by structures permitted by the Grantee, may be placed on or over the premises.

6. No topographical changes shall be made or allowed on the premises without the express written permission of the Grantee, signed by an authorized representative of the Grantee.

7. Grantor agrees that representatives of the Grantee, its successors or assigns, shall be permitted at all reasonable times to inspect the premises. Inspections will normally take place on the exterior of the structures on the premises; however, Grantor agrees that representatives of the Grantee, its successors and assigns, shall be permitted to enter and inspect the structures on the premises to insure maintenance of structural soundness. Inspection of the interior of the structures will not take place more often than annually, in the absence of deterioration, and shall require prior notice to Grantor. Inspection of the interior of the structures will be made at a time mutually agreed upon by the Grantor and Grantee, its successors or assigns, and Grantor will not unreasonably withhold its consent in determining a date and time for such inspections.

8. In the event of a violation of any covenant or restriction herein, the Grantee, its successors and assigns, following reasonable notice to Grantor of the violation, may institute suit to enjoin such violation and to require restoration of the premises in compliance with the covenants or restrictions herein. The Grantee, its successors or assigns, shall also have available all legal and equitable remedies to enforce Grantor's obligations hereunder, and in the event Grantor is found to have violated any of its obligations, Grantor shall reimburse Grantee, its successors and assigns, for any costs or expenses incurred in connection therewith, including court costs and attorney's fees.

9. Grantor agrees that these covenants and restrictions will be inserted by it in any subsequent deed or other legal instrument by which it divests itself of either the fee simple title or its possessory interest in the premises, or any part thereof during the term of this facade easement. Grantor agrees to give Grantee written notice of any sale or mortgage of the premises or any part thereof within a reasonable time after such sale or mortgage.

10. Grantor agrees to maintain the facades of the premises in its original condition and configuration or in a condition or configuration which is agreed to by the Grantee.

11. Nothing herein contained shall impose any obligation or liability on the Grantee for the restoration, renovation, preservation or maintenance of the facades of the premises or any part of the premises. The Grantor shall indemnify and hold harmless the Grantee from any liability for any and all claims, demands, damages, judgments, costs or expenses in connection with the restoration, renovation, preservation and maintenance of the facades of the premises or any part thereof or in connection with the failure to restore, renovate, preserve or maintain the facades of the premise or any part of the premises.

12. The Grantor shall maintain insurance on the premises in such amount and on such terms as will allow the Grantee to restore, repair or rebuild the facade of the premises in the event the facade is damaged or destroyed. In the event of damage to or destruction of the facades of the premises, the Grantor alone may determine that the facade of the premises cannot be reasonably restored, repaired or reconstructed. In such event, the Grantee shall be entitled to receive from the Grantor the greater of the following: the fair market value of the easement granted herein at the time the easement was granted or the fair market value of the easement granted herein immediately before the facade of the premises was damaged or destroyed. However, any payment to the Grantee under the terms of this paragraph shall not terminate the easement granted herein, and the terms of the easement which are still applicable to the

premises shall remain in full force and effect. The provisions of this paragraph shall apply whether or not the Grantor maintains the insurance coverage required by this paragraph. In the event the Grantee receives any payment under the terms of this paragraph, the Grantee shall use such payment in a manner consistent with the purpose of this easement.

13. Grantor acknowledges that the easement granted herein gives rise to a property right, vested immediately, with fair market value that is a minimum ascertainable portion of the fair market value of the premises. Thus, if a subsequent unexpected change in the conditions surrounding the premises makes it impossible or impracticable to preserve the premises for the purposes for which the easement was granted and restrictions imposed by the easement granted herein are terminated by judicial proceedings, the Grantee, on a subsequent sale, exchange or involuntary conversion of the premises, will be entitled to a portion of the proceeds determined in accordance with the ratio that the fair market value of the easement granted herein determined on the date of this Facade Easement is executed, unless state law determines that the Grantor is entitled to full proceeds from the conversion without regard to the terms of the prior restrictions imposed by the Facade Easement. In the event the Grantee receives such proceeds from the subsequent sale, exchange or involuntary conversion of the premises, the Grantee shall use such proceeds in a manner consistent with the terms conservation/enhancement purposes of the easement.

The covenants and restrictions imposed by the aforesaid, shall not only be binding upon the Grantor, but also upon its heirs, assigns, and all other successors in interest, and shall continue as a servitude running for the twenty-five year term of the Facade Easement with the land and shall survive the Grantor and any termination of the Grantor's existence. All rights reserved herein to the Grantee shall run for the benefit of and be exercised by its successors, assigns, or by its designee duly authorized.

IN WITNESS WHEREOF, the parties hereto have executed these presents as of the day and year first above written.

[SIGNATURES FOLLOW ON PAGES BELOW]

GRANTOR:

Douglas Place, LLC

By: _____
David Burk, Managing Member – Douglas Place, LLC

State of _____)
County of _____)

Signed or attested before me on _____ by _____, Managing Member, Douglas Place, LLC.

_____
Notary Public (Date)

(Seal)

My appointment expires: _____

GRANTEE:
CITY OF WICHITA, KANSAS
By Direction of the City Council

_____ _____
Carl Brewer, **(Date)**
Mayor

ATTEST:

_____ _____
Karen Sublett, **(Date)**
City Clerk

State of _____)
County of _____) **(Date)**

Signed or attested before me on
_____ by
_____
.

_____
Notary Public

(Seal)

My appointment expires:
_____

APPROVED AS TO FORM:

_____ _____
Gary E. Rebenstorf, **(Date)**
City Attorney and Director of Law
of the City of Wichita

ATTACHMENT: A

Building Facade Improvement 104 S. Broadway

Property Subject to Easement

LOTS 1, 3, AND 5 ON DOUGLAS AVENUE, N.A. ENGLISH'S ADDITION, CITY OF WICHITA, SEDGWICK COUNTY, KANSAS
PIN #00123242

Exhibit "7"

PARKING AGREEMENT

This Parking Agreement ("Agreement") is executed this ___ day of _____, 20___, by and between The City of Wichita ("City") and Douglas Place, LLC, a Kansas limited liability company ("Douglas Place").

1. Douglas Place (sometimes, "Owner") is the owner of the land and building at the southeastern corner of the intersection of Broadway Avenue and Douglas Avenue, Wichita, Kansas, having a street address of 104 S. Broadway, Wichita, Kansas 67202 ("Douglas Place Property"). Owner will operate a 117 room hotel ("Hotel") on the Douglas Place Property and requires the continuous availability of 125 parking spaces within a multi-story parking building to be owned, constructed and operated by the City on land near the Douglas Place Property at the northwestern corner of the intersection of South Topeka Avenue and East William Street (the "Parking Building"). The City shall diligently pursue the construction of the Parking Building so that it is completed on or prior to December 14, 2011.

2. The City shall make available for use by Owner, and its occupants, invitees and licensees, undesignated 125 parking spaces within the Parking Building during the term hereof. The Parking Building shall be constructed and operated to allow automated access/departure and tracking of the users of the 125 parking spaces made available under this Agreement, and for other parking spaces made available pursuant to other agreements with the City. The parking spaces made available hereunder may be used 24 hours each day during the term hereof.

3. The term of this Agreement shall extend from the first day that the Owner begins to rent rooms for occupancy in the Hotel ("Commencement Date") but not later than January 1, 2013 and for a ten (10) year period thereafter; provided, the term will renew automatically annually thereafter, up to an aggregate total of fifty (50) years, unless and until terminated by the Owner at any time upon a minimum of sixty (60) days prior written notice given to the City. The above described term is subject to early termination by the City if the Douglas Place Property is no longer operated as a hotel.

4. The Owner shall pay an annual parking fee ("Fee") to the City during the term hereof following the Commencement Date. During the initial ten (10) year period following the Commencement Date, the Fee for each full calendar year shall be an amount equal to sixty percent (60%) of the actual Operating Expenses incurred by the City or its third party operator for the Parking Building during the applicable year, but not to exceed Seventy-Five Thousand Dollars ($75,000.00) ("Fee Cap") in any such calendar year. As used in the preceding sentence and elsewhere herein "Operating Expenses" shall mean the cost of utilities serving the Parking Building; the costs and expense of maintaining and repairing the Parking Building, including but not limited to the striping of parking spaces, lighting and cleaning the Parking Building; the costs of salaries and/or wages of persons directly engaged in services rendered to the Parking Building; trash removal; snow removal; sweeping; security; the costs of supplies, tools, replacement parts or components; repair of automated equipment; city administrative costs (including imputed interest cost of using the City's idle funds to pay operating costs); management fees; taxes and the premiums for insurance maintained by the City in connection with the Parking Building. None of the costs and expenses related to any area within the Parking Building which is intended to be used for any purpose other than the parking of motor vehicles shall be included in the Operating Expenses. Further, the Operating Expenses shall not include the principal or interest on indebtedness, deprecation, or costs properly charged to a capital account, except for capital expenditures which reduce the Operating Expenses, which such costs shall be charged only on an amortized basis over the life of the improvements as determined by the City in accordance with general accepted accounting procedures. The determination

of Operating Expenses shall be made on a calendar year basis, so unless the Commencement Date occurs on any day of the year other than January 1st, the Fee for the first partial calendar year and the final partial calendar year during the term hereof shall be prorated. The Fee shall be paid in one installment within twenty (20) days following the date the City provides Owner with a detailed accounting of the Operating Expenses for the prior calendar year, or a portion thereof; provided, in the event the Owner has questions or disputes concerning the amount of the Operating Expenses, such payment may be delayed an additional twenty (20) days in order that the Owner and representatives of the City may discuss and evaluate the correct amount of the Operating Expenses. In no event shall the Fee Cap exceed Seventy-Five Thousand Dollars ($75,000.00) during the initial ten (10) year term hereof. The Fee Cap for each calendar year, or portion thereof, during the term of this Agreement following the initial ten (10) year period shall be increased to an amount equal to one hundred three percent (103%) of the Fee Cap for the immediately preceding full calendar year. For illustrative purposes only, the Fee Cap for the final full calendar year of the initial ten (10) year term hereof is Seventy-Five Thousand Dollars ($75,000.00) then the Fee Cap for the first full renewal calendar year shall be Seventy-Seven Thousand Two Hundred and Fifty Dollars ($77,250.00).

In the event the Owner fails to pay the Fee on the date it is due hereunder, the City shall notify the Owner in writing of such failure. In the event the Owner then fails to pay the applicable Fee in full within ten (10) days following receipt of such notice of delinquency from the City, the unpaid Fee shall accrue interest at the rate of twelve percent (12%) per annum until the delinquent Fee and accrued interest are paid in full to the City.

5. In addition to and as a complete alternative to all other remedies that the City may be entitled to under the law, the Owner agrees that all sums to be paid hereunder, when delinquent beyond any notice and cure time required hereunder, may be certified by the Clerk of the City to the County Clerk of Sedgwick County, Kansas, to be placed on the tax roll for collection, subject to the same penalties and to be collected in like manner as other taxes, and such sums shall, thereafter, constitute a lien upon the Douglas Place Property.

6. This Agreement shall be a covenant running for the term thereof with the Douglas Place Property and the Parking Building, and this instrument may be filed of record with the Register of Deeds of Sedgwick County, Kansas.

7. From and after the Commencement Date, the City shall maintain, repair and replace the Parking Building, and the systems and components thereof in good operating condition and appearance throughout the term of this Agreement, including, but not limited to, the automated access/departure and tracking equipment which is a part thereof.

8. Miscellaneous:

A. This Agreement constitutes the entire understanding between the parties hereto on the subject matter hereof, and there are no agreements, understandings, warranties or representations between the parties hereto on the subject matter hereof except as set forth herein. This Agreement cannot be amended except in writing executed by the City and Owner.

B. This Agreement will inure to the benefit of and bind the respective successors and assigns of the parties hereto.

C. This Agreement has been executed by the parties on the dates set forth below their respective signatures.

D. This Agreement is to be governed by the laws of the State of Kansas.

E. Douglas Place, LLC and any subsequent Owner of the Douglas Place Property may not assign its rights and obligations except in connection with the sale of Hotel without the prior consent of City. Upon any assignment by Douglas Place, LLC or any subsequent Owner of the Douglas Place Property in connection with the sale of the Hotel, then the assignor's liabilities and obligations hereunder for the period from and after the date of such assignment shall be binding upon assignee and the assignor shall be released for any further liabilities and obligations arising for the period from and after the date of such assignment. Nothing herein shall be construed to prohibit an Owner, or require an Owner to obtain consent from the City, from, or in connection with, the Owner's authorization of a licensee, lessee or other authorized operator of the Hotel, or any part thereof, and the invitees and licensees of such licensees, lessees or authorized operators, from using the parking spaces made available in the Parking Building pursuant to this Parking Agreement.

G. Any notice pursuant hereto shall be given in writing by (i) personal delivery, or (ii) nationally recognized overnight delivery service with proof of delivery, or (iii) United States Mail, postage prepaid, registered or certified mail, return receipt requested, sent to the intended addressee at the address set forth beneath the signatures below (or such other address as either party shall hereafter designate by at least ten (10) days advance written notice to the other party), and shall be deemed to have been given either at the time of personal delivery or, in the case of expedited delivery service or mail, as of the date of first attempted delivery at the address . Any such notices may be under the signature of either party (as the case may be) by such party's agent, attorney, or representative.

F. If any term or provision of this Agreement or the application thereof to any person or circumstance shall, to any extent, be invalid or unenforceable, the remainder of this Agreement, or the application of such term or provision to persons or circumstances other than those as to which it is held invalid or unenforceable, shall not be affected thereby, and each such term and provision of this Agreement shall be valid and be enforced to the fullest extent permitted by law.

[Signature Pages follow.]

IN WITNESS WHEREOF, the parties have hereunto set their hands as of the day and year aforesaid.

THE CITY OF WICHITA

By: _____
Carl Brewer, Mayor

"CITY"

ATTEST:

By: _____
_____, City Clerk

Address for Notice Purposes:

City of Wichita
455 N. Main, 13th Floor
Wichita, KS 67202
Attn: City Manager

APPROVED AS TO FORM:

By: _____
Gary E. Rebenstorf
City Attorney
_____, 2011

STATE OF KANSAS)
)ss:
COUNTY OF SEDGWICK)

BE IT REMEMBERED, that on this ___ day of _____, 20__, before me a Notary Public in and for the County and State aforesaid, personally appeared Carl Brewer, the Mayor of The City of Wichita, a municipal corporation, personally known to me to be such officer and the same person who executed, as such officer, the above and foregoing instrument in writing on behalf of said corporation and such person duly acknowledged the execution of the same to be the act and deed of said corporation.

IN WITNESS WHEREOF, I have hereunto set my hand and official seal the day and year last above written.

_____
NOTARY PUBLIC

My Appointment Expires:

DOUGLAS PLACE, LLC,
a Kansas Limited Liability Company

By: _____
David C. Burk, Manager

"DOUGLAS PLACE"

Address for Notice Purposes:

David C. Burk
Market Place Properties, L.L.C.
151 N. Rock Island, Suite 1A
Wichita, Kansas 67202

STATE OF KANSAS)
)ss:
COUNTY OF SEDGWICK)

BE IT REMEMBERED, that on this ___ day of _____, 20__, before me a Notary Public in and for the County and State aforesaid, personally appeared David C. Burk, the Manager of Douglas Place, LLC a Kansas limited liability company, personally known to me to be such Manager, and the same person who executed, as such Manager, the above and foregoing instrument in writing on behalf of said limited liability company and such person duly acknowledged the execution of the same to be the act and deed of said limited liability company.

IN WITNESS WHEREOF, I have hereunto set my hand and official seal the day and year last above written.

_____
NOTARY PUBLIC

My Appointment Expires:

Exhibit 1

PARKING STRUCTURE RETAIL LEASE

THIS PARKING STRUCTURE RETAIL LEASE ("Lease"), made and entered into this ____ day of _____, 2011, in Wichita, Sedgwick County, Kansas

BY AND BETWEEN	THE CITY OF WICHITA
	Hereinafter referred to as "Landlord"
AND	DOUGLAS PLACE, LLC, a Kansas limited liability company
	Hereinafter referred to as "Tenant"

WITNESSETH:

WHEREAS, Landlord is the owner of certain real property described and depicted on the Exhibit "A" attached hereto which real property and improvements are referred to herein as the "Parking Facility Property"; and

WHEREAS, Landlord intends to construct a parking structure located at the northwest corner of south Topeka Street and William Street, containing approximately 282 parking stalls on multiple levels (the "Parking Structure"); and

WHEREAS, Landlord intends to construct within the ground level of the Parking Structure retail space containing approximately 8,400 square feet of surface floor area as depicted on Exhibit "B" hereto, which space is referred herein to as the "Premises"; and

WHEREAS, Landlord desires to lease to Tenant, and Tenant desires to lease from Landlord, the Premises.

NOW THEREFORE, for good and valuable consideration, the parties do hereby agree as follows:

1. TERM; USE; RENEWAL.

a. Grant, Term and Possession. Landlord does hereby grant, lease and let to Tenant, and Tenant does hereby rent from Landlord the Premises for a term of twenty (20) years (the "Primary Term") commencing on the date (the "Commencement Date") Landlord delivers the Premises to Tenant, "Ready for Occupancy" (hereafter defined). Landlord shall endeavor in good faith to deliver possession of the Premises to Tenant, Ready for Occupancy, by January 1, 2013. For the purposes of this Lease, "Ready for Occupancy" means that Landlord has substantially completed Landlord's work described in Exhibit "C" (herein "Landlord's Work"), which is attached hereto and made a part hereof by this reference. The term "substantially completed" shall mean that Landlord shall have completed all of Landlord's Work with the exception of items which do not materially interfere with Tenant's use of the Premises as a retail store. Landlord shall cause the Premises to be established as a property parcel, separate and apart for the Parking Facility Property prior to the commencement date so that the

ad valorem taxes for the first lease year hereunder shall be separate from any other portion of the Parking Facility Property.

b. Use. Tenant shall use and occupy the Premises for any lawful purposes and uses incidental thereto; provided the Premises may not be used or occupied for any of the Prohibited Activities listed on Exhibit "D" hereto.

c. Holdover. In the event of a holdover beyond the term hereof by Tenant, without Landlord's permission, Tenant shall be liable to Landlord for rent during the unauthorized holdover period (determined on a daily basis) in an amount equal to 150% of the amount of the rent in effect as of the expiration or earlier termination of this Lease. Such unauthorized holdover shall not be construed to create any periodic tenancy rights in favor of Tenant.

d. Options Upon Expiration of the Primary Term. A minimum of ninety (90) days prior to the expiration of the Primary Term hereof, Tenant shall notify the City whether it desires to exercise either of the following options:

(1) Manage, lease, coordinate the maintenance and repair of the Premises for a five (5) year period beginning on the day following the expiration of this Lease, with the option to renew such agreement for three (3) additional five (5) year renewal periods in Tenant's discretion. Such management services shall be pursuant to the City standard form property management agreement in place at the time this option is exercised, and Tenant shall be compensated in an amount of six percent (6%) of the gross rentals received by the City from the Premises. Promptly following receipt of Tenant's notice exercising the option under this subparagraph (i), the City shall prepare the management agreement provided to Tenant and if the terms are satisfactory to Tenant, the City and Tenant shall promptly execute the same. Upon the expiration of this Lease the City shall assume and perform all of Tenant's duties and obligations under existing subleases where the term of any such sublease extends beyond the termination date of this Lease. Any subtenant security deposit held by Tenant shall be delivered to the City upon termination of this Lease; or

(2) Purchase the Premises from the City for a purchase price of $1,120,000.00. In the event such purchase is exercised by Tenant, the City and Tenant shall execute a purchase agreement providing for the purchase of the Premises pursuant to the City's delivery of a good and sufficient deed; a policy of title insurance shall be issued to the Tenant in the amount of the purchase price, subject only to the condominium declaration, easements and leases in place at the time of the expiration of the term of this Lease; the parties shall equally share the costs of the title insurance policy and closing fees and charges; the purchase price shall be paid in full at the closing by Tenant; and the closing shall occur on or before the date of the expiration of this Lease (if before such expiration, then the rent payable hereunder shall be prorated). Promptly following its receipt of notice from Tenant that it is exercising its right to purchase under this subparagraph (2), Landlord shall cause the Premises to be established as a condominium separate and apart for the Parking Facility Property and Parking Structure pursuant to the Kansas apartment Ownership Act, K.S.A. 58-3101 *et seq*. Landlord shall obtain Tenant's prior written consent to the condominium documentation before the completion and recordation of the same. The common elements and unit(s) described in the condominium documents shall constitute the Premises. The parties will bear the costs to prepare the condominium declaration, the required survey and other related costs equally.

2. RENTAL.

a. Amount. Tenant agrees and covenants to pay as fixed rent for the Premises, for the primary term hereof, one dollar ($1) per year on or before the Commencement Date, which sum shall constitute the annual fixed rent for the initial five (5) lease years following the Commencement Date. As used herein the term "lease year" shall mean each consecutive twelve (12) month period, commencing on the Commencement Date hereof.

The annual fixed rent to be paid by Tenant hereunder for the following lease years shall be as follows:

Lease Year Period	Annual Fixed Rent
6-15 inclusive	$21,000
16-20 inclusive	$63,000

The annual fixed rent shall be paid in equal monthly installments on the first day of each calendar month during the term of this Lease. In the event the Commencement Date occurs other than the first day of a calendar month, the fixed monthly rent shall be prorated for the first and final month of the term hereof and the rent for the partial month at the beginning of the term shall be paid to the Landlord on the Delivery Date.

b. Landlord's and Tenant's Address.

(1) The rental payments and notices shall be taken to or mailed to Landlord at the following address: City of Wichita, Property Management, 455 North Main, 13th Floor, Wichita, Kansas 67202; with a copy of any notice sent to the City Attorney's Office, 455 North Main, 13th Floor, Wichita, Kansas 67202, to the attention of the City Attorney, or to such other person or corporation or at such other place as Landlord shall designate in writing to Tenant.

(2) Notices and invoices shall be taken or mailed to Tenant as follows: prior to the commencement of the term hereof to 151 N. Rock Island, Suite 1A, Wichita, Kansas 67202; with a copy to Ron H. Harnden, Triplett, Woolf & Garretson, LLC, 2959 North Rock Road, Suite 300, Wichita, Kansas 67226, or to such other person or corporation or at such other place as Tenant shall designate in writing to Landlord.

3. ADDITIONAL CHARGES; UTILITIES AND OTHER MATTERS.

a. Interest Charges. Rent and other monies due Landlord under this Lease not paid within five (5) days after its due date shall bear interest from the date due at the highest rate allowed by law but not to exceed one (1%) percent per month.

b. Utilities, Janitorial, Telephone Service and Taxes.

(1) Tenant shall provide and pay for its trash removal service from the Premises.

(2) Tenant agrees to contract with and timely pay for electric current, gas, water, sewer and other utilities, janitorial service, and telephone service serving the Premises.

(3) Tenant agrees to pay before delinquency the ad valorem taxes attributable to the Premises for the term hereof. Landlord shall provide Tenant with a copy of the tax statement pertaining to the Premises (but not the Parking Facility Property or Structure other than as specifically limited to the Premises) within five (5) business days after the receipt thereof. Tenant shall provide evidence to Landlord of the payment of such taxes promptly following the payment thereof. Such taxes shall be prorated for the first and final lease years, based on the portion of the applicable tax years included in the first and final lease years. Only Landlord shall have the authority to file any protests or appeals related to any ad valorem taxes.

(4) Except for a cessation or interruption cause by the negligence or intentional misconduct of Landlord or Landlord's agents, employees or contractors, Landlord shall not be liable to Tenant for any cessation or interruption of gas, water, electricity, telephone, or other utility service during the term hereof, or any extension thereof. A cessation or interruption of gas, water, electricity, telephone, or other utility service shall not be construed as an eviction of Tenant, work as abatement of rent, or relieve Tenant from fulfillment of any covenant or agreement hereunder; provided, however, if such cessation or interruption lasts longer than two (2) business days, is caused by an act or acts of Landlord or Landlord's agents, employees or contractors and, as a result thereof, so that Tenant is unable to reasonably use the Premises for its intended use, then rent shall abate during the period that such cessation or interruption continues from and after the expiration of the two (2) business day grace period.

4. INSURANCE; WAIVER.

a. Tenant's Liability Insurance. With respect to the Premises, Tenant shall, at Tenant's sole cost and expense, obtain and keep in force at all times during the term of this Lease, comprehensive general liability insurance, including property damage, in the amount of at least One Million Dollars ($1,000,000.00) combined single limit, insuring against any liability arising out of Tenant's use or occupancy of the Premises. Tenant may carry said insurance under a blanket policy providing, however, said insurance by Tenant shall have a Landlord's protective liability endorsement attached thereto. Insurance required hereunder shall be in companies licensed in the State of Kansas and shall have a rating of B+ or better in "Best's Insurance Guide" and a financial rating of Class VII or better. Mutual insurance companies may be used only if they are nonassessable. Such policy shall name Landlord as an additional insured. No policy shall be cancelable or subject to reduction of coverage except after fifteen (15) days written notice to Landlord. Tenant shall provide Landlord a certificate, or other evidence reasonably satisfactory to Landlord, of insurance at or prior to the commencement of the term hereof, and thereafter upon request by Landlord.

b. Contents. At all times during the term of this Lease, Tenant shall maintain at its own cost and expense, with a responsible insurance company or companies, a policy of insurance covering Tenant's trade fixtures, furniture, furnishings, inventory, equipment and leasehold improvements, insuring same against all risk perils.

c. Tenant Casualty Insurance. During the term of this Lease, Tenant shall maintain in full force and effect "all risk" property insurance on a replacement cost basis, insuring against fire and loss or damage from risks or hazards covered by a broad form extended coverage policy, including water damage, throughout the term hereof in an amount equal to the full replacement value (without deduction for depreciation but exclusive of the cost for excavation or foundations) of the non-structural portion of the Premises, including any leasehold improvements made to the Premises.

d. Waiver of Subrogation. To the extent covered by insurance required to be maintained hereunder, Landlord and Tenant each waive and release the other from any liability, claim, right of recovery or cause of action for any damage or destruction to the property of the releasing party, even if caused by the negligence of the other party, or of its contractors, representatives, agents or employees.

5. MAINTENANCE, REPAIRS AND OTHER MATTERS.

a. Landlord's Responsibilities. Other than with respect to matters for which Tenant is responsible under paragraph 5.b. below, and subject to the waiver of subrogation provisions of paragraph 4.d. hereof, Landlord shall, at Landlord's expense, perform the following maintenance, repairs and replacements:

(1) As needed to maintain the integrity of the structure of the Parking Structure, such as foundation, structural posts, beams, and the walls and roof which are a part of the Parking Structure beyond the demised ceiling and walls of the Premises;

(2) Maintain and repair the Parking Structure and all access areas on the Parking Facility Property, including snow removal (if snow accumulates more than three (3") inches); and

(3) Make all repairs to the electrical or plumbing systems servicing the Premises to the extent the same are located outside of the Premises.

Landlord shall be under no obligation and shall not be liable for any failure to perform such maintenance or repairs until and unless Tenant notifies Landlord, in writing, of the necessity therefor, in which event Landlord shall have a reasonable time thereafter to make such maintenance or repairs.

b. Tenant's Responsibilities. Other than with respect to matters for which Landlord is responsible, and subject to the waiver of subrogation provisions of paragraph 4.d. hereof, Tenant shall, at Tenant's expense, perform the following maintenance, repairs and replacements:

(1) Maintain the Premises and the fixtures and appurtenances therein., at all times during the term of this Lease, in good condition and repair, ordinary wear and tear excepted;

(2) Repair, restore or replace all damage or injury to the Premises and to its fixtures, appurtenances and equipment or to the Parking Facility Property caused by Tenant moving property in or out of the Parking Facility Property or by installation or removal of furniture, fixtures or other property or resulting from any cause of any kind or nature whatsoever due to carelessness, omission, neglect, improper conduct or other cause of Tenant, its servants, employees, agents, visitors, or licensees. All the aforesaid repairs, restorations or replacements shall be in quality and class equal to the original work or installations; and

(3) Maintain all landscaping within the Parking Facility Property.

On the Commencement Date, Landlord shall assign and transfer to Tenant the warranties and guarantees pertaining to any part of the Premises Tenant is to maintain hereunder.

c. Laws; Rules. Tenant hereby agrees to use the Premises in compliance with all laws, ordinances, order, rules, and regulations (state, federal, municipal and other agencies or bodies having any jurisdiction thereof). Tenant further agrees to comply with all reasonable rules and regulations

which may be established from time to time by Landlord upon delivery of a copy thereof to Tenant, provided such rules and regulations do not inhibit Tenant's right to conduct business as provided in this Lease and are not discriminatory against Tenant. Notwithstanding the foregoing, in the event of a conflict or inconsistency between any such rule or regulation and any provision of this Lease, the provision of this Lease shall govern and control. Tenant will not violate or permit the violation of any condition imposed by the standard fire insurance policy issued for office buildings in the Wichita, Kansas area, and will not do anything or keep anything in the Premises which would increase the fire or other casualty insurance rate on the Parking Structure or the property therein, or which would result in the insurance companies of good standing refusing to insure the Parking Structure or any such property in amounts and against risks reasonably determined by Landlord.

d. Surrender of Premises. At the expiration or other termination of this Lease, Tenant shall, subject to the existing subleases with subtenants whose sublease terms extend beyond Tenant's surrender of the Premises and except for reasonable wear and tear, condemnation or acts or omissions of Landlord, deliver up the Premises in good order and condition, including:

(1) Removing all Tenant's trade fixtures, furniture, equipment and supplies, and repairing any damage caused by such removal, which are not in the Premises in connection with a sublease.

(2) Cleaning and hauling away all trash from vacant, unsubleased portions of the Premises so that the Premises are in a "broom clean" condition.

(3) Returning to Landlord all keys to all door locks.

(4) Assign to Landlord all subleases which remain in effect and Tenant shall assume all of landlord's obligations thereunder which arise from and after such assignment. All rent under any such subleases shall be prorated as of the date of the expiration of this Lease. Tenant shall deliver to Landlord copies of all agreements with subtenants whose lease terms extend beyond Tenant's surrender of the Premises.

e. Tenant's Taxes. In addition to the ad valorem taxes as referenced in subparagraph 3. b (3) Tenant shall pay or cause to be paid, before delinquent, any and all taxes levied or assessed during the term hereof, or any extension or renewal thereof, upon any and all of Tenant's leasehold improvements, equipment, furniture, fixtures, and personal property located in the Premises. If the same shall be assessed and taxed with the Parking Structure, Tenant shall pay to Landlord its share of such taxes within ten (10) days after delivery to Tenant of a written statement by Landlord setting forth the amount of such taxes applicable to Tenant's property.

6. ALTERATIONS, ADDITIONS, IMPROVEMENTS; SIGNS.

a. Alterations. Tenant may erect such alterations, additions and improvements within the Premises as are necessary to accommodate sublessees which are to occupy the same in accordance with this Lease. All such alterations, additions or improvements shall be performed in a workmanlike manner and shall not weaken or impair the structural strength of the Parking Structure and the Premises, or change the purposes for which the Parking Structure, or any part thereof, may be used. Tenant will obtain all necessary governmental permits and authorizations.

b. Claims For Liens. Any such approved alterations, additions or improvement shall be erected at the sole cost and expense of Tenant, and Tenant shall have no right, authority, or power to bind

Landlord, or any interest of Landlord in the Premises, for the payment of any claim for labor or material or for any charge or expense incurred in the erection, construction, or maintenance lien for labor, material, or any other charge incurred in connection therewith, and Tenant shall in no way be considered the agent of Landlord in the erection, construction, operation or maintenance of said improvements and Premises. Tenant agrees to supply lien waivers for all labor and materials in connection with any such approved alterations, additions and improvements. Tenant shall indemnify, defend and hold Landlord harmless from any mechanic's or materialman's liens filed with respect to the Parking Facility Property, or any portion thereof, arising out of work performed by or at the request of Tenant, together with all actions, proceedings, liabilities, costs or expenses, including reasonable legal fees, expended by Landlord as a result thereof.

c. Nature Of Improvements. All alterations, additions and improvements, except "trade fixtures", installed at the expense of Tenant, shall remain upon and be surrendered with the Premises as a part thereof, at any termination of this Lease, for any cause, and shall become the property of the Landlord. The term "trade fixtures" shall include, without limitation, Tenant's, and/or Sub-Tenant's, furniture, fixtures, office equipment, kitchen appliances, and movable personal property. Tenant shall repair any damage to the Premises caused by Tenant's, and/or Sub-Tenant's, removal of its trade fixtures.

d. Signs. The Landlord shall approve the design, location, and placement of any sign, any portable sign, decoration, marquee, exterior light, or similar item prior to installation thereof on the exterior of the Premises, which approval shall not be unreasonably withheld, conditioned or delayed. If Tenant does not comply promptly, Landlord may remove said item at the expense of Tenant. Tenant shall obtain any necessary permits for any such approved items and shall maintain such items in accordance with all applicable laws and ordinances and in a state of repair reasonably satisfactory to Landlord.

8. LIABILITY OF TENANT AND LANDLORD.

a. Landlord's Liability. Unless caused by the negligence or intentional misconduct of Landlord or Landlord's agents, employees or contractors or the failure of Landlord to perform its maintenance obligations set forth in this Lease, all fixtures and personal property of any kind or description whatsoever in the Premises shall be at Tenant's sole risk. Landlord shall not be liable for any damage done to or loss to such personal property or for damage or loss suffered by the business or occupation of Tenant arising from any act or omission of co-tenants or of other occupants of the Premises (other than Landlord) or of their employees or of contractors.

b. Indemnity. Subject to the wavier of subrogation provisions set forth in subparagraph 4.d. hereof: (i) Tenant will defend, by counsel acceptable to Landlord, indemnify and save harmless Landlord of and from any and all fines, suits, claims, demands, expenses, costs and actions of any kind to the extent the same arise out of, directly or indirectly the acts or omissions of Tenant or Tenant's agents or employees within the Premises or Parking Structure, or any breach, violation or non-performance of any covenant hereof on the part of Tenant; and (ii) Landlord will defend, by counsel acceptable to Tenant, indemnify and save harmless Tenant of and from any and all fines, suits, claims, demands, expenses, costs and actions of any kind to the extent the same arise out of, directly or indirectly, the acts or omissions of Landlord or Landlord's agents or employees within the Parking Structure, or any breach, violation or non-performance of any covenant hereof on the part of Landlord.

9. QUIET POSSESSION. Landlord agrees that so long as Tenant fully complies with all of the terms, covenants and conditions herein contained on Tenant's part to be kept and performed, Tenant shall and may peaceably and quietly have, hold and enjoy the said Premises for the term aforesaid. Landlord covenants and represents that Landlord has full right, title, power, and authority to make, execute and deliver this Lease.

10. NOTICES. All notices to be given with respect to this Lease shall be in writing. Each notice may be delivered in person, or may be sent by registered or certified mail, postage prepaid and return receipt requested, to the party to be notified at the address set forth herein or at such other address as either party may from time to time designate in writing. Every notice mailed shall be deemed to have been given two (2) days following the date it is deposited in the United States mail, or the date it is received, whichever is earlier.

11. DESTRUCTION OF PREMISES.

a. Total Destruction. In the event that the Premises should be totally destroyed by fire, tornado or other casualty or if the Premises should be so damaged that rebuilding or repairs cannot be completed within one hundred twenty (120) days from and after the date of such damage, Tenant shall have the option of terminating this Lease by giving written notice to the other at any time prior to the thirtieth (30th) day after the date of such damage. In the event of such a termination, the rent and all other charges for the unexpired term of the Lease shall be abated in full from and after the date of such damage or destruction.

b. Partial Destruction. If the Premises are partially damaged by fire, tornado, or other casualties, or totally destroyed thereby and not terminated under subsection (a) above, this Lease within the provisions of subparagraph a. above, then the Tenant agrees to restore the Premises to a kind and quality substantially similar to that immediately prior to such destruction or damage. Said restoration shall be commenced within thirty (30) days after the date of such damage and diligently prosecuted to completion by Tenant. Rent accruing after the date of the damage shall be equitably and proportionately suspended and adjusted according to the nature and extent of the destruction or damage, pending completion of rebuilding, restoration or repair, except that in the event the destruction or damage is so extensive as to make it unreasonable for the Tenant to conduct its business on the Premises, the rent shall be completely abated until the Premises are restored by the Tenant or until the Tenant resumes the conduct of its business on the Premises, whichever shall first occur. The Landlord shall not be liable for any inconvenience or interruption of business of the Tenant occasioned by fire, tornado or other casualty.

12. CONDEMNATION.

a. Total Condemnation. If during the term of this Lease, or any renewal thereof, the whole of the Premises, access to the Premises or such portion thereof as will make the Premises unusable for the purpose leased, as determined in Tenant’s reasonable judgment, shall be taken for any public or quasi-public use by eminent domain or similar law or by private purchase or other agreement in lieu thereof (referred to herein as a “Taking") then, in any such event, the term hereby granted shall cease and come to an end as of the date of the vesting of title in such public authority, or when possession is given to such public authority, whichever event last occurs. Upon such occurrence, the rent shall be apportioned as of such date and any prepaid rent shall be returned to the Tenant.

b. Partial Taking. If, during the term of this Lease, a portion, but not all of the Premises or any access to the Premises shall be subject to a Taking and such partial Taking shall render the remainder unsuitable for the continued operation of Tenant’s business, in Tenant’s reasonable judgment, then

Tenant may terminate this Lease effective as of the date of the Taking and the rent and all other charges for the unexpired term of the Lease shall be abated in full. In the event of such a termination, all rent and other charges shall be adjusted, prorated and paid to the date of termination. In the event of such a partial taking and this Lease is not terminated in accordance with the foregoing, then the rent shall be equitably and fairly reduced and abated for the remainder of the term in proportion to the amount of the Premises taken, as the case may be.

13. ACCESS TO PREMISES.

a. Inspection by Landlord. Upon reasonable advance notice to Tenant, Landlord and Landlord's agents, employees and contractors shall have the right to enter upon the Premises at all reasonable hours, for the purpose of inspecting the same in a manner which will not unreasonably interfere with Tenant's use of the Premises.

b. Rental Notice. At any time within ninety (90) days prior to the expiration of this Lease, so long as Tenant shall not have exercised any renewal options available hereunder, Landlord and Landlord's agents, invitees and licensees may, upon reasonable advance notice to Tenant, enter and show the Premises to persons wishing to rent the same, provided that such entry shall be done in way to cause the least possible interference with Tenant's use and occupancy of the Premises as is reasonably possible.

14. SUBLETTING AND ASSIGNMENT.

a. Subletting. Tenant may sublet the Premises without Landlord's prior written consent, except that no sublease shall be executed which could remain in effect beyond the Primary Term or any extention thereof without the consent of the Landlord, which consent shall not be unreasonably withheld, conditioned or delayed.

b. Assignment. This Lease cannot be assigned without Landlord's prior written consent which shall not be unreasonably withheld, provided that the proposed assignee shall satisfy the conditions set out in the then current City's Incentive Applicant Vetting Policy and upon such assignment and assumption of the obligations of Tenant hereunder arising from and after the effective date of such assignment, Tenant shall be released from all liabilities and obligations arising hereunder from and after the effective date of such assignment. Landlord hereby consents to Tenant's assignment of this Lease to Slawson Investment Corporation ("Slawson").

c. Tenant Obligations. No assignment or sublease shall relieve Tenant from its obligations hereunder for the payment of rent or performance of conditions, covenants and provisions of this Lease.

15. INSOLVENCY/DEFAULT. It is understood and agreed that the occurrence of any one of the following events shall constitute an event of default of this Lease by Tenant:

a. Financial. Failure of Tenant to make any payment of rent under this Lease or other required payment under this Lease on the date when due; provided, in the event Tenant fails to timely pay its rent hereunder, Landlord shall give written notice to Tenant specifying such delinquency, and Tenant shall have ten (10) days following receipt of such notice by Landlord to cure the delinquency (it being understood that Landlord shall not be required to give written notice for any default under this subparagraph a. more than twice in any calendar year).

b. Insurance. Failure of Tenant to maintain any of the insurance coverage required to be maintained by Tenant hereunder.

c. Non-Financial. Failure of Tenant to comply with any provision of this Lease, excluding those defaults referenced in subparagraphs a. and b. above, and such failure shall continue for thirty (30) days after receipt by Tenant of written notice from Landlord specifying the nature of non-compliance by Tenant with reasonable particularity; provided, however, that if the nature of Tenant's default is such that more than thirty (30) days are reasonably required for its cure, Tenant shall not be in default if Tenant immediately commences or has commenced such cure after receipt of said notice and thereafter diligently proceeds to cure such default as soon as reasonably possible.

d. General Assignment. The making of an assignment or general arrangement for the benefit of creditors by Tenant.

e. Bankruptcy. The filing by Tenant of a petition under any section or chapter of United States Bankruptcy Code (or a similar act or code of a foreign country) or any state (or province) thereof, or the failure of the dismissal, within ninety (90) days after the filing of an involuntary petition of bankruptcy or insolvency against Tenant.

f. Receiver. The appointment of a receiver or trustee for all or substantially all the assets of Tenant under this Lease, and such receivership shall not have been terminated or stayed within ninety (90) days after such appointment.

g. Attachment. The attachment, execution or other judicial seizure of substantially all of Tenant's assets located in the Premises or of Tenant's interest in this Lease where such seizure is not discharged within sixty (60) days.

16. REMEDIES IN EVENT OF DEFAULT. It is understood and agreed that upon the occurrence of any event of default described in paragraph 15 hereof, Landlord shall have the option to do any one or more of the following without any further notice or demand:

a. Termination. Terminate the Lease in which event Landlord shall have the right to re-enter the Premises and, if Tenant fails to surrender and deliver the Premises, then Landlord shall have the right to dispossess Tenant and any occupants thereof by summary proceedings upon ten (10) days prior written notice without prejudice to any other remedy, which Landlord may have, including a suit for possession or arrearage in rent.

b. Re-Entry or Repossession. Should Landlord elect to take possession of the Premises pursuant to legal proceedings or pursuant to any notice provided for by law, it may either terminate this Lease or it may, from time to time without terminating this Lease, make such alterations and repairs as may be reasonably necessary in order to relet the Premises, and relet said Premises or any part thereof for such term or terms (which may be for a term extending beyond the term of this Lease) and at such rent or rents (including rent concessions) and upon such other terms and conditions as Landlord may reasonably deem advisable. Upon each such reletting, all rents received by Landlord from such reletting shall be applied, first, to the payment of any indebtedness other than rent due hereunder from Tenant to Landlord; second, to the payment of any reasonable costs and expenses of such reletting, including reasonable brokerage fees, reasonable attorneys' fees, the reasonable costs of such re-entry, and cost of reasonable repairs; third, to the payment of rent due and unpaid hereunder; and the residue, if any, shall be held by Landlord and applied in payment of future rent as the same may become

due and payable hereunder. If such rents received from such reletting during any month shall be less than that to be paid during that month by Tenant hereunder, Tenant shall pay any such deficiency to Landlord. Such deficiency shall be calculated and paid monthly. No such re-entry or taking possession of the Premises by Landlord shall be construed as an election on its part to terminate this Lease unless a written notice of such intention is given to Tenant or unless the termination thereof be decreed by a court of competent jurisdiction. Notwithstanding any such reletting without termination, Landlord may at any time thereafter elect to terminate this Lease for such previous breach. Should Landlord at any time terminate this Lease for any breach, then, in addition to any other remedies it may have, it may recover from Tenant all damages (but not costs associated with remodeling or alterations to the Premises) it may incur by reason of such breach, including the cost of recovering the Premises, reasonable attorneys' fees, and the present value at the time of such termination of the excess, if any, of the amount of rent and charges equivalent to rent reserved in this Lease for the remainder of the stated term over the fair market rental value of the Premises for the unexpired term of this Lease, all of which amounts shall be immediately due and payable from Tenant to Landlord. For purposes of this paragraph 15. b., "present value" shall be computed by discounting the applicable amount to present value at a discount rate equal to one percentage point above the discount rate then in effect at the Federal Reserve Bank nearest to the location of the Premises.

A waiver by either party hereto of a breach or default by the other under the terms and conditions of this Lease shall not be construed to be a waiver of any subsequent breach or default or of any other term or condition of this Lease, and the failure of such non-defaulting party to assert any breach or to declare a default by the other party shall not be construed to constitute a waiver thereof so long as such breach or default continues unremedied.

c. Damages. Landlord may periodically sue to recover damages during the period corresponding to the remainder of the term of this Lease, and no action for damages shall bar a later action for damages subsequently occurring.

d. Cumulative Remedies. The remedies as set forth and available to Landlord because of the default of Tenant, shall be in addition to and shall not exclude any other remedy available to Landlord under this Lease or applicable law and equity.

e. No Accord or Satisfaction. No payment by the Tenant or receipt by the Landlord of a lesser amount than the rent stipulated in this Lease shall be deemed other than a payment on account of the earliest rent due, nor shall any endorsement or statement on any check or on any letter accompanying any check or payment as rent be deemed an accord and satisfaction, and the Landlord may accept such check or payment without prejudice to its right to recover the balance of the rent or to pursue any other remedy provided for in this Lease.

17. MISCELLANEOUS.

a. Relationship of the Parties. Nothing contained herein shall be deemed or construed by the parties hereto, or by any third party, as creating the relationship principal and agent or of a partnership or joint venture between the parties hereto, it being understood and agreed that neither the method of computation of rent no any other provision contained herein, nor any acts of the parties hereto shall be deemed to create any relationship between the parties other than the relationship of Landlord and Tenant.

b. Binding Effect of Lease. The covenant, agreements and obligations herein contained, except otherwise specifically provided, shall extend to and bind and inure to the benefit of the parties hereto and their respective personal representatives heirs, legatees, successors, trustees, and assigns. Tenant shall not assign and transfer this Lease without Landlord's prior written consent.

c. Entire Agreement. This instrument contains the entire agreement of the parties hereto and no modification shall be effective unless evidenced by a subsequent duly executed written agreement.

d. Remedies Cumulative. No remedy herein conferred upon or reserved to Landlord or Tenant shall exclude any other remedy herein or by law provided, but each shall be cumulative and in addition to every other remedy given hereunder or now or hereafter existing at law or in equity.

e. Memorandum of Lease. This Lease shall not be recorded but it is agreed that, upon request by either party, the parties will execute a memorandum of lease which may be recorded by either party.

f. Headings. The paragraph headings of this Lease are inserted only for reference and in no way define, limit, or described the scope or intent of this Lease nor affect its terms and provisions.

g. Termination. Upon termination of this Lease, whether by expiration of the term or otherwise, Tenant shall peaceably yield unto Landlord the Premises.

h. Governing Law. This Lease shall be governed exclusively by the provisions hereof and by the laws of the State of Kansas.

i. Definition of Terms. Wherever herein the singular number is used, the same shall include the plural, and the masculine gender shall include the feminine and neuter genders.

j. Time of the Essence. Time is of the essence in all provisions of this Lease.

k. Waivers. One or more waivers of any breach of a covenant, condition, rule or regulation by Landlord or Tenant shall not be construed as a waiver of any further breach of the same.

l. Estoppel Certificate; Nondisturbance Agreement. Landlord and Tenant shall execute and deliver to the other, within thirty (30) days after written request from either, a written certificate stating, if true, that as of the date of such certificate: (1) the Lease is in full force and effect and has not been assigned, modified or amended (or, if it has, then specifying the dates and terms of any such assignment or amendment), (2) the Lease constitutes the full agreement between the parties, (3) Landlord or Tenant (as applicable) is not in default under the Lease and the other party to the Lease is not in default to the knowledge of the party making such statement or, if such is not the case, stating the nature of the default, (4) the dates to which fixed rent has been paid, (5) the commencement date, the expiration date and whether any option to renew has been exercised, and (6) such other reasonable matters as the requesting party may desire. In order for Tenant to sublease portions of the Premises, some subtenants will require a nondisturbance agreement from the City. Promptly, upon Tenant's request, the City shall execute and deliver to Tenant, or a prospective subtenant, an agreement by the City to not disturb the subtenancy arrangement, or possession of the subleased portion of the Premises by the subtenant, so long as the subtenant complies with its obligations under the sublease, subject to applicable cure time, all on commercially reasonably terms, and the subtenancy has been created in compliance with Paragraph 14 (a) of this Lease.

18. ENVIRONMENTAL MATTERS. To the best of Landlord's knowledge, other than ground water pollution, there are no "Hazardous Materials" (such term shall include, without limitation, substances which are flammable, explosive, corrosive, radioactive, toxic, petroleum and petroleum products and any substances defined as hazardous substances, hazardous materials, toxic substances, or hazardous wastes in the federal Comprehensive Environmental Response Compensation and Liability Act of 1980, the Federal Hazardous Materials transportation Act, the Resource Conservation and Recovery Act, any similar state laws, all amendments to these laws and regulations adopted or publications promulgated pursuant to these laws) presently located in, on, or under the Premises including, without limitation, the subsurface soils and groundwater, have migrated to the Premises from another source, have been installed, used, generated, manufactured, stored, released, or disposed of on, under, or about the Premises by Landlord or any third person, nor has Landlord received any notice or communication regarding any alleged Hazardous Materials on or about the Premises and that the Premises is in compliance with all federal, state, and local laws, ordinances, rules and regulations relating to any such Hazardous Materials. In the event any Hazardous Materials for which Landlord is responsible (as described above) be found on the Premises during the term or any extension of the term hereof, Landlord shall bear all costs for the removal and remediation of the Hazardous Materials and shall restore the Premises to substantially the same condition as it was in immediately prior to such removal and remediation work. Landlord shall immediately notify Tenant in writing of any notice, complaint, warning, claim, report, or communication received by Landlord from any federal, state, or local governmental or regulatory agency regarding Hazardous Materials on the Premises, and provide Tenant with a copy of the same within ten (10) days of Landlord's receipt thereof.

Landlord agrees to indemnify and hold Tenant harmless from and against all claims, demands, losses, damages, clean-up costs, liabilities or judgments imposed against Tenant, including all interest, penalties, fines and other sanctions, any costs or expenses in connection therewith, including reasonable attorneys' fees, to the extent the same arise out of, or in connection with, any Hazardous Materials currently located in, on or under the Premises. Tenant agrees to indemnify and hold Landlord harmless from and against all claims, demands, losses, damages, clean-up costs, liabilities or judgments against Landlord, including all interest, penalties, fines and other sanctions, any costs or expenses in connection therewith, to the extent the same arise out of, or in connection with, any Hazardous Materials which are hereafter released in, on or under the Premises by Tenant or any subtenant thereof.

19. CITY MANAGER. The City Manager for the City shall be the representative of the City for all purposes under this Lease, and the Tenant may rely upon the decisions and directions of the City Manager. The City Manager may, at his or her sole discretion, submit any requested approvals to the City Council.

[Signature page follows.]

IN WITNESS WHEREOF, the parties herein have caused this agreement to be executed by their signatures below and the initialing of each page hereof.

"LANDLORD"

THE CITY OF WICHITA

By: _____
Carl Brewer, Mayor

"CITY"

ATTEST:

By: _____
Karen Sublett, City Clerk

APPROVED AS TO FORM:

By: _____
Gary E. Rebenstorf
City Attorney

"TENANT"

DOUGLAS PLACE, LLC,
a Kansas Limited Liability Company

By: _____
David C. Burk, Manager

"DOUGLAS PLACE"

EXHIBIT A

Real Property

EXHIBIT B

Premises

Drawing

EXHIBIT C

Landlord's Work

Construction of the Parking Structure and Parking Structure Retail Space pursuant to the Development Agreement between the Landlord, Tenant and Slawson Investment Corporation.

Landlord, at its sole cost and expense, shall incorporate in the construction of the Leased Premises the following items, the location of which shall be mutually agreed upon by Landlord and Tenant and incorporated into construction drawings prepared by Landlord, and approved in writing by Tenant.

1. **STORE FRONT**: Architecturally distinctive storefront in character with the Parking Garage, with aluminum, glass and glazing store front system, four 3' – 0" X 7' – 0" aluminum and glass doors. Glazing to be ¼ clear glass and tempered glass where required by Code.
2. **INTERIOR FINISHES**:
   a) **Floor**: 4" inch reinforced concrete slab on grade – 3000 PSI.
   b) **Water**: 2 1/2" waterline with service to each demised space and 3 water meters.
   c) **Sewer**: 4" sewer line with service to each demised space and a 2,400 gallon grease trap.
   d) **Demising Walls**: Three, 6 inch 25 gage metal studs at 2' – 0" on center with 5/8 firecode gypsum board each side to deck. Taped sanded and ready for paint. Sealed to deck with U.S.G. Firesafing insulation.
   e) **Ceiling**: 2' x 4' S.A.T. (Suspended acoustical tile) in exposed white grid system, mounted at 10' – 0" A.F.F.
   f) **Light Fixtures**: Landlord will provide and install (1) standard 2' x 4' four (4) F32T8EB lamp fluorescent light fixtures in each eighty (80) square feet of leased area. Landlord will provide one (1) lamp fixture in each toilet room and exit lights as required by code.
   g) **Toilets**: Landlord will construct up to five (5) ADA Accessible toilet rooms within the rear seven (7) feet of the Leased Premises, each complete with one (1) tank type elongated water closet with open front seat, one (1) wall hung vitreous china lavatory with chrome single lever faucet set, one tankless electric water heater and one (1) 18" x 24" mirror. Landlord will also provide one (1) 120V electric exhaust fan per toilet room. Piping per local codes. The walls will have FRP wainscoating per code. Walls above the wainscoat will be taped, sanded and ready for paint. The flooring shall be standard VCT.
   h) **Heating and Air Conditioning**: Individual self-contained units sized at one (1) ton for each 300 square feet of leased area. System will utilize natural gas for heating and electric air conditioning. System shall be designed in accordance with current ASHRAE Fundamentals Handbook and the ASHRAE Energy Code.
   i) **Rear door**: Four (4) standard 3' –0" x 7' x 0" hollow metal doors in a hollow metal frame, painted. Locations to be determined by Tenant.
   j) **Electrical Service**: Landlord will provide four (4) separate electrical services to the leased premises at locations to be determined by Tenant. Service entrance size will be 100 amp for spaces to 1,000 square feet in area, 200 amps for spaces from 1,000 square feet to 4,000 square feet and sized at the rate of 20 watts/square foot for space over 4,000 square feet in area. Service voltage will be 120/208 volt, 3 phase, 4 wire.
   k) **Electrical Outlets**: One 120 volt duplex, 20 amp receptacle will be provided at ten (10) feet on center at the perimeter of each of five possible demised spaces.
   l) **Phone conduit** with pull wire to each demised space.

EXHIBIT D

Prohibited Activities

The following is a list of Prohibited Activities:

- Adult Book and Video Stores
- Community Correction Facilities
- Half-way Houses
- Drug or Alcohol Rehabilitation Facilities
- New or Used Car Lots
- Multi-game, Casino-style Gambling Facilities
- Commercial Billboards

Exhibit "8"

PARKING AGREEMENT

This Parking Agreement ("Agreement") is executed this ___ day of _____, 20___, by and between The City of Wichita ("City") and Slawson Investment Corporation, a Kansas corporation ("Slawson").

1. Slawson (sometimes, "Owner") is the owner of the land and building at the southeastern corner of the intersection of Broadway Avenue and South Broadway Avenue, Wichita, Kansas, having a street address of 102 S. Broadway, Wichita, Kansas 67202 ("Slawson Property"). The building on the Slawson Property shall be used for restaurant, retail, office or other uses from time to time. Additionally, it is anticipated that Slawson will be the assignee to the original Tenant of the Parking Structure Retail Lease with the City concerning certain premises described therein (the "PS Lease"), which will be located on the southern ground level of a multi-story parking building to be owned, constructed and operated by the City on land immediately east of the Slawson Property (the "Parking Building"). The City shall diligently pursue completion of the Parking Building so that it is completed on or prior to December 14, 2012.

2. The City shall lease to Owner, for use by Owner, and its occupants, subleases, invitees and licensees, 100 parking stalls (such number of stalls as increased or decreased by Owner pursuant to this Agreement are hereafter referred to as the "Leased Stalls") within the Parking Building during the term hereof. The Parking Building shall be constructed and operated to allow automated access/departure and tracking of the users of the Leased Stalls, and for other parking stalls leased pursuant to other agreements with the City. The parking stalls reserved hereunder may be used on a come and go basis with guaranteed availability from 8:00 a.m. to 5:00 p.m. local time Monday through Friday during the term hereof. Upon a minimum of thirty (30) days prior written notice given to the City by Owner, Owner shall have the right to reduce number of Lease Stalls below 100 parking stalls, and once reduced below 100 parking stalls, to further increase or decrease the number of Leased Stalls from time to time; provided, at no time shall the number of Lease Stalls exceed 100 unless otherwise agreed by the parties hereto in writing.

3. The term of this Agreement shall extend from the thirty-first (31st) day following the date that the Owner notifies the City that Owner, or its tenants or occupants, have a need to use the Leased Stalls ("Commencement Date") and for a ten (10) year period thereafter; provided, if the Commencement Date shall be a day other than the first day of a calendar month, the term hereto shall extend for ten (10) years following the first day of the immediately following calendar month. The term hereof will renew automatically thereafter, up to an additional forty (40) years, unless and until terminated by the Owner at any time upon a minimum of sixty (60) days prior written notice given to the City.

4. The Owner shall pay a parking fee ("Fee") to the City during the term hereof following the Commencement Date. During the initial approximately ten (10) year period following the Commencement Date, the Fee for each full calendar month shall be Thirty Dollars ($30.00) for each of the Leased Stalls payable on or before the fifth (5th) day of each calendar month following the Commencement Date; provided, the Fee for any partial month during the term hereof shall be prorated.

During the term thereof following the expiration of the initial approximately ten (10) year period, the Fee for each of the Leased Stalls shall be adjusted for each lease year thereafter during the term hereof to a monthly amount equal to the lesser of either (a) the amount generally charged by the City for monthly rental of a parking stall in the City owned "State Parking Garage" located at the northwest corner of South Topeka Avenue and East William Street; or (b) the median monthly rate charged for each parking stall

leased within the distance of one-fourth (1/4) of a mile from the Parking Building; provided, notwithstanding the provisions of subparagraphs (a) and (b), the increase in the Fee for any lease year shall not exceed three percent (3%).

In the event the Owner fails to pay the Fee on the date it is due hereunder, the City shall notify the Owner in writing of such failure. In the event the Owner then fails to pay the applicable Fee in full within ten (10) days following receipt of such notice of delinquency from the City, the unpaid Fee shall accrue interest at the rate of twelve percent (12%) per annum until the delinquent Fee and accrued interest are paid in full to the City.

5. Following the Commencement Date and during the term thereof, the Owner agrees to remove any trash, weeds and debris from the sidewalks, adjacent to the Slawson Property.

6. In addition to and as a complete alternative to all other remedies that the City may be entitled to under the law, the Owner agrees that all sums to be paid hereunder, when delinquent beyond any notice and cure time required hereunder, may be certified by the Clerk of the City to the County Clerk of Sedgwick County, Kansas, to be placed on the tax roll for collection, subject to the same penalties and to be collected in like manner as other taxes, and such sums shall, thereafter, constitute a lien upon the Slawson Property.

7. This Agreement shall be a covenant running for the term thereof with the Slawson Property and the Parking Building, and this instrument may be filed of record with the Register of Deeds of Sedgwick County, Kansas.

8. From and after the Commencement Date, the City shall maintain, repair and replace the Parking Building, and the systems and components thereof in good operating condition and appearance throughout the term of this Agreement, including, but not limited to, the automated access/departure and tracking equipment which is a part thereof.

9. Miscellaneous:

A. This Agreement constitutes the entire understanding between the parties hereto on the subject matter hereof, and there are no agreements, understandings, warranties or representations between the parties hereto on the subject matter hereof except as set forth herein. This Agreement cannot be amended except in writing executed by the City and Owner.

B. This Agreement will inure to the benefit of and bind the respective successors and assigns of the parties hereto.

C. This Agreement has been executed by the parties on the dates set forth below their respective signatures.

D. This Agreement is to be governed by the laws of the State of Kansas.

E. Slawson and any subsequent Owner may not assign its rights and obligations except in connection with the sale of all or a portion of the Slawson Property or to any assignee of PS Lease without the prior consent of City. Upon any assignment hereof by any Owner of the Slawson Property, then the assignor's liabilities and obligations hereunder for the period from and after the date of such assignment shall be binding upon assignee and the assignor shall be released automatically from any further liabilities and obligations arising for the period from and after the effective date of such assignment. Nothing herein shall be construed to prohibit an Owner, or

require an Owner to obtain consent from the City, from, or in connection with, the Owner's authorization of a licensee, lessee or other authorized operator of the Slawson Property, or the PS Lease, or any part thereof, and the invitees and licensees of such licensees, lessees or authorized operators, from using the Leased Stalls leased in the Parking Building pursuant to this Agreement.

G. Any notice pursuant hereto shall be given in writing by (i) personal delivery, or (ii) nationally recognized overnight delivery service with proof of delivery, or (iii) United States Mail, postage prepaid, registered or certified mail, return receipt requested, sent to the intended addressee at the address set forth beneath the signatures below (or such other address as either party shall hereafter designate by at least ten (10) days advance written notice to the other party), and shall be deemed to have been given either at the time of personal delivery or, in the case of expedited delivery service or mail, as of the date of first attempted delivery at the address. Any such notices may be under the signature of either party (as the case may be) by such party's agent, attorney, or representative.

F. If any term or provision of this Agreement or the application thereof to any person or circumstance shall, to any extent, be invalid or unenforceable, the remainder of this Agreement, or the application of such term or provision to persons or circumstances other than those as to which it is held invalid or unenforceable, shall not be affected thereby, and each such term and provision of this Agreement shall be valid and be enforced to the fullest extent permitted by law.

[Signature Pages follow.]

IN WITNESS WHEREOF, the parties have hereunto set their hands as of the day and year aforesaid.

THE CITY OF WICHITA

By: _____
Carl Brewer, Mayor

"CITY"

ATTEST:

By: _____
_____, City Clerk

Address for Notice Purposes:

City of Wichita
455 N. Main, 13th Floor
Wichita, KS 67202
Attn: City Manager

APPROVED AS TO FORM:

By: _____
Gary E. Rebenstorf
City Attorney
_____, 2011

STATE OF KANSAS)
)ss:
COUNTY OF SEDGWICK)

BE IT REMEMBERED, that on this ___ day of _____, 20__, before me a Notary Public in and for the County and State aforesaid, personally appeared Carl Brewer, the Mayor of The City of Wichita, a municipal corporation, personally known to me to be such officer and the same person who executed, as such officer, the above and foregoing instrument in writing on behalf of said corporation and such person duly acknowledged the execution of the same to be the act and deed of said corporation.

IN WITNESS WHEREOF, I have hereunto set my hand and official seal the day and year last above written.

_____
NOTARY PUBLIC

My Appointment Expires:

SLAWSON INVESTMENT CORPORATION,
a Kansas corporation

By: _____
Name: _____
Time: _____

"SLAWSON "

Address for Notice Purposes:

Jerry Jones
Slawson Investment Corporation
727 N. Waco Avenue, Suite 400
Wichita, Kansas 67203

STATE OF KANSAS)
)ss:
COUNTY OF SEDGWICK)

BE IT REMEMBERED, that on this ___ day of _____, 20__, before me a Notary Public in and for the County and State aforesaid, personally appeared_____, the _____ of Slawson Investment Corporation, a Kansas corporation, personally known to me to be such officer, and the same person who executed, as such officer, the above and foregoing instrument in writing on behalf of said corporation and such person duly acknowledged the execution of the same to be the act and deed of said corporation.

IN WITNESS WHEREOF, I have hereunto set my hand and official seal the day and year last above written.

_____
NOTARY PUBLIC

My Appointment Expires:

City of Wichita
City Council Meeting
September 13, 2011

TO: Mayor and City Council

SUBJECT: Public Hearing on the Water & Sewer Cost of Service Analysis

INITIATED BY: Public Works & Utilities Department

AGENDA: New Business

Recommendation: Close the public hearing.

Background: The City Council approved a contract with Raftelis Financial Consultants on December 7, 2010 to conduct a cost of service analysis of the water and sewer systems. The study analyzed usage trends, customer classes, and infrastructure maintenance needs to develop a long-term financial plan and necessary revenue increases. Recommendations for water and sewer rate changes were assessed by the Water Utilities Advisory Committee – comprising business and community representatives – at two meetings this summer. The recommended changes were presented to the City Council during the August 23, 2011 workshop, at which time the City Council requested citizen input prior to determining how to proceed with the rates.

Analysis: The cost of service analysis determined that rate increases are needed each year through 2021 to support infrastructure maintenance, system replacement, needed expansion of the supply and treatment capacity, and compliance with regulatory requirements.

The study also identified the costs incurred to serve each customer class. Under the current structure, residential customers pay more than the costs they create, while commercial and wholesale customers pay less. An average residential customer pays $2.05 more on each monthly bill than what is necessary to cover the costs of service. This extra revenue covers the lower charges assessed to commercial and residential customers. The consultant recommends a gradual phase-in of rate equity designed to equalize the rates between customer classes, aligning the amounts that customers pay with the cost of service.

The Water Utilities Advisory Committee analyzed the consultant's findings and recommendations. It concluded that additional revenue was necessary but that across-the-board increases in 2012 are preferable to the cost-based approach identified by the consultant.

Citizen input will assist in determining whether the enhanced revenue should come from across-the-board increases or if the current imbalance should be gradually phased out, beginning with cost-based rate structure changes in 2012.

Financial Considerations: The public hearing will have no financial impact on the City. Any changes to the water and sewer rates would be enacted at a future meeting.

Goal Impact: Changes to the water and sewer rate structure protect the region's investment in the utility's infrastructure and position Wichita to be a growing, sustainable community.

Legal Considerations: The Law Department has determined that the multiple modalities of public input which have now been provided offer a sufficient basis from which Council may direct its future decision.

Recommendations/Actions: It is recommended that the City Council close the public hearing.

Attachments: None.

City of Wichita
City Council Meeting
September 13, 2011

TO: Mayor and City Council

SUBJECT: Old Town Anniversary Celebration Memorandum of Understanding

INITIATED BY: Division of Arts & Cultural Services

AGENDA: New Business

Recommendation: Approve the Memorandum of Understanding (MOU) between the City of Wichita (City) and Wichita Downtown Development Corporation (WDDC) to approve in-kind services in the amount not to exceed $5,000.

Background: The WDDC and the City of Wichita in cooperation and partnership wish to produce an Old Town Anniversary birthday celebration.

Analysis: The City is committed to collaborate with WDDC to produce the Old Town Anniversary birthday celebration. To ensure the terms and conditions of the community event ordinance do not negatively impact or cause WDDC to incur additional expenses, the City has drafted an MOU that clearly delineates the rights and obligations of each party and defines the respective roles for the anniversary celebration.

The MOU addresses security and police staffing as well as in-kind services to be provided by the City and reporting responsibilities of WDDC within 90 days upon completion of the event. The term of this MOU is for a period of one (1) year.

Financial Consideration: City sponsorship is not to exceed $5,000 for in-kind services.

Goal Impact: This project impacts the Quality of Life by producing the Old Town Anniversary as a unique community celebration.

Legal Consideration: The Law Department reviewed and approved the Memorandum of Understanding as to form.

Recommendations/Actions: It is recommended that the City Council approve the Memorandum of Understanding between the City of Wichita and Wichita Downtown Development Corporation to approve in-kind services in the amount not to exceed $5,000.

Attachment: Memorandum of Understanding

MEMORANDUM OF UNDERSTANDING

THIS MEMORANDUM OF UNDERSTANDING (the "MOU") is entered into this ___ day of _____, 2011, between Wichita Downtown Development Corporation, a corporation existing under the laws of the State of Kansas ("WDDC") and the City of Wichita, Kansas (the "City") to memorialize the agreement of the parties concerning their relationship for the purpose of conducting the 2011 The Anniversary of Old Town.

Recitals

WHEREAS, WDDC is organizing, promoting and conducting The Anniversary of Old Town as a unique event and community celebration;

WHEREAS, it is the intent of the City of Wichita and Wichita Downtown Development Corporation to work in cooperation and partnership with the each other to produce The Anniversary of Old Town; and

WHEREAS, the City of Wichita seeks to support The Anniversary of Old Town, and WDDC and the City enter into this MOU that delineates the respective rights and obligations of the parties and defines their relationship for The Anniversary of Old Town.

Agreement

NOW THEREFORE, for these reasons, and in consideration of the conditions, covenants and agreements set forth below, WDDC and the City agree as follows:

1. RELATIONSHIP BETWEEN THE PARTIES

The parties agree that the relationship of the parties is between two separate and independent entities. There is not a joint venture, partnership, employer-employee relationship or any principal-agent relationship.

2. SECURITY FOR THE ANNIVERSARY OF OLD TOWN

WDDC shall be responsible, according to Section 3.11.060 of the Code of the City of Wichita, to pay the police staffing costs for event specific assignments for The Anniversary of Old Town. All security and police staffing, as may be required, is to be provided by certified law enforcement officers or other licensed and certified private security personnel.

WDDC will contract with Wichita Police Department officers to fill the required security positions as required by the Chief of Police through the WPD special operations/special events coordinator. WDDC will pay Wichita Police Department officers at the special event rate of $30 per hour or an amount agreed upon between WDDC and the individual officer. In the event sufficient numbers of Wichita Police Department officers do not sign up to fill the required positions, security staffing may be obtained by employing licensed and certified private security personnel and certified law enforcement from other jurisdictions, as approved by the City through the Wichita Police Department. Officers hired by WDDC shall be considered contract employees of WDDC. Wichita Police

Department Officers hired for The Anniversary of Old Town shall be entitled to workers compensation coverage provided by the City of Wichita.

The City of Wichita agrees to pay for extraordinary police services which exceed the requirements set forth above and are deemed necessary by the Chief of Police. Such services include, but are not limited to: mounted patrol officers, bomb squad, SCAT and SWAT officers and officers required for the operation of the command center. The Wichita Police Department will work in cooperation with WDDC to define which of the above groups represent necessary safety components for use during The Anniversary of Old Town.

3. IN KIND SERVICES FOR THE ANNIVERSARY OF OLD TOWN

The City agrees to provide in kind services to WDDC in an amount not to exceed $5000.00 (the "City In Kind Contribution"). Such in kind services are those additional services and items required specifically for The Anniversary of Old Town, and which the City would not provide in the absence of The Anniversary of Old Town. Such in kind services include, but are not limited to: additional street sweeping, additional trash removal, barricading and the removal of such barricades for streets and public parking lots for various events, use of the portable stage, use of available City picnic tables (not to exceed fifty) , use of City portable bleachers, use of plazas facilities, space and parking, and other similar services.

A meeting shall be held between representatives of WDDC and the City departments impacted by The Anniversary of Old Town, to outline the in kind services requested by WDDC and those deemed necessary by the City in preparation and execution of The Anniversary of Old Town. Requests for the set up, use and delivery of picnic tables, portable bleachers and the portable stage shall be finalized with the Director of Park and Recreation, or his designee, no later than thirty days prior to the start of the festival. The City shall determine the value of the City In Kind Contribution by utilizing the salary costs associated with City staff, equipment costs, the rental value of items such as the stage, tables and barricades and any additional actual costs incurred by the City.

4. REPORTS & ACCOUNTING

Within 90 days after the completion of The Anniversary of Old Town, the City shall provide WDDC with a report and accounting that sets forth and itemizes the City's determination of the value of the City In Kind Contribution as described in Section 3 above. The parties agree that they will cooperate with each to provide information and documents that either party may request with regard to the parties' obligations under Sections 3 and 4 above.

5. APPLICATION PROCESS

WDDC shall be responsible for payment of the multiple day community event permit fee, $1,000.00 as set forth by the city code and all other licensing fees which may be applicable to specific events conducted by WDDC. All proposed activities and license applications must be submitted by WDDC for approval by the City of Wichita, no later than forty-five (45) days prior to the event.

6. COMPLIANCE WITH AMERICANS WITH DISABILITIES ACT

WDDC and the City agree that they have a joint obligation to comply with the Americans with Disabilities Act. (ADA). WDDC and the City agree that they have the obligation to consider the accommodation request(s) from qualified disabled individuals. WDDC will ensure, to the full extent required by the ADA, that qualified individuals with disabilities receive equitable access to the programs and activities provided by WDDC.

7. INDEMNIFICATION

The parties agree to indemnify and hold harmless the other party, its governing board, officers, agents, and employees against any and all claims, damage, liability, injury expense, demands, causes of actions, judgments including court costs and attorney's fees arising out of or resulting from the negligence or intentional acts of its officers, agents or employees. In the event such loss is proximately caused by the acts of parties and their officers, agents or employees, each shall be responsible for its proportionate share of claimant's damages under the law of the state of Kansas. Provided, however, that such indemnification shall not be required to the extent that the City has a defense against or limitation of its liability under the Kansas Tort Claims Act.

The parties agree this provision shall survive the termination of this MOU.

8. GOVERNING LAW

The parties agree that the law of the state of Kansas shall govern this MOU, and that any suit or cause of action by either party against the other shall be filed in the Eighteenth Judicial District of the State of Kansas.

9. COMPLETE AGREEMENT

The parties agree that this MOU constitutes the entire agreement of the parties and that no prior agreement or representation, written or oral, shall be binding or of any force or effect. Further, this MOU may not be amended, modified, altered or enlarged except in writing signed by the duly authorized representatives of the parties hereto.

10. AGREEMENT BINDING

The parties agree that this MOU shall be binding upon the successors and legal representatives of the parties hereto. Neither party shall assign this MOU or any of their respective rights, obligations or interest in it.

11. TERM

The term of this MOU will be for one (1) years from the date of the parties' execution and that the term of the MOU shall not be extended. Such notice shall be given as provided for by Section 13 below.

12. NOTICES

All notices with respect to this MOU shall be given by first class mail or hand-delivery to the parties as follows:

City:	WDDC:
Carl Brewer, Mayor, City of Wichita 455 N. Main, 13th Floor Wichita, Kansas 67202	Jeff Fluhr, President 507 E. Douglas Wichita, Kansas 67202

13. SEVERABILITY

If any term, provision, covenant or condition of this MOU is ruled invalid, void, or unenforceable by a court of competent jurisdiction, this MOU will nonetheless remain in full force and effect as to all remaining terms, provisions, covenants and conditions.

IN WITNESS HEREOF, the duly authorized representatives of the parties have hereunto set their hand on the date and year written.

City of Wichita

By: _____
Mayor, City of Wichita

Date: _____

Wichita Downtown Development Corporation

By:_____
Jeff Fluhr, President

Date:_____

City of Wichita
City Council Meeting
September 13, 2011

TO: Mayor and City Council

SUBJECT: Ordinances Amending City Code Sections 2.05.010 and 2.05.020, Concerning Master Written Undertaking for GO Bond and Note Sales, and Repealing Prior Ordinances No. 48-900 and 48-901

INITIATED BY: Law Department

AGENDA: New Business

Recommendation: Approve the attached Ordinances to amend City Code Sections 2.05.010 and 2.05.020 and repeal prior Ordinances No. 48-900 and No. 48-901.

Background: In 1994, the federal Securities and Exchange Commission ("SEC") approved amendments to its Rule 15c2-12 (the "Rule"), which regulates the conduct of underwriters in connection with the offering and sale of municipal securities, such as the City's general obligation bonds and notes.
The Rule also requires underwriters to obtain certain written commitments from the issuers of bonds and notes to provide disclosure on an ongoing basis about the issuer and the bonds and notes being sold by the issuer as long as the bonds or notes are outstanding.

In response to the 1994 amendments, the City Council enacted City Code Sections 2.05.010 and 2.05.020, to create the required commitment to provide the ongoing disclosure for bonds and notes. This commitment, for example, requires the City file, in the manner specified in the Rule, its audited financial statement annually and to provide notice of certain events such as the redemption of bonds or notes, failure to make a principal or interest payment on bonds or notes, etc.

In July of 2009, the City Council approved additional amendments to meet changes to the Rule requiring the disclosure to be provided in an electronic format.

The SEC again amended the Rule in 2010, which added new items to the list of events that are required to be disclosed, eliminated the "materiality" requirement for certain events and required notices to be filed within 10 business days of the event to which they pertain.

Analysis: It has been determined that additional amendments to the City's Ordinances are required to ensure strict compliance with the "materiality" requirements of the Rule and to provide minor clarification of the language in Ordinances No. 48-900 and No. 48-901.

Goal Impact: This item impacts the Economic Vitality/Affordable Living and Internal Perspective Goals through the temporary and permanent financing of capital improvements and offering the City's debt obligations through competitive sale.

Financial Considerations: There are no financial considerations in relation to these Ordinance revisions.

Legal Considerations: The Ordinances have been prepared by Bond Counsel and approved as to form by the Law Department.

Recommendations/Actions: It is recommended that the Council: (1) adopt the attached Ordinances to amend City Code Sections 2.05.010 and 2.05.020 and authorize their publication and repeal prior Ordinances No. 48-900 and No. 48-901; and (2) find and declare, upon the request of the Mayor, that a public emergency exists, requiring the final passage of the Ordinances on the date of their introduction.

Attachments: Request for Declaration of Emergency
Ordinance Amending City Code Section 2.05.010
Delineated Copy
Ordinance Amending City Code Section 2.05.020
Delineated Copy

PUBLISHED IN THE WICHITA EAGLE ON SEPTEMBER 16, 2011

ORDINANCE NO. 49-077

AN ORDINANCE AMENDING SECTION 2.05.010 OF THE CODE OF THE CITY OF WICHITA, KANSAS, RELATING TO A MASTER UNDERTAKING TO PROVIDE ONGOING DISCLOSURE IN CONNECTION WITH GENERAL OBLIGATION BONDS ISSUED BY THE CITY OF WICHITA, KANSAS, FOR DISTRIBUTION IN PUBLIC OFFERINGS.

BE IT ORDAINED BY THE GOVERNING BODY OF THE CITY OF WICHITA, KANSAS:

SECTION 1. Section 2.05.010 of the Code of the City of Wichita shall read as follows:

2.05.010 Undertaking to Provide Ongoing Disclosure in Connection with City of Wichita General Obligation Bonds Issued for Distribution Through Public Offering.

(a) This Section 2.05.010 establishes and constitutes a written undertaking which shall function as a master undertaking for the benefit of the holders as well as the beneficial owners of all general obligation bonds issued by the City of Wichita purchased for public distribution by one or more underwriters, on or after July 3, 1995 (the "Bonds"), as required to establish legal preconditions for sale of the Bonds through an underwriter or underwriters, under Section (b)(5)(i) of Securities and Exchange Commission ("SEC") Rule 15c2-12 (the "Rule") promulgated under the Securities Exchange Act of 1934, as amended.

(b) This Subsection (b) of Section 2.05.010 shall apply to all Bonds issued on or between July 3, 1995, and June 30, 2009.

(1) The City of Wichita, as issuer of the Bonds (the "Issuer") undertakes to provide the following information, at the times and to the recipients as provided in this Section 2.05.010(b):

(i) Annual Financial Information;

(ii) Audited Financial Statements; and,

(iii) Material Event Notices.

(2) So long as the Rule continues to require an undertaking to make ongoing disclosure as established herein, or performance of prior such undertakings, then, with respect to all of the Bonds issued subject to such requirements which remain Outstanding:

(i) The Issuer shall provide the Annual Financial Information on or before December 31 of each year (the "Report Date"), beginning in December 1996, to each then existing NRMSIR and the SID, if any. The Issuer may adjust the Report Date if the Issuer changes its fiscal year by providing written notice of the change of fiscal year and the new Report Date to each then existing NRMSIR and the SID, if any; provided that the new Report Date shall be not more than 365 days after the end of the new fiscal year and provided further that the final Report Date relating to the former fiscal year and the initial Report Date relating to the new fiscal year shall not exceed one year in duration. It shall be sufficient if the Issuer provides to each then existing NRMSIR and the SID, if any, the Annual Financial Information by specific reference to documents previously provided to

each NRMSIR and the SID, if any, or filed with the Securities and Exchange Commission and, if such a document is a final official statement within the meaning of the Rule, available from the Municipal Securities Rulemaking Board ("MSRB"). The Issuer shall also provide to each NRMSIR and the SID, if any, copies of each final official statement (within the meaning of the Rule) which is produced on or after July 3, 1995, in connection with the offering of any of the Bonds, within 60 days after such official statement is finalized for distribution by the underwriter.

(ii) The Issuer shall provide the Audited Financial Statements as part of the Annual Financial Information described in the preceding paragraph of this subsection.

(iii) If a Material Event occurs, the Issuer shall provide a Material Event Notice in a timely manner to the MSRB and the SID, if any. Each "Material Event Notice" shall be so captioned, and shall prominently state the date, title and CUSIP numbers of the Bonds to which the Material Event(s) covered by the Material Event Notice pertain(s).

(iv) The Issuer shall provide, in a timely manner, to the MSRB and to the SID, if any, notice of any failure by the Issuer to provide Annual Financial Information on or before the Report Date to each then existing NRMSIR and the SID (if any) as required by the terms of this Section 2.05.010(b).

(3) The following are the definitions of the capitalized terms used in this Section 2.05.010(b) and not otherwise defined elsewhere in this Section 2.05.010(b):

(i) "Annual Financial Information" means the Issuer's Comprehensive Annual Financial Report ("CAFR"), presenting financial and statistical information for the previous fiscal year (prepared in accordance with the guidelines of the Government Finance Officers Association of the United States and Canada ("GFOA"), as the same may be from time to time amended), and operating data with respect to the Issuer, provided at least annually, of the type included in official statements relating to the Bonds (including some unaudited data).

(ii) "Audited Financial Statements" means the Issuer's general purpose financial statements for the previous fiscal year, prepared in accordance with generally accepted accounting principles ("GAAP") for governmental units as prescribed by the Governmental Accounting Standards Board ("GASB") (except as otherwise stated or disclosed in the notes thereto or as otherwise required by applicable law, as the same may be from time to time amended), which shall have been audited by such auditor(s) as shall be then required or permitted by applicable law.

(iii) "Material Event" means any of the following events, if material, with respect to any of the Outstanding Bonds:

(A) Principal and interest payment delinquencies;

(B) Non-payment related defaults;

(C) Unscheduled draws on debt service reserves reflecting financial difficulties;

(D) Unscheduled draws on credit enhancements reflecting financial difficulties;

(E) Substitution of credit or liquidity providers or their failure to perform;

(F) Adverse tax opinions or events affecting the tax-exempt status of the security;

(G) Modifications to rights of security holders;

(H) Bond calls;

(I) Defeasances;

(J) Release, substitution, or sale of property securing repayment of the securities;

(K) Rating changes.

(iv) "Material Event Notice" means written or electronic notice of a Material Event.

(v) "NRMSIR" means a nationally recognized municipal securities information repository, as recognized from time to time by the SEC for the purposes referred to in the Rule.

(vi) "Outstanding" when used with reference to any of the Bonds shall mean, as of a particular date, all Bonds theretofore authenticated and delivered under one or more Ordinances of the City of Wichita, except: (i) theretofore canceled by the Fiscal Agent (as defined in the Ordinance(s) authorizing the issuance of such Bonds) or delivered to such Fiscal Agent for cancellation; (ii) Bonds for which payment or redemption monies or Government Securities (as defined in the Ordinance(s) authorizing the issuance of such Bonds), or both, in the necessary amounts have been deposited with the Fiscal Agent or other such depository as provided in the Ordinance(s) authorizing the issuance of such Bonds, in trust for the Owners thereof (whether upon or prior to maturity or the Redemption Date(s) of such Bonds); or (iii) Bonds in exchange for or in lieu of which Refunding Bonds have been authenticated and delivered pursuant to the terms of (and within the meaning of) the appropriate Ordinance(s).

(vii) "Redemption Date(s)" shall mean, when used with respect to any Bond(s), the date(s) established as such in the Ordinance(s) authorizing the issuance of such Bond(s).

(viii) "SID" means a state information depository as operated or designated as such by the State of Kansas for the purposes referred to in the Rule.

(4) Unless otherwise required by law and subject to technical and economic feasibility, and to annual appropriations, the Issuer will exercise its best efforts to employ such methods of information transmission as shall be requested or recommended by the designated recipients of the Issuer's information.

(5) This Section 2.05.010(b) or any provision hereof, shall be subject to nullification and repeal in the event that the Issuer first delivers to each then existing NRMSIR and the SID, if any, an opinion of nationally recognized bond counsel to the effect that those portions of the Rule that require this Section 2.05.010(b) as a condition for particular underwriter conduct, or any such provision, are invalid, have been repealed retroactively or otherwise do not apply to the Bond. This Section 2.05.010(b) may be amended without the consent of the holders or beneficial owners of any Bond(s), following the delivery by the Issuer to each then existing NRMSIR and the SID, if any, of the proposed amendment and the opinion of nationally recognized bond counsel to the effect that such amendment, and giving effect thereto, will not adversely affect the adequacy of this Section 2.05.010(b) or the adequacy of the Issuer's subsequent conduct for purposes of compliance with the Rule, provided, however, that no such amendment will be made unless the following conditions are satisfied:

(i) The amendment may only be made in connection with a change in circumstances that arises from a change in legal requirements, change in law, or change in the identity, nature, or status of the Issuer, or type of business conducted;

(ii) The undertaking, as amended, would have complied with the requirements of the Rule at the time of any primary offering to which the undertaking applies, after taking into account any amendments or interpretations of the Rule, as well as any change in circumstances;

(iii) The amendment does not materially impair the interests of holders, as determined either by parties unaffiliated with the Issuer (such as the trustee or bond counsel) or by approving vote of holders of the Bonds pursuant to the terms of the governing instrument(s) at the time of the amendment;

(iv) If the amendment changes the type of operating data or financial information provided pursuant to the Issuer's undertaking, the Annual Financial Information containing the amended operating data or financial information will explain, in narrative form, the reasons for the amendment and the impact of the change in the type of operating data or financial information being provided; and,

(v) If the amendment alters portions of the Issuer's undertaking specifying the accounting principles to be followed in preparing financial statements, the Annual Financial Information for the year in which the change is made will present a comparison between the financial statements or information prepared on the basis of the new accounting principles and those prepared on the basis of the former accounting principles, which comparison should include a qualitative (and to the extent reasonably feasible, quantitative) discussion of the differences in the accounting principles and the impact of the change in principles on the presentation of the financial information. A notice of the change in accounting principles will be sent to the NRMSIRs or the MSRB, and the appropriate SID, if any.

(6) Any failure by the Issuer to perform in accordance with this Section 2.05.010(b) shall not constitute an "Event of Default" or "Default" within the meaning of any Ordinance(s) authorizing the issuance of any of the Bonds, and the rights and remedies provided to holders or beneficial owners of the Bonds under such Ordinance(s) upon the occurrence of such a "Default" or such an "Event of Default" shall not apply to any such failure.

(7) If any of the foregoing provisions or terms of this Section 2.05.010(b), or any application thereof, is held invalid, the invalidity shall not affect other applications of the provisions or terms of this Section 2.05.010(b) which reasonably can be given effect without the invalid provision or term or the application thereof, and to this end, the provisions of this Section 2.05.010(b) are declared to be severab1e:

(8) None of the provisions of this Section 2.05.010(b) are in any way intended to impose upon, or result in an assumption by, the City of Wichita or any of its officers, agents or employees, of any special duty or any civil law duty of care as to which any breach or alleged breach thereof could give rise to any claim for damages in tort, and the City hereby expressly disclaims any such duty or responsibility for damages, including (but not limited to) any direct, indirect, special or consequential damages. The provisions of this Section 2.05.010(b) shall not, in any way, create liability or a basis for liability on the part of the City of Wichita, Kansas or any officer or employee thereof for any damages that result from failure of the Issuer to timely perform any portion, provision, term or condition of the written undertaking on its part established herein, or for any damages that result from reliance upon any provision of this Section 2.05.010(b) or any administrative decision lawfully made thereunder. However, nothing in this subsection shall operate or be construed to limit the rights of any holder or beneficial owner of any Bond to seek enforcement of the undertakings herein expressed through proceedings for a decree of specific performance in equity.

(c) This Subsection (c) of Section 2.05.010 shall apply to all Bonds issued on or between July 17, 2009, and November 30, 2010.

(1) The following are the definitions of the capitalized terms used in this Section 2.05.010(c) and not otherwise defined elsewhere in this Section 2.05.010(c):

(i) "Annual Financial Information" means the City's Comprehensive Annual Financial Report ("CAFR"), presenting financial and statistical information for the previous fiscal year (prepared in accordance with the guidelines of the Government Finance Officers Association of the United States and Canada ("GFOA"), as the same may be from time to time amended), and operating data with respect to the City, provided at least annually, of the type included in official statements relating to the Bonds (including some unaudited data).

(ii) "Audited Financial Statements" means the City's general purpose financial statements for the previous fiscal year, prepared in accordance with GAAP for governmental units as prescribed by the GASB (except as otherwise stated or disclosed in the notes thereto or as otherwise required by applicable law, as the same may be from time to time amended), which shall have been audited by such auditor(s) as shall be then required or permitted by applicable law.

(iii) “City” means the city of Wichita, Kansas.

(iv) “EMMA” means the Electronic Municipal Market Access facility for municipal securities disclosure of the MSRB, or any other market access method approved under the Rule.

(v) “GAAP” means generally accepted accounting principles.

(vi) “GASB” means the Governmental Accounting Standards Board or its successors or assigns.

(vii) "Material Event" means any of the following events, if material, with respect to any of the Outstanding Bonds:

(A) Principal and interest payment delinquencies;

(B) Non-payment related defaults;

(C) Unscheduled draws on debt service reserves reflecting financial difficulties;

(D) Unscheduled draws on credit enhancements reflecting financial difficulties;

(E) Substitution of credit or liquidity providers or their failure to perform;

(F) Adverse tax opinions or events affecting the tax-exempt status of the security;

(G) Modifications to rights of security holders;

(H) Bond calls (other than mandatory sinking fund redemptions);

(I) Defeasances;

(J) Release, substitution, or sale of property securing repayment of the securities;

(K) Rating changes.

(viii) "Material Event Notice" means notice in Prescribed Form in accordance with EMMA of a Material Event.

(ix) "MSRB" means the Municipal Securities Rulemaking Board and any successors or assigns, or any other entities or agencies approved under the Rule.

(x) "Outstanding" when used with reference to any of the Bonds shall mean, as of a particular date, all Bonds theretofore authenticated and delivered under one or more ordinances of the City, except: (i) Bonds theretofore canceled by the fiscal agent or paying agent (as defined in the ordinance(s) authorizing the issuance of such Bonds) or delivered to such fiscal agent or paying agent for cancellation; (ii) Bonds for which payment or redemption monies or government securities (as defined in the ordinance(s) authorizing the issuance of such Bonds), or both, in the necessary amounts have been deposited with the fiscal agent or paying agent or other such depository as provided in the ordinance(s) authorizing the issuance of such Bonds, in trust for the owners thereof (whether upon or prior to maturity or the Redemption Date(s) of such Bonds); or (iii) Bonds in exchange for or in lieu of which refunding bonds have been authenticated and

delivered pursuant to the terms of (and within the meaning of) the appropriate ordinance(s).

(xi) “Prescribed Form” means such electronic format accompanied by such identifying information as shall have been prescribed by the MSRB and which shall be in effect on the date of filing of the applicable information.

(xii) "Redemption Date(s)" shall mean, when used with respect to any Bond(s), the date(s) established as such in the ordinance(s) authorizing the issuance of such Bond(s).

(xiii) “Report Date” means December 31st of each year, beginning December 31, 2009.

(2) The City, as an “obligated person” within the meaning of the Rule, undertakes to provide the following information, at the times and to the recipients as provided in this Section 2.05.010(c):

(i) Annual Financial Information;

(ii) Audited Financial Statements; and,

(iii) Material Event Notices.

(3) So long as the Rule continues to require an undertaking to make ongoing disclosure as established herein, or performance of prior such undertakings, then, with respect to all of the Bonds issued subject to such requirements which remain Outstanding:

(i) The City shall provide the Annual Financial Information in Prescribed Form in accordance with EMMA to the MSRB, on or before the Report Date. The City may adjust the Report Date if the City changes its fiscal year by providing written notice of the change of fiscal year and the new Report Date to the MSRB; provided that the new Report Date shall be six months after the end of the new fiscal year and provided further that the period between the final Report Date relating to the former fiscal year and the initial Report Date relating to the new fiscal year shall not exceed one year in duration. It shall be sufficient if the City provides to the MSRB the Annual Financial Information by specific reference to documents available to the public on the MSRB’s Internet Web site, or filed with the SEC.

(ii) If not provided as part of the Annual Financial Information, the City shall provide the Audited Financial Statements when and if available to the MSRB in Prescribed Form in accordance with EMMA.

(iii) If a Material Event occurs, the City shall file a Material Event Notice in a timely manner in Prescribed Form in accordance with EMMA with the MSRB. Each "Material Event Notice" shall be so captioned, and shall prominently state the date, title and CUSIP numbers of the Bonds to which the Material Event(s) covered by the Material Event Notice pertain(s).

(iv) The City shall provide in Prescribed Form in accordance with EMMA in a timely manner to the MSRB notice of any failure by the City to provide Annual

Financial Information on or before the Report Date to the MSRB as required by the terms of this Section 2.05.010(c).

(4) The information listed in Subsection (c)(2) shall be provided by the City to the MSRB, at www.emma.msrb.org, in the Prescribed Form or by such other method of transmitting information that is approved by the SEC.

(5) This Section 2.05.010(c) or any provision hereof, shall be subject to nullification and repeal in the event that the City first delivers to the MSRB, an opinion of nationally recognized bond counsel to the effect that those portions of the Rule that require this Section 2.05.010(c) as a condition for particular underwriter conduct, or any such provision, are invalid, have been repealed retroactively or otherwise do not apply to the Bonds. This Section 2.05.010(c) may be amended without the consent of the holders or beneficial owners of any Bond(s), following the delivery by the City to the MSRB, of the proposed amendment and the opinion of nationally recognized bond counsel to the effect that such amendment, and giving effect thereto, will not adversely affect the adequacy of this Section 2.05.010(c) or the adequacy of the City's subsequent conduct for purposes of compliance with the Rule, provided, however, that no such amendment will be made unless the following conditions are satisfied:

(i) The amendment may only be made in connection with a change in circumstances that arises from a change in legal requirements, change in law, or change in the identity, nature, or status of the City, or type of business conducted;

(ii) The undertaking, as amended, would have complied with the requirements of the Rule at the time of any primary offering to which the undertaking applies, after taking into account any amendments or interpretations of the Rule, as well as any change in circumstances;

(iii) The amendment does not materially impair the interests of holders, as determined either by parties unaffiliated with the City (such as the trustee or bond counsel) or by approving vote of holders of the Bonds pursuant to the terms of the governing instrument(s) at the time of the amendment;

(iv) If the amendment changes the type of operating data or financial information provided pursuant to the City's undertaking, the Annual Financial Information containing the amended operating data or financial information will explain, in narrative form, the reasons for the amendment and the impact of the change in the type of operating data or financial information being provided; and,

(v) If the amendment alters portions of the City's undertaking specifying the accounting principles to be followed in preparing financial statements, the Annual Financial Information for the year in which the change is made will present a comparison between the financial statements or information prepared on the basis of the new accounting principles and those prepared on the basis of the former accounting principles, which comparison should include a qualitative (and to the extent reasonably feasible, quantitative) discussion of the differences in the accounting principles and the impact of the change in principles on the presentation of the financial information. A notice of the change in accounting principles will be sent to the MSRB.

(6) Any failure by the City to perform in accordance with this Section 2.05.010(c) shall not constitute an "Event of Default" or "Default" within the meaning of any ordinance(s)

authorizing the issuance of any of the Bonds, and the rights and remedies provided to holders or beneficial owners of the Bonds under such ordinance(s) upon the occurrence of such a "Default" or such an "Event of Default" shall not apply to any such failure.

(7) If any of the foregoing provisions or terms of this Section 2.05.010(c), or any application thereof, is held invalid, the invalidity shall not affect other applications of the provisions or terms of this Section 2.05.010(c) which reasonably can be given effect without the invalid provision or term or the application thereof, and to this end, the provisions of this Section 2.05.010(c) are declared to be severab1e.

(8) None of the provisions of this Section 2.05.010(c) are in any way intended to impose upon, or result in an assumption by, the City or any of its officers, agents or employees, of any special duty or any civil law duty of care as to which any breach or alleged breach thereof could give rise to any claim for damages in tort, and the City hereby expressly disclaims any such duty or responsibility for damages, including (but not limited to) any direct, indirect, special or consequential damages. The provisions of this Section 2.05.010(c) shall not, in any way, create liability or a basis for liability on the part of the City or any officer or employee thereof for any damages that result from failure of the City to timely perform any portion, provision, term or condition of the written undertaking on its part established herein, or for any damages that result from reliance upon any provision of this Section 2.05.010(c) or any administrative decision lawfully made thereunder. However, nothing in this subsection shall operate or be construed to limit the rights of any holder or beneficial owner of any Bond to seek enforcement of the undertakings herein expressed through proceedings for a decree of specific performance in equity.

(9) This Section 2.05.010(c) shall inure solely to the benefit of the holders of the Bonds as required by Section (b)(5)(i) of the Rule, and shall create no rights in any other person or entity.

(10) The City shall maintain records of all disclosure made pursuant to this Section 2.05.010(c), including the content of such disclosure, the names of the entities with whom such disclosure was filed and the date of filing such disclosure.

(d) This Subsection (d) of Section 2.05.010 shall apply to all Bonds issued on or after December 1, 2010.

(1) The following are the definitions of the capitalized terms used in this Section 2.05.010(d) and not otherwise defined elsewhere in this Section 2.05.010(d):

(i) "Annual Financial Information" means the City's Comprehensive Annual Financial Report ("CAFR"), presenting financial and statistical information for the previous fiscal year (prepared in accordance with the guidelines of the Government Finance Officers Association of the United States and Canada ("GFOA"), as the same may be from time to time amended), and operating data with respect to the City, provided at least annually, of the type included in official statements relating to the Bonds.

(ii) "Audited Financial Statements" means the City's general purpose financial statements for the previous fiscal year, prepared in accordance with GAAP for governmental units as prescribed by the GASB (except as otherwise stated or disclosed in the notes thereto or as otherwise required by applicable law, as the same may be from

time to time amended), which shall have been audited by such auditor(s) as shall be then required or permitted by applicable law.

(iii) “City” means the city of Wichita, Kansas.

(iv) “EMMA” means the Electronic Municipal Market Access facility for municipal securities disclosure of the MSRB, or any other market access method approved under the Rule.

(v) “GAAP” means generally accepted accounting principles.

(vi) “GASB” means the Governmental Accounting Standards Board or its successors or assigns.

(vii) "MSRB" means the Municipal Securities Rulemaking Board and any successors or assigns, or any other entities or agencies approved under the Rule.

(viii) "Outstanding" when used with reference to any of the Bonds shall mean, as of a particular date, all Bonds theretofore authenticated and delivered under one or more ordinances or resolution(s) of the City, except: (i) Bonds theretofore canceled by the fiscal agent or paying agent (as defined in the ordinance(s) or resolution(s) authorizing the issuance of such Bonds) or delivered to such fiscal agent or paying agent for cancellation; (ii) Bonds for which payment or redemption monies or government securities (as defined in the ordinance(s) or resolution(s) authorizing the issuance of such Bonds), or both, in the necessary amounts have been deposited with the fiscal agent or paying agent or other such depository as provided in the ordinance(s) or resolution(s) authorizing the issuance of such Bonds, in trust for the owners thereof (whether upon or prior to maturity or the Redemption Date(s) of such Bonds); or (iii) Bonds in exchange for or in lieu of which refunding bonds have been authenticated and delivered pursuant to the terms of (and within the meaning of) the appropriate ordinance(s) or resolution(s).

(ix) “Prescribed Form” means such electronic format accompanied by such identifying information as shall have been prescribed by the MSRB and which shall be in effect on the date of filing of the applicable information.

(x) "Redemption Date(s)" shall mean, when used with respect to any Bond(s), the date(s) established as such in the ordinance(s) or resolution(s) authorizing the issuance of such Bond(s).

(xi) “Report Date” means December 31st of each year, beginning December 31, 2011.

(xii) "Reporting Event" means any of the following events, with respect to any of the Outstanding Bonds:

(A) Principal and interest payment delinquencies;

(B) Non-payment related defaults, if material;

(C) Unscheduled draws on debt service reserves reflecting financial difficulties;

(D) Unscheduled draws on credit enhancements reflecting financial difficulties;

(E) Substitution of credit or liquidity providers or their failure to perform;

(F) Adverse tax opinions, the issuance by the Internal Revenue Service of proposed or final determinations of taxability, Notice of Proposed Issue (IRS Form 5701-TEB) or other material notices or determinations with respect to the tax status of the security, or other material events affecting the tax status of the security;

(G) Modifications to rights of security holders, if material;

(H) Bond calls, if material, and tender offers;

(I) Defeasances;

(J) Release, substitution, or sale of property securing repayment of the securities, if material;

(K) Rating changes;

(L) Bankruptcy, insolvency, receivership or similar event of the obligated person;

(M) The consummation of a merger, consolidation, or acquisition involving an obligated person or the sale of all or substantially all of the assets of the obligated person, other than in the ordinary course of business, the entry into a definitive agreement to undertake such an action or the termination of a definitive agreement relating to any such actions, other than pursuant to its terms, if material;

(N) Appointment of a successor or additional trustee or the change of name of a trustee, if material.

(xiii) "Reporting Event Notice" means notice in Prescribed Form in accordance with EMMA of a Reporting Event.

(2) The City, as an “obligated person” within the meaning of the Rule, undertakes to provide the following information, at the times and to the recipients as provided in this Section 2.05.010(d):

(i) Annual Financial Information;

(ii) Audited Financial Statements; and,

(iii) Reporting Event Notices.

(3) So long as the Rule continues to require an undertaking to make ongoing disclosure as established herein, or performance of prior such undertakings, then, with respect to all of the Bonds issued subject to such requirements which remain Outstanding:

(i) The City shall provide the Annual Financial Information in Prescribed Form in accordance with EMMA to the MSRB, on or before the Report Date. The City may adjust the Report Date if the City changes its fiscal year by providing written notice of the change of fiscal year and the new Report Date to the MSRB; provided that the new Report Date shall not exceed one year from the end of the new fiscal year and provided further that the period between the final Report Date relating to the former fiscal year and the initial Report Date relating to the new fiscal year shall not exceed one year in duration. It shall be sufficient if the City provides to the MSRB the Annual Financial Information by specific reference to documents available to the public on the MSRB's Internet Web site, or filed with the SEC.

(ii) If not provided as part of the Annual Financial Information, the City shall provide the Audited Financial Statements when and if available to the MSRB in Prescribed Form in accordance with EMMA.

(iii) If a Reporting Event occurs, the City shall file a Reporting Event Notice in a timely manner not in excess of ten business days after the occurrence of the event in Prescribed Form in accordance with EMMA with the MSRB. Each "Reporting Event Notice" shall be so captioned, and shall prominently state the date, title and CUSIP numbers of the Bonds to which the Reporting Event(s) covered by the Reporting Event Notice pertain(s).

(iv) The City shall provide in Prescribed Form in accordance with EMMA in a timely manner to the MSRB notice of any failure by the City to provide Annual Financial Information on or before the Report Date to the MSRB as required by the terms of this Section 2.05.010(d).

(4) The information listed in Subsection (d)(2) shall be provided by the City to the MSRB, at www.emma.msrb.org, in the Prescribed Form or to such other location and by such other method of transmitting information that is approved by the SEC.

(5) This Section 2.05.010(d) or any provision hereof, shall be subject to nullification and repeal in the event that the City first delivers to the MSRB, an opinion of nationally recognized bond counsel to the effect that those portions of the Rule that require this Section 2.05.010(d) as a condition for particular underwriter conduct, or any such provision, are invalid, have been repealed retroactively or otherwise do not apply to the Bonds. This Section 2.05.010(d) may be amended without the consent of the holders or beneficial owners of any Bond(s), following the delivery by the City to the MSRB, of the proposed amendment and the opinion of nationally recognized bond counsel to the effect that such amendment, and giving effect thereto, will not adversely affect the adequacy of this Section 2.05.010(d) or the adequacy of the City's subsequent conduct for purposes of compliance with the Rule, provided, however, that no such amendment will be made unless the following conditions are satisfied:

(i) The amendment may only be made in connection with a change in circumstances that arises from a change in legal requirements, change in law, or change in the identity, nature, or status of the City, or type of business conducted;

(ii) The undertaking, as amended, would have complied with the requirements of the Rule at the time of any primary offering to which the undertaking applies, after taking into account any amendments or interpretations of the Rule, as well as any change in circumstances;

(iii) The amendment does not materially impair the interests of holders, as determined either by parties unaffiliated with the City (such as the trustee or bond counsel) or by approving vote of holders of the Bonds pursuant to the terms of the governing instrument(s) at the time of the amendment;

(iv) If the amendment changes the type of operating data or financial information provided pursuant to the City's undertaking, the Annual Financial Information containing the amended operating data or financial information will explain, in narrative form, the reasons for the amendment and the impact of the change in the type of operating data or financial information being provided; and,

(v) If the amendment alters portions of the City's undertaking specifying the accounting principles to be followed in preparing financial statements, the Annual Financial Information for the year in which the change is made will present a comparison between the financial statements or information prepared on the basis of the new accounting principles and those prepared on the basis of the former accounting principles, which comparison should include a qualitative (and to the extent reasonably feasible, quantitative) discussion of the differences in the accounting principles and the impact of the change in principles on the presentation of the financial information. A notice of the change in accounting principles will be sent to the MSRB.

(6) Any failure by the City to perform in accordance with this Section 2.05.010(d) shall not constitute an "Event of Default" or "Default" within the meaning of any ordinance(s) or resolution(s) authorizing the issuance of any of the Bonds, and the rights and remedies provided to holders or beneficial owners of the Bonds under such ordinance(s) or resolution(s) upon the occurrence of such a "Default" or such an "Event of Default" shall not apply to any such failure.

(7) If any of the foregoing provisions or terms of this Section 2.05.010(d), or any application thereof, is held invalid, the invalidity shall not affect other applications of the provisions or terms of this Section 2.05.010(d) which reasonably can be given effect without the invalid provision or term or the application thereof, and to this end, the provisions of this Section 2.05.010(d) are declared to be severab1e.

(8) None of the provisions of this Section 2.05.010(d) are in any way intended to impose upon, or result in an assumption by, the City or any of its officers, agents or employees, of any special duty or any civil law duty of care as to which any breach or alleged breach thereof could give rise to any claim for damages in tort, and the City hereby expressly disclaims any such duty or responsibility for damages, including (but not limited to) any direct, indirect, special or consequential damages. The provisions of this Section 2.05.010(d) shall not, in any way, create liability or a basis for liability on the part of the City or any officer or employee thereof for any damages that result from failure of the City to timely perform any portion, provision, term or condition of the written undertaking on its part established herein, or for any damages that result from reliance upon any provision of this Section 2.05.010(d) or any administrative decision lawfully made thereunder. However, nothing in this subsection shall operate or be construed to

limit the rights of any holder or beneficial owner of any Bond to seek enforcement of the undertakings herein expressed through proceedings for a decree of specific performance in equity.

(9) This Section 2.05.010(d) shall inure solely to the benefit of the holders of the Bonds as required by Section (b)(5)(i) of the Rule, and shall create no rights in any other person or entity.

(10) The City shall maintain records of all disclosure made pursuant to this Section 2.05.010(d), including the content of such disclosure, the names of the entities with whom such disclosure was filed and the date of filing such disclosure.

(11) The City may, from time to time, appoint or engage an agent to assist it in carrying out its obligations under this Section 2.05.010(d) and may discharge any such agent with or without appointing a successor agent.

(12) Nothing in this Section 2.05.010(d) shall be deemed to prevent the City from disseminating any other information, using the means of dissemination set forth in this subsection or any other means of communication, or including any other information in any Annual Financial Information or notice of occurrence of a Reporting Event in addition to that which is required by this Section 2.05.010(d). If the City chooses to include any information from any document or notice of occurrence of a Reporting Event in addition to that which is specifically required by this Section 2.05.010(d), the City shall not have any obligation under this Section 2.05.010(d) to update such information or include it in any future disclosure or notice of the occurrence of a Reporting Event.

SECTION 2. Ordinance 48-900 passed on November 16, 2010, is hereby repealed in its entirety and replaced by this ordinance.

SECTION 3. This ordinance shall be included in the Code of the City of Wichita, Kansas, and shall be effective upon its passage and publication once in the official city newspaper.

[Remainder of page intentionally left blank]

PASSED by the Governing Body of the City of Wichita, Kansas this September 13, 2011.

CITY OF WICHITA, KANSAS

_____
Carl Brewer, Mayor

Attest:

_____
Karen Sublett, City Clerk

(Seal)

Approved as to Form:

_____
Gary E. Rebenstorf, Director of Law

4831-0252-4938.2

FIRST PUBLISHED IN THE WICHITA EAGLE ON SEPTEMBER 16, 2011

ORDINANCE NO. 49-078

AN ORDINANCE AMENDING SECTION 2.05.020 OF THE CODE OF THE CITY OF WICHITA, KANSAS, RELATING TO A MASTER UNDERTAKING TO PROVIDE ONGOING DISCLOSURE IN CONNECTION WITH GENERAL OBLIGATION TEMPORARY NOTES ISSUED BY THE CITY OF WICHITA, KANSAS, FOR DISTRIBUTION IN PUBLIC OFFERINGS.

BE IT ORDAINED BY THE GOVERNING BODY OF THE CITY OF WICHITA, KANSAS:

SECTION 1. Section 2.05.020 of the Code of the City of Wichita shall read as follows:

2.05.020 Undertaking to Provide Ongoing Disclosure in Connection with City of Wichita General Temporary Notes Issued for Distribution Through Public Offering.

(a) This Section 2.05.020 establishes and constitutes a written undertaking which shall function as a master undertaking for the benefit of the holders as well as the beneficial owners of all general obligation temporary notes issued by the City of Wichita purchased for public distribution by one or more underwriters, on or after July 3, 1995 (the "Notes"), as might be required to establish legal preconditions for sale of some of the Notes through an underwriter or underwriters, under Section (b)(5)(i) of Securities and Exchange Commission ("SEC") Rule 1 5c2-12 (the "Rule") promulgated under the Securities Exchange Act of 1934, as amended.

(b) This Subsection (b) of Section 2.05.020 shall apply to all Notes issued on or between July 3, 1995, and June 30, 2009.

(1) The City of Wichita, as issuer of the Notes (the "Issuer") undertakes to provide the following information, at the times and to the recipients as provided in this Section 2.05.020(b):

(i) Annual Financial Information;

(ii) Audited Financial Statements; and,

(iii) Material Event Notices.

(2) So long as the Rule (or the policy of the Issuer with respect to sale of the Notes) continues to require an undertaking to make ongoing disclosure as established herein, or performance of prior such undertakings, then, with respect to all of the Notes issued subject to such requirements which remain Outstanding:

(i) The Issuer shall provide the Annual Financial Information on or before December 31 of each year (the "Report Date"), beginning in December 1996, to each then existing NRMSIR and the SID, if any. The Issuer may adjust the Report Date if the Issuer changes its fiscal year by providing written notice of the change of fiscal year and the new Report Date to each then existing NRMSIR and the SID, if any; provided that the new Report Date shall be not more than 365 days after the end of the new fiscal year and provided further that the final Report Date relating to the former fiscal year and the initial Report Date relating to the new fiscal year shall not exceed

one year in duration. It shall be sufficient if the Issuer provides to each then existing NRMSIR and the SID, if any, the Annual Financial Information by specific reference to documents previously provided to each NRMSIR and the SID, if any, or filed with the Securities and Exchange Commission and, if such a document is a final official statement within the meaning of the Rule, available from the Municipal Securities Rulemaking Board ("MSRB"). The Issuer shall also provide to each NRMSIR and the SID, if any, copies of each final official statement (within the meaning of the Rule) which is produced on or after July 3, 1995, in connection with the offering of any of the Notes, within 60 days after such official statement is finalized for distribution by the underwriter.

(ii) The Issuer shall provide the Audited Financial Statements as part of the Annual Financial Information described in the preceding paragraph of this subsection.

(iii) If a Material Event occurs, the Issuer shall provide a Material Event Notice in a timely manner to the MSRB and the SID, if any. Each "Material Event Notice" shall be so captioned, and shall prominently state the date, title and CUSIP numbers of the Notes to which the Material Event(s) covered by the Material Event Notice pertain(s).

(iv) The Issuer shall provide, in a timely manner, to the MSRB and to the SID, if any, notice of any failure by the Issuer to provide Annual Financial Information on or before the Report Date to each then existing NRMSIR and the SID (if any) as required by the terms of this Section 2.05.010(b).

(3) The following are the definitions of the capitalized terms used in this Section 2.05.020(b) and not otherwise defined elsewhere in this Section 2.05.020(b):

(i) "Annual Financial Information" means the Issuer's Comprehensive Annual Financial Report ("CAFR"), presenting financial and statistical information for the previous fiscal year (prepared in accordance with the guidelines of the Government Finance Officers Association of the United States and Canada ("GFOA"), as the same may be from time to time amended), and operating data with respect to the Issuer, provided at least annually, of the type included in official statements relating to the Notes (including some unaudited data).

(ii) "Audited Financial Statements" means the Issuer's general purpose financial statements for the previous fiscal year, prepared in accordance with generally accepted accounting principles ("GAAP") for governmental units as prescribed by the Governmental Accounting Standards Board ("GASB") (except as otherwise stated or disclosed in the notes thereto or as otherwise required by applicable law, as the same may be from time to time amended), which shall have been audited by such auditor(s) as shall be then required or permitted by applicable law.

(iii) "Material Event" means any of the following events, if material, with respect to any of the Outstanding Notes:

(A) Principal and interest payment delinquencies;

(B) Non-payment related defaults;

(C) Unscheduled draws on debt service reserves reflecting financial difficulties;

(D) Unscheduled draws on credit enhancements reflecting financial difficulties;

(E) Substitution of credit or liquidity providers or their failure to perform;

(F) Adverse tax opinions or events affecting the tax-exempt status of the security;

(G) Modifications to rights of security holders;

(H) Note calls;

(I) Defeasances;

(J) Release, substitution, or sale of property securing repayment of the securities;

(K) Rating changes.

(iv) "Material Event Notice" means written or electronic notice of a Material Event.

(v) "NRMSIR" means a nationally recognized municipal securities information repository, as recognized from time to time by the SEC for the purposes referred to in the Rule.

(vi) "Outstanding" when used with reference to any of the Notes shall mean, as of a particular date, all Notes theretofore authenticated and delivered under one or more Ordinances of the City of Wichita, except: (i) Notes theretofore canceled by the Fiscal Agent (as defined in the Ordinance(s) authorizing the issuance of such Notes) or delivered to such Fiscal Agent for cancellation; (ii) Notes for which payment or redemption monies or Government Securities (as defined in the Ordinance(s) authorizing the issuance of such Notes), or both, in the necessary amounts have been deposited with the Fiscal Agent or other such depository as provided in the Ordinance(s) authorizing the issuance of such Notes, in trust for the Owners thereof (whether upon or prior to maturity or the Redemption Date(s) of such Notes); or (iii) Notes in exchange for or in lieu of which Refunding Notes have been authenticated and delivered pursuant to the terms of (and within the meaning of) the appropriate Ordinance(s).

(vii) "Redemption Date(s)" shall mean, when used with respect to any Note(s), the date(s) established as such in the Ordinance(s) authorizing the issuance of such Note(s).

(viii) "SID" means a state information depository as operated or designated as such by the State of Kansas for the purposes referred to in the Rule.

(4) Unless otherwise required by law and subject to technical and economic feasibility, and to annual appropriations, the Issuer will exercise its best efforts to employ such methods of information transmission as shall be requested or recommended by the designated recipients of the Issuer's information.

(5) This Section 2.05.020(b) or any provision hereof, shall be subject to nullification and repeal in the event that the Issuer first delivers to each then existing NRMSIR and the SID, if any, an opinion of nationally recognized bond counsel to the effect that those portions of the Rule (and those portions of any policy of the Issuer) that require this Section 2.05.020(b) as a condition for particular underwriter conduct, or any such provision, are invalid, have been repealed retroactively or otherwise do not apply to the Notes. This Section 2.05.020(b) may be amended without the consent of the holders or beneficial owners of any Note(s), following the delivery by the Issuer to each then existing NRMSIR and the SID, if any, of the proposed amendment and the opinion of nationally recognized bond counsel to the effect that such amendment, and giving effect thereto, will not adversely affect the adequacy of this Section 2.05.020(b) or the adequacy of the Issuer's subsequent conduct for purposes of compliance with the Rule, provided, however, that no such amendment will be made unless the following conditions are satisfied:

(i) The amendment may only be made in connection with a change in circumstances that arises from a change in legal requirements, change in law, or change in the identity, nature, or status of the Issuer, or type of business conducted;

(ii) The undertaking, as amended, would have complied with the requirements of the Rule at the time of any primary offering to which the undertaking applies, after taking into account any amendments or interpretations of the Rule, as well as any change in circumstances;

(iii) The amendment does not materially impair the interests of holders, as determined either by parties unaffiliated with the Issuer (such as the trustee or bond counsel) or by approving vote of holders of the Notes pursuant to the terms of the governing instrument(s) at the time of the amendment;

(iv) If the amendment changes the type of operating data or financial information provided pursuant to the Issuer's undertaking, the Annual Financial Information containing the amended operating data or financial information will explain, in narrative form, the reasons for the amendment and the impact of the change in the type of operating data or financial information being provided; and,

(v) If the amendment alters portions of the Issuer's undertaking specifying the accounting principles to be followed in preparing financial statements, the Annual Financial Information for the year in which the change is made will present a comparison between the financial statements or information prepared on the basis of the new accounting principles and those prepared on the basis of the former accounting principles, which comparison should include a qualitative (and to the extent reasonably feasible, quantitative) discussion of the differences in the accounting principles and the impact of the change in principles on the presentation of the financial information. A notice of the change in accounting principles will be sent to the NRMSIRs or the MSRB, and the appropriate SID, if any.

(6) Any failure by the Issuer to perform in accordance with this Section 2.05.020(b) shall not constitute an "Event of Default" or "Default" within the meaning of any Ordinance(s) authorizing the issuance of any of the Notes, and the rights and remedies provided to holders or beneficial owners of the Notes under such Ordinance(s) upon the occurrence of such a "Default" or such an "Event of Default" shall not apply to any such failure.

(7) If any of the foregoing provisions or terms of this Section 2.05.020(b), or any application thereof, is held invalid, the invalidity shall not affect other applications of the provisions or terms of this Section 2.05.020(b) which reasonably can be given effect without the invalid provision or term or the application thereof, and to this end, the provisions of this Section 2.05.020(b) are declared to be severable.

(8) None of the provisions of this Section 2.05.020(b) are in any way intended to impose upon, or result in an assumption by, the City of Wichita or any of its officers, agents or employees, of any special duty or any civil law duty of care as to which any breach or alleged breach thereof could give rise to any claim for damages in tort, and the City hereby expressly disclaims any such duty or responsibility for damages, including (but not limited to) any direct, indirect, special or consequential damages. The provisions of this Section 2.05.020(b) shall not, in any way, create liability or a basis for liability on the part of the City of Wichita, Kansas or any officer or employee thereof for any damages that result from failure of the Issuer to timely perform any portion, provision, term or condition of the written undertaking on its part established herein, or for any damages that result from reliance upon any provision of this Section 2.05.020(b) or any administrative decision lawfully made thereunder. However, nothing in this subsection shall operate or be construed to limit the rights of any holder or beneficial owner of any Note to seek enforcement of the undertakings herein expressed through proceedings for a decree of specific performance in equity.

(c) This Subsection (c) of Section 2.05.020 shall apply to all Notes issued on or between July 17, 2009, and November 30, 2010.

(1) The following are the definitions of the capitalized terms used in this Section 2.05.020(c) and not otherwise defined elsewhere in this Section 2.05.020(c):

(i) "Annual Financial Information" means the City's Comprehensive Annual Financial Report ("CAFR"), presenting financial and statistical information for the previous fiscal year (prepared in accordance with the guidelines of the Government Finance Officers Association of the United States and Canada ("GFOA"), as the same may be from time to time amended), and operating data with respect to the City, provided at least annually, of the type included in official statements relating to the Notes (including some unaudited data).

(ii) "Audited Financial Statements" means the City's general purpose financial statements for the previous fiscal year, prepared in accordance with GAAP for governmental units as prescribed by the GASB (except as otherwise stated or disclosed in the notes thereto or as otherwise required by applicable law, as the same may be from time to time amended), which shall have been audited by such auditor(s) as shall be then required or permitted by applicable law.

(iii) “City” means the city of Wichita, Kansas.

(iv) “EMMA” means the Electronic Municipal Market Access facility for municipal securities disclosure of the MSRB, or any other market access method approved under the Rule.

(v) “GAAP” means generally accepted accounting principles.

(vi) “GASB” means the Governmental Accounting Standards Board or its successors or assigns.

(vii) "Material Event" means any of the following events, if material, with respect to any of the Outstanding Notes:

(A) Principal and interest payment delinquencies;

(B) Non-payment related defaults;

(C) Unscheduled draws on debt service reserves reflecting financial difficulties;

(D) Unscheduled draws on credit enhancements reflecting financial difficulties;

(E) Substitution of credit or liquidity providers or their failure to perform;

(F) Adverse tax opinions or events affecting the tax-exempt status of the security;

(G) Modifications to rights of security holders;

(H) Note calls (other than mandatory sinking fund redemptions);

(I) Defeasances;

(J) Release, substitution, or sale of property securing repayment of the securities;

(K) Rating changes.

(viii) "Material Event Notice" means notice in Prescribed Form in accordance with EMMA of a Material Event.

(ix) "MSRB" means the Municipal Securities Rulemaking Board and any successors or assigns, or any other entities or agencies approved under the Rule.

(x) "Outstanding" when used with reference to any of the Notes shall mean, as of a particular date, all Notes theretofore authenticated and delivered under one or more ordinances of the City, except: (i) theretofore canceled by the fiscal agent or paying agent (as defined in the ordinance(s) authorizing the issuance of such Notes) or delivered to such fiscal agent or paying agent for cancellation; (ii) Notes for which payment or redemption monies or government securities (as defined in the ordinance(s) authorizing the issuance of such Notes), or both, in the necessary amounts have been deposited with

the fiscal agent or paying agent or other such depository as provided in the ordinance(s) authorizing the issuance of such Notes, in trust for the owners thereof (whether upon or prior to maturity or the Redemption Date(s) of such Notes); or (iii) Notes in exchange for or in lieu of which refunding notes have been authenticated and delivered pursuant to the terms of (and within the meaning of) the appropriate ordinance(s).

(xi) "Prescribed Form" means such electronic format accompanied by such identifying information as shall have been prescribed by the MSRB and which shall be in effect on the date of filing of the applicable information.

(xii) "Redemption Date(s)" shall mean, when used with respect to any Note(s), the date(s) established as such in the ordinance(s) authorizing the issuance of such Note(s).

(xiii) "Report Date" means December 31st of each year, beginning December 31, 2009.

(2) The City of Wichita, as an "obligated person" within the meaning of the Rule, undertakes to provide the following information, at the times and to the recipients as provided in this Section 2.05.020(c):

(i) Annual Financial Information;

(ii) Audited Financial Statements; and,

(iii) Material Event Notices.

(3) So long as the Rule (or the policy of the Issuer with respect to sale of the Notes) continues to require an undertaking to make ongoing disclosure as established herein, or performance of prior such undertakings, then, with respect to all of the Notes issued subject to such requirements which remain Outstanding:

(i) The City shall provide the Annual Financial Information in Prescribed Form in accordance with EMMA to the MSRB, on or before the Report Date. The City may adjust the Report Date if the City changes its fiscal year by providing written notice of the change of fiscal year and the new Report Date to the MSRB; provided that the new Report Date shall be six months after the end of the new fiscal year and provided further that the period between the final Report Date relating to the former fiscal year and the initial Report Date relating to the new fiscal year shall not exceed one year in duration. It shall be sufficient if the City provides to the MSRB the Annual Financial Information by specific reference to documents available to the public on the MSRB's Internet Web site, or filed with the SEC.

(ii) If not provided as part of the Annual Financial Information, the City shall provide the Audited Financial Statements when and if available to the MSRB in Prescribed Form in accordance with EMMA.

(iii) If a Material Event occurs, the City shall file a Material Event Notice in a timely manner in Prescribed Form in accordance with EMMA with the MSRB. Each "Material Event Notice" shall be so captioned, and shall prominently state the date, title

and CUSIP numbers of the Notes to which the Material Event(s) covered by the Material Event Notice pertain(s).

(iv) The City shall provide in Prescribed Form in accordance with EMMA in a timely manner to the MSRB notice of any failure by the City to provide Annual Financial Information on or before the Report Date to the MSRB as required by the terms of this Section 2.05.010(c).

(4) The information listed in Subsection (c)(2) shall be provided by the City to the MSRB, at www.emma.msrb.org, in the Prescribed Form or by such other method of transmitting information that is approved by the SEC.

(5) This Section 2.05.020(c) or any provision hereof, shall be subject to nullification and repeal in the event that the City first delivers to the MSRB, an opinion of nationally recognized bond counsel to the effect that those portions of the Rule that require this Section 2.05.020(c) as a condition for particular underwriter conduct, or any such provision, are invalid, have been repealed retroactively or otherwise do not apply to the Notes. This Section 2.05.020(c) may be amended without the consent of the holders or beneficial owners of any Note(s), following the delivery by the City to the MSRB, of the proposed amendment and the opinion of nationally recognized bond counsel to the effect that such amendment, and giving effect thereto, will not adversely affect the adequacy of this Section 2.05.020(c) or the adequacy of the City's subsequent conduct for purposes of compliance with the Rule, provided, however, that no such amendment will be made unless the following conditions are satisfied:

(i) The amendment may only be made in connection with a change in circumstances that arises from a change in legal requirements, change in law, or change in the identity, nature, or status of the City, or type of business conducted;

(ii) The undertaking, as amended, would have complied with the requirements of the Rule at the time of any primary offering to which the undertaking applies, after taking into account any amendments or interpretations of the Rule, as well as any change in circumstances;

(iii) The amendment does not materially impair the interests of holders, as determined either by parties unaffiliated with the City (such as the trustee or bond counsel) or by approving vote of holders of the Notes pursuant to the terms of the governing instrument(s) at the time of the amendment;

(iv) If the amendment changes the type of operating data or financial information provided pursuant to the City's undertaking, the Annual Financial Information containing the amended operating data or financial information will explain, in narrative form, the reasons for the amendment and the impact of the change in the type of operating data or financial information being provided; and,

(v) If the amendment alters portions of the City's undertaking specifying the accounting principles to be followed in preparing financial statements, the Annual Financial Information for the year in which the change is made will present a comparison between the financial statements or information prepared on the basis of the new accounting principles and those prepared on the basis of the former accounting principles, which comparison should include a qualitative (and to the extent reasonably feasible, quantitative) discussion of the differences in the accounting principles and the impact of

the change in principles on the presentation of the financial information. A notice of the change in accounting principles will be sent to the MSRB.

(6) Any failure by the City to perform in accordance with this Section 2.05.020(c) shall not constitute an "Event of Default" or "Default" within the meaning of any ordinance(s) authorizing the issuance of any of the Notes, and the rights and remedies provided to holders or beneficial owners of the Notes under such ordinance(s) upon the occurrence of such a "Default" or such an "Event of Default" shall not apply to any such failure.

(7) If any of the foregoing provisions or terms of this Section 2.05.020(c), or any application thereof, is held invalid, the invalidity shall not affect other applications of the provisions or terms of this Section 2.05.020(c) which reasonably can be given effect without the invalid provision or term or the application thereof, and to this end, the provisions of this Section 2.05.020(c) are declared to be severab1e.

(8) None of the provisions of this Section 2.05.020(c) are in any way intended to impose upon, or result in an assumption by, the City or any of its officers, agents or employees, of any special duty or any civil law duty of care as to which any breach or alleged breach thereof could give rise to any claim for damages in tort, and the City hereby expressly disclaims any such duty or responsibility for damages, including (but not limited to) any direct, indirect, special or consequential damages. The provisions of this Section 2.05.020(c) shall not, in any way, create liability or a basis for liability on the part of the City or any officer or employee thereof for any damages that result from failure of the City to timely perform any portion, provision, term or condition of the written undertaking on its part established herein, or for any damages that result from reliance upon any provision of this Section 2.05.020(c) or any administrative decision lawfully made thereunder. However, nothing in this subsection shall operate or be construed to limit the rights of any holder or beneficial owner of any Note to seek enforcement of the undertakings herein expressed through proceedings for a decree of specific performance in equity.

(9) This Section 2.05.020(c) shall inure solely to the benefit of the holders of the Notes as required by Section (b)(5)(i) of the Rule, and shall create no rights in any other person or entity.

(10) The City shall maintain records of all disclosure made pursuant to this Section 2.05.020(c), including the content of such disclosure, the names of the entities with whom such disclosure was filed and the date of filing such disclosure.

(d) This Subsection (d) of Section 2.05.010 shall apply to all Notes issued on or after December 1, 2010.

(1) The following are the definitions of the capitalized terms used in this Section 2.05.010(d) and not otherwise defined elsewhere in this Section 2.05.010(d):

(i) "Annual Financial Information" means the City's Comprehensive Annual Financial Report ("CAFR"), presenting financial and statistical information for the previous fiscal year (prepared in accordance with the guidelines of the Government Finance Officers Association of the United States and Canada ("GFOA"), as the same may be from time to time amended), and operating data with respect to the City, provided at least annually, of the type included in official statements relating to the Notes.

(ii) "Audited Financial Statements" means the City's general purpose financial statements for the previous fiscal year, prepared in accordance with GAAP for governmental units as prescribed by the GASB (except as otherwise stated or disclosed in the notes thereto or as otherwise required by applicable law, as the same may be from time to time amended), which shall have been audited by such auditor(s) as shall be then required or permitted by applicable law.

(iii) “City” means the city of Wichita, Kansas.

(iv) “EMMA” means the Electronic Municipal Market Access facility for municipal securities disclosure of the MSRB, or any other market access method approved under the Rule.

(v) “GAAP” means generally accepted accounting principles.

(vi) “GASB” means the Governmental Accounting Standards Board or its successors or assigns.

(vii) "MSRB" means the Municipal Securities Rulemaking Board and any successors or assigns, or any other entities or agencies approved under the Rule.

(viii) "Outstanding" when used with reference to any of the Notes shall mean, as of a particular date, all Notes theretofore authenticated and delivered under one or more ordinances or resolution(s) of the City, except: (i) Notes theretofore canceled by the fiscal agent or paying agent (as defined in the ordinance(s) or resolution(s) authorizing the issuance of such Notes) or delivered to such fiscal agent or paying agent for cancellation; (ii) Notes for which payment or redemption monies or government securities (as defined in the ordinance(s) or resolution(s) authorizing the issuance of such Notes), or both, in the necessary amounts have been deposited with the fiscal agent or paying agent or other such depository as provided in the ordinance(s) or resolution(s) authorizing the issuance of such Notes, in trust for the owners thereof (whether upon or prior to maturity or the Redemption Date(s) of such Notes); or (iii) Notes in exchange for or in lieu of which refunding notes have been authenticated and delivered pursuant to the terms of (and within the meaning of) the appropriate ordinance(s) or resolution(s).

(ix) “Prescribed Form” means such electronic format accompanied by such identifying information as shall have been prescribed by the MSRB and which shall be in effect on the date of filing of the applicable information.

(x) "Redemption Date(s)" shall mean, when used with respect to any Note(s), the date(s) established as such in the ordinance(s) or resolution(s) authorizing the issuance of such Note(s).

(xi) “Report Date” means December 31st of each year, beginning December 31, 2011.

(xii) "Reporting Event" means any of the following events, with respect to any of the Outstanding Notes:

(A) Principal and interest payment delinquencies;

(B) Non-payment related defaults, if material;

(C) Unscheduled draws on debt service reserves reflecting financial difficulties;

(D) Unscheduled draws on credit enhancements reflecting financial difficulties;

(E) Substitution of credit or liquidity providers or their failure to perform;

(F) Adverse tax opinions, the issuance by the Internal Revenue Service of proposed or final determinations of taxability, Notice of Proposed Issue (IRS Form 5701-TEB) or other material notices or determinations with respect to the tax status of the security, or other material events affecting the tax status of the security;

(G) Modifications to rights of security holders, if material;

(H) Note calls, if material, and tender offers;

(I) Defeasances;

(J) Release, substitution, or sale of property securing repayment of the securities, if material;

(K) Rating changes;

(L) Bankruptcy, insolvency, receivership or similar event of the obligated person;

(M) The consummation of a merger, consolidation, or acquisition involving an obligated person or the sale of all or substantially all of the assets of the obligated person, other than in the ordinary course of business, the entry into a definitive agreement to undertake such an action or the termination of a definitive agreement relating to any such actions, other than pursuant to its terms, if material;

(N) Appointment of a successor or additional trustee or the change of name of a trustee, if material.

(xiii) "Reporting Event Notice" means notice in Prescribed Form in accordance with EMMA of a Reporting Event.

(2) The City, as an “obligated person” within the meaning of the Rule, undertakes to provide the following information, at the times and to the recipients as provided in this Section 2.05.010(d):

(i) Annual Financial Information;

(ii) Audited Financial Statements; and,

(iii) Reporting Event Notices.

(3) So long as the Rule continues to require an undertaking to make ongoing disclosure as established herein, or performance of prior such undertakings, then, with respect to all of the Notes issued subject to such requirements which remain Outstanding:

(i) The City shall provide the Annual Financial Information in Prescribed Form in accordance with EMMA to the MSRB, on or before the Report Date. The City may adjust the Report Date if the City changes its fiscal year by providing written notice of the change of fiscal year and the new Report Date to the MSRB; provided that the new Report Date shall not exceed one year from the end of the new fiscal year and provided further that the period between the final Report Date relating to the former fiscal year and the initial Report Date relating to the new fiscal year shall not exceed one year in duration. It shall be sufficient if the City provides to the MSRB the Annual Financial Information by specific reference to documents available to the public on the MSRB's Internet Web site, or filed with the SEC.

(ii) If not provided as part of the Annual Financial Information, the City shall provide the Audited Financial Statements when and if available to the MSRB in Prescribed Form in accordance with EMMA.

(iii) If a Reporting Event occurs, the City shall file a Reporting Event Notice in a timely manner not in excess of ten business days after the occurrence of the event in Prescribed Form in accordance with EMMA with the MSRB. Each "Reporting Event Notice" shall be so captioned, and shall prominently state the date, title and CUSIP numbers of the Notes to which the Reporting Event(s) covered by the Reporting Event Notice pertain(s).

(iv) The City shall provide in Prescribed Form in accordance with EMMA in a timely manner to the MSRB notice of any failure by the City to provide Annual Financial Information on or before the Report Date to the MSRB as required by the terms of this Section 2.05.010(d).

(4) The information listed in Subsection (d)(2) shall be provided by the City to the MSRB, at www.emma.msrb.org, in the Prescribed Form or to such other location and by such other method of transmitting information that is approved by the SEC.

(5) This Section 2.05.010(d) or any provision hereof, shall be subject to nullification and repeal in the event that the City first delivers to the MSRB, an opinion of nationally recognized bond counsel to the effect that those portions of the Rule that require this Section 2.05.010(d) as a condition for particular underwriter conduct, or any such provision, are invalid, have been repealed retroactively or otherwise do not apply to the Notes. This Section 2.05.010(d) may be amended without the consent of the holders or beneficial owners of any Note(s), following the delivery by the City to the MSRB, of the proposed amendment and the opinion of nationally recognized bond counsel to the effect that such amendment, and giving effect thereto, will not adversely affect the adequacy of this Section 2.05.010(d) or the adequacy of the City's subsequent conduct for purposes of compliance with the Rule, provided, however, that no such amendment will be made unless the following conditions are satisfied:

(i) The amendment may only be made in connection with a change in circumstances that arises from a change in legal requirements, change in law, or change in the identity, nature, or status of the City, or type of business conducted;

(ii) The undertaking, as amended, would have complied with the requirements of the Rule at the time of any primary offering to which the undertaking applies, after taking into account any amendments or interpretations of the Rule, as well as any change in circumstances;

(iii) The amendment does not materially impair the interests of holders, as determined either by parties unaffiliated with the City (such as the trustee or bond counsel) or by approving vote of holders of the Notes pursuant to the terms of the governing instrument(s) at the time of the amendment;

(iv) If the amendment changes the type of operating data or financial information provided pursuant to the City's undertaking, the Annual Financial Information containing the amended operating data or financial information will explain, in narrative form, the reasons for the amendment and the impact of the change in the type of operating data or financial information being provided; and,

(v) If the amendment alters portions of the City's undertaking specifying the accounting principles to be followed in preparing financial statements, the Annual Financial Information for the year in which the change is made will present a comparison between the financial statements or information prepared on the basis of the new accounting principles and those prepared on the basis of the former accounting principles, which comparison should include a qualitative (and to the extent reasonably feasible, quantitative) discussion of the differences in the accounting principles and the impact of the change in principles on the presentation of the financial information. A notice of the change in accounting principles will be sent to the MSRB.

(6) Any failure by the City to perform in accordance with this Section 2.05.010(d) shall not constitute an "Event of Default" or "Default" within the meaning of any ordinance(s) or resolution(s) authorizing the issuance of any of the Notes, and the rights and remedies provided to holders or beneficial owners of the Notes under such ordinance(s) or resolution(s) upon the occurrence of such a "Default" or such an "Event of Default" shall not apply to any such failure.

(7) If any of the foregoing provisions or terms of this Section 2.05.010(d), or any application thereof, is held invalid, the invalidity shall not affect other applications of the provisions or terms of this Section 2.05.010(d) which reasonably can be given effect without the invalid provision or term or the application thereof, and to this end, the provisions of this Section 2.05.010(d) are declared to be severab1e.

(8) None of the provisions of this Section 2.05.010(d) are in any way intended to impose upon, or result in an assumption by, the City or any of its officers, agents or employees, of any special duty or any civil law duty of care as to which any breach or alleged breach thereof could give rise to any claim for damages in tort, and the City hereby expressly disclaims any such duty or responsibility for damages, including (but not limited to) any direct, indirect, special or consequential damages. The provisions of this Section 2.05.010(d) shall not, in any way, create liability or a basis for liability on the part of the City or any officer or employee thereof for any damages that result from failure of the City to timely perform any portion, provision, term or

condition of the written undertaking on its part established herein, or for any damages that result from reliance upon any provision of this Section 2.05.010(d) or any administrative decision lawfully made thereunder. However, nothing in this subsection shall operate or be construed to limit the rights of any holder or beneficial owner of any Note to seek enforcement of the undertakings herein expressed through proceedings for a decree of specific performance in equity.

(9) This Section 2.05.010(d) shall inure solely to the benefit of the holders of the Notes as required by Section (b)(5)(i) of the Rule, and shall create no rights in any other person or entity.

(10) The City shall maintain records of all disclosure made pursuant to this Section 2.05.010(d), including the content of such disclosure, the names of the entities with whom such disclosure was filed and the date of filing such disclosure.

(11) The City may, from time to time, appoint or engage an agent to assist it in carrying out its obligations under this Section 2.05.010(d) and may discharge any such agent with or without appointing a successor agent.

(12) Nothing in this Section 2.05.010(d) shall be deemed to prevent the City from disseminating any other information, using the means of dissemination set forth in this subsection or any other means of communication, or including any other information in any Annual Financial Information or notice of occurrence of a Reporting Event in addition to that which is required by this Section 2.05.010(d). If the City chooses to include any information from any document or notice of occurrence of a Reporting Event in addition to that which is specifically required by this Section 2.05.010(d), the City shall not have any obligation under this Section 2.05.010(d) to update such information or include it in any future disclosure or notice of the occurrence of a Reporting Event.

SECTION 2. Ordinance 48-901, passed on November 16, 2010, is hereby repealed in its entirety and replaced by this ordinance.

SECTION 3. This ordinance shall be included in the Code of the City of Wichita, Kansas, and shall be effective upon its passage and publication once in the official city newspaper.

[Remainder of page intentionally left blank]

PASSED by the Governing Body of the City of Wichita, Kansas this September 13, 2011.

CITY OF WICHITA, KANSAS

_____

Carl Brewer, Mayor

Attest:

_____

Karen Sublett, City Clerk

(Seal)

Approved as to Form:

_____

Gary E. Rebenstorf, Director of Law

4833-2685-5434.2

FIRST PUBLISHED IN THE ~~DAILY REPORTER ON DECEMBER 2, 2010~~WICHITA EAGLE ON _____, 2011

ORDINANCE NO. ~~48-901~~_____

AN ORDINANCE AMENDING SECTION 2.05.020 OF THE CODE OF THE CITY OF WICHITA, KANSAS, RELATING TO A MASTER UNDERTAKING TO PROVIDE ONGOING DISCLOSURE IN CONNECTION WITH GENERAL OBLIGATION TEMPORARY NOTES ISSUED BY THE CITY OF WICHITA, KANSAS, FOR DISTRIBUTION IN PUBLIC OFFERINGS.

BE IT ORDAINED BY THE GOVERNING BODY OF THE CITY OF WICHITA, KANSAS:

SECTION 1. Section 2.05.020 of the Code of the City of Wichita shall read as follows:

2.05.020 Undertaking to Provide Ongoing Disclosure in Connection with City of Wichita General Temporary Notes Issued for Distribution Through Public Offering.

(a) This Section 2.05.020 establishes and constitutes a written undertaking which shall function as a master undertaking for the benefit of the holders as well as the beneficial owners of all general obligation temporary notes issued by the City of Wichita purchased for public distribution by one or more underwriters, on or after July 3, 1995 (the "Notes"), as might be required to establish legal preconditions for sale of some of the Notes through an underwriter or underwriters, under Section (b)(5)(i) of Securities and Exchange Commission ("SEC") Rule 1 5c2-12 (the "Rule") promulgated under the Securities Exchange Act of 1934, as amended.

(b) This Subsection (b) of Section 2.05.020 shall apply to all Notes issued on or between July 3, 1995, and June 30, 2009.

(1) The City of Wichita, as issuer of the Notes (the "Issuer") undertakes to provide the following information, at the times and to the recipients as provided in this Section 2.05.020(b):

(i) Annual Financial Information;

(ii) Audited Financial Statements; and,

(iii) Material Event Notices.

(2) So long as the Rule (or the policy of the Issuer with respect to sale of the Notes) continues to require an undertaking to make ongoing disclosure as established herein, or performance of prior such undertakings, then, with respect to all of the Notes issued subject to such requirements which remain Outstanding:

(i) The Issuer shall provide the Annual Financial Information on or before December 31 of each year (the "Report Date"), beginning in December 1996, to each then existing NRMSIR and the SID, if any. The Issuer may adjust the Report Date if the Issuer changes its fiscal year by providing written notice of the change of fiscal year and the new Report Date to each then existing NRMSIR and the SID, if any; provided that the new Report Date shall be not more than 365 days after the end of the new fiscal year and provided further that the final Report Date relating to the former

fiscal year and the initial Report Date relating to the new fiscal year shall not exceed one year in duration. It shall be sufficient if the Issuer provides to each then existing NRMSIR and the SID, if any, the Annual Financial Information by specific reference to documents previously provided to each NRMSIR and the SID, if any, or filed with the Securities and Exchange Commission and, if such a document is a final official statement within the meaning of the Rule, available from the Municipal Securities Rulemaking Board ("MSRB"). The Issuer shall also provide to each NRMSIR and the SID, if any, copies of each final official statement (within the meaning of the Rule) which is produced on or after July 3, 1995, in connection with the offering of any of the Notes, within 60 days after such official statement is finalized for distribution by the underwriter.

(ii) The Issuer shall provide the Audited Financial Statements as part of the Annual Financial Information described in the preceding paragraph of this subsection.

(iii) If a Material Event occurs, the Issuer shall provide a Material Event Notice in a timely manner to the MSRB and the SID, if any. Each "Material Event Notice" shall be so captioned, and shall prominently state the date, title and CUSIP numbers of the Notes to which the Material Event(s) covered by the Material Event Notice pertain(s).

(iv) The Issuer shall provide, in a timely manner, to the MSRB and to the SID, if any, notice of any failure by the Issuer to provide Annual Financial Information on or before the Report Date to each then existing NRMSIR and the SID (if any) as required by the terms of this Section 2.05.010(b).

(3) The following are the definitions of the capitalized terms used in this Section 2.05.020(b) and not otherwise defined elsewhere in this Section 2.05.020(b):

(i) "Annual Financial Information" means the Issuer's Comprehensive Annual Financial Report ("CAFR"), presenting financial and statistical information for the previous fiscal year (prepared in accordance with the guidelines of the Government Finance Officers Association of the United States and Canada ("GFOA"), as the same may be from time to time amended), and operating data with respect to the Issuer, provided at least annually, of the type included in official statements relating to the Notes (including some unaudited data).

(ii) "Audited Financial Statements" means the Issuer's general purpose financial statements for the previous fiscal year, prepared in accordance with generally accepted accounting principles ("GAAP") for governmental units as prescribed by the Governmental Accounting Standards Board ("GASB") (except as otherwise stated or disclosed in the notes thereto or as otherwise required by applicable law, as the same may be from time to time amended), which shall have been audited by such auditor(s) as shall be then required or permitted by applicable law.

(iii) "Material Event" means any of the following events, if material, with respect to any of the Outstanding Notes:

(A) Principal and interest payment delinquencies;

(B) Non-payment related defaults;

(C) Unscheduled draws on debt service reserves reflecting financial difficulties;

(D) Unscheduled draws on credit enhancements reflecting financial difficulties;

(E) Substitution of credit or liquidity providers or their failure to perform;

(F) Adverse tax opinions or events affecting the tax-exempt status of the security;

(G) Modifications to rights of security holders;

(H) Note calls;

(I) Defeasances;

(J) Release, substitution, or sale of property securing repayment of the securities;

(K) Rating changes.

(iv) "Material Event Notice" means written or electronic notice of a Material Event.

(v) "NRMSIR" means a nationally recognized municipal securities information repository, as recognized from time to time by the SEC for the purposes referred to in the Rule.

(vi) "Outstanding" when used with reference to any of the Notes shall mean, as of a particular date, all Notes theretofore authenticated and delivered under one or more Ordinances of the City of Wichita, except: (i) Notes theretofore canceled by the Fiscal Agent (as defined in the Ordinance(s) authorizing the issuance of such Notes) or delivered to such Fiscal Agent for cancellation; (ii) Notes for which payment or redemption monies or Government Securities (as defined in the Ordinance(s) authorizing the issuance of such Notes), or both, in the necessary amounts have been deposited with the Fiscal Agent or other such depository as provided in the Ordinance(s) authorizing the issuance of such Notes, in trust for the Owners thereof (whether upon or prior to maturity or the Redemption Date(s) of such Notes); or (iii) Notes in exchange for or in lieu of which Refunding Notes have been authenticated and delivered pursuant to the terms of (and within the meaning of) the appropriate Ordinance(s).

(vii) "Redemption Date(s)" shall mean, when used with respect to any Note(s), the date(s) established as such in the Ordinance(s) authorizing the issuance of such Note(s).

(viii) "SID" means a state information depository as operated or designated as such by the State of Kansas for the purposes referred to in the Rule.

(4) Unless otherwise required by law and subject to technical and economic feasibility, and to annual appropriations, the Issuer will exercise its best efforts to employ such methods of information transmission as shall be requested or recommended by the designated recipients of the Issuer's information.

(5) This Section 2.05.020(b) or any provision hereof, shall be subject to nullification and repeal in the event that the Issuer first delivers to each then existing NRMSIR and the SID, if any, an opinion of nationally recognized bond counsel to the effect that those portions of the Rule (and those portions of any policy of the Issuer) that require this Section 2.05.020(b) as a condition for particular underwriter conduct, or any such provision, are invalid, have been repealed retroactively or otherwise do not apply to the Notes. This Section 2.05.020(b) may be amended without the consent of the holders or beneficial owners of any Note(s), following the delivery by the Issuer to each then existing NRMSIR and the SID, if any, of the proposed amendment and the opinion of nationally recognized bond counsel to the effect that such amendment, and giving effect thereto, will not adversely affect the adequacy of this Section 2.05.020(b) or the adequacy of the Issuer's subsequent conduct for purposes of compliance with the Rule, provided, however, that no such amendment will be made unless the following conditions are satisfied:

(i) The amendment may only be made in connection with a change in circumstances that arises from a change in legal requirements, change in law, or change in the identity, nature, or status of the Issuer, or type of business conducted;

(ii) The undertaking, as amended, would have complied with the requirements of the Rule at the time of any primary offering to which the undertaking applies, after taking into account any amendments or interpretations of the Rule, as well as any change in circumstances;

(iii) The amendment does not materially impair the interests of holders, as determined either by parties unaffiliated with the Issuer (such as the trustee or bond counsel) or by approving vote of holders of the Notes pursuant to the terms of the governing instrument(s) at the time of the amendment;

(iv) If the amendment changes the type of operating data or financial information provided pursuant to the Issuer's undertaking, the Annual Financial Information containing the amended operating data or financial information will explain, in narrative form, the reasons for the amendment and the impact of the change in the type of operating data or financial information being provided; and,

(v) If the amendment alters portions of the Issuer's undertaking specifying the accounting principles to be followed in preparing financial statements, the Annual Financial Information for the year in which the change is made will present a comparison between the financial statements or information prepared on the basis of the new accounting principles and those prepared on the basis of the former accounting principles, which comparison should include a qualitative (and to the extent reasonably feasible, quantitative) discussion of the differences in the accounting principles and the impact of the change in principles on the presentation of the financial information. A notice of the change in accounting principles will be sent to the NRMSIRs or the MSRB, and the appropriate SID, if any.

(6) Any failure by the Issuer to perform in accordance with this Section 2.05.020(b) shall not constitute an "Event of Default" or "Default" within the meaning of any Ordinance(s) authorizing the issuance of any of the Notes, and the rights and remedies provided to holders or beneficial owners of the Notes under such Ordinance(s) upon the occurrence of such a "Default" or such an "Event of Default" shall not apply to any such failure.

(7) If any of the foregoing provisions or terms of this Section 2.05.020(b), or any application thereof, is held invalid, the invalidity shall not affect other applications of the provisions or terms of this Section 2.05.020(b) which reasonably can be given effect without the invalid provision or term or the application thereof, and to this end, the provisions of this Section 2.05.020(b) are declared to be severable.

(8) None of the provisions of this Section 2.05.020(b) are in any way intended to impose upon, or result in an assumption by, the City of Wichita or any of its officers, agents or employees, of any special duty or any civil law duty of care as to which any breach or alleged breach thereof could give rise to any claim for damages in tort, and the City hereby expressly disclaims any such duty or responsibility for damages, including (but not limited to) any direct, indirect, special or consequential damages. The provisions of this Section 2.05.020(b) shall not, in any way, create liability or a basis for liability on the part of the City of Wichita, Kansas or any officer or employee thereof for any damages that result from failure of the Issuer to timely perform any portion, provision, term or condition of the written undertaking on its part established herein, or for any damages that result from reliance upon any provision of this Section 2.05.020(b) or any administrative decision lawfully made thereunder. However, nothing in this subsection shall operate or be construed to limit the rights of any holder or beneficial owner of any Note to seek enforcement of the undertakings herein expressed through proceedings for a decree of specific performance in equity.

(c) This Subsection (c) of Section 2.05.020 shall apply to all Notes issued on or between July 17, 2009, and November 30, 2010.

(1) The following are the definitions of the capitalized terms used in this Section 2.05.020(c) and not otherwise defined elsewhere in this Section 2.05.020(c):

(i) "Annual Financial Information" means the City's Comprehensive Annual Financial Report ("CAFR"), presenting financial and statistical information for the previous fiscal year (prepared in accordance with the guidelines of the Government Finance Officers Association of the United States and Canada ("GFOA"), as the same may be from time to time amended), and operating data with respect to the City, provided at least annually, of the type included in official statements relating to the Notes (including some unaudited data).

(ii) "Audited Financial Statements" means the City's general purpose financial statements for the previous fiscal year, prepared in accordance with GAAP for governmental units as prescribed by the GASB (except as otherwise stated or disclosed in the notes thereto or as otherwise required by applicable law, as the same may be from time to time amended), which shall have been audited by such auditor(s) as shall be then required or permitted by applicable law.

(iii) “City” means the city of Wichita, Kansas.

(iv) “EMMA” means the Electronic Municipal Market Access facility for municipal securities disclosure of the MSRB, or any other market access method approved under the Rule.

(v) “GAAP” means generally accepted accounting principles.

(vi) “GASB” means the Governmental Accounting Standards Board or its successors or assigns.

(vii) "Material Event" means any of the following events, if material, with respect to any of the Outstanding Notes:

(A) Principal and interest payment delinquencies;

(B) Non-payment related defaults;

(C) Unscheduled draws on debt service reserves reflecting financial difficulties;

(D) Unscheduled draws on credit enhancements reflecting financial difficulties;

(E) Substitution of credit or liquidity providers or their failure to perform;

(F) Adverse tax opinions or events affecting the tax-exempt status of the security;

(G) Modifications to rights of security holders;

(H) Note calls (other than mandatory sinking fund redemptions);

(I) Defeasances;

(J) Release, substitution, or sale of property securing repayment of the securities;

(K) Rating changes.

(viii) "Material Event Notice" means notice in Prescribed Form in accordance with EMMA of a Material Event.

(ix) "MSRB" means the Municipal Securities Rulemaking Board and any successors or assigns, or any other entities or agencies approved under the Rule.

(x) "Outstanding" when used with reference to any of the Notes shall mean, as of a particular date, all Notes theretofore authenticated and delivered under one or more ordinances of the City, except: (i) theretofore canceled by the fiscal agent or paying agent (as defined in the ordinance(s) authorizing the issuance of such Notes) or delivered to such fiscal agent or paying agent for cancellation; (ii) Notes for which payment or redemption monies or government securities (as defined in the ordinance(s) authorizing the issuance of such Notes), or both, in the necessary amounts have been deposited with

the fiscal agent or paying agent or other such depository as provided in the ordinance(s) authorizing the issuance of such Notes, in trust for the owners thereof (whether upon or prior to maturity or the Redemption Date(s) of such Notes); or (iii) Notes in exchange for or in lieu of which refunding notes have been authenticated and delivered pursuant to the terms of (and within the meaning of) the appropriate ordinance(s).

(xi) "Prescribed Form" means such electronic format accompanied by such identifying information as shall have been prescribed by the MSRB and which shall be in effect on the date of filing of the applicable information.

(xii) "Redemption Date(s)" shall mean, when used with respect to any Note(s), the date(s) established as such in the ordinance(s) authorizing the issuance of such Note(s).

(xiii) "Report Date" means December 31st of each year, beginning December 31, 2009.

(2) The City of Wichita, as an "obligated person" within the meaning of the Rule, undertakes to provide the following information, at the times and to the recipients as provided in this Section 2.05.020(c):

(i) Annual Financial Information;

(ii) Audited Financial Statements; and,

(iii) Material Event Notices.

(3) So long as the Rule (or the policy of the Issuer with respect to sale of the Notes) continues to require an undertaking to make ongoing disclosure as established herein, or performance of prior such undertakings, then, with respect to all of the Notes issued subject to such requirements which remain Outstanding:

(i) The City shall provide the Annual Financial Information in Prescribed Form in accordance with EMMA to the MSRB, on or before the Report Date. The City may adjust the Report Date if the City changes its fiscal year by providing written notice of the change of fiscal year and the new Report Date to the MSRB; provided that the new Report Date shall be six months after the end of the new fiscal year and provided further that the period between the final Report Date relating to the former fiscal year and the initial Report Date relating to the new fiscal year shall not exceed one year in duration. It shall be sufficient if the City provides to the MSRB the Annual Financial Information by specific reference to documents available to the public on the MSRB's Internet Web site, or filed with the SEC.

(ii) If not provided as part of the Annual Financial Information, the City shall provide the Audited Financial Statements when and if available to the MSRB in Prescribed Form in accordance with EMMA.

(iii) If a Material Event occurs, the City shall file a Material Event Notice in a timely manner in Prescribed Form in accordance with EMMA with the MSRB. Each "Material Event Notice" shall be so captioned, and shall prominently state the date, title

and CUSIP numbers of the Notes to which the Material Event(s) covered by the Material Event Notice pertain(s).

(iv) The City shall provide in Prescribed Form in accordance with EMMA in a timely manner to the MSRB notice of any failure by the City to provide Annual Financial Information on or before the Report Date to the MSRB as required by the terms of this Section 2.05.010(c).

(4) The information listed in Subsection (c)(2) shall be provided by the City to the MSRB, at www.emma.msrb.org, in the Prescribed Form or by such other method of transmitting information that is approved by the SEC.

(5) This Section 2.05.020(c) or any provision hereof, shall be subject to nullification and repeal in the event that the City first delivers to the MSRB, an opinion of nationally recognized bond counsel to the effect that those portions of the Rule that require this Section 2.05.020(c) as a condition for particular underwriter conduct, or any such provision, are invalid, have been repealed retroactively or otherwise do not apply to the Notes. This Section 2.05.020(c) may be amended without the consent of the holders or beneficial owners of any Note(s), following the delivery by the City to the MSRB, of the proposed amendment and the opinion of nationally recognized bond counsel to the effect that such amendment, and giving effect thereto, will not adversely affect the adequacy of this Section 2.05.020(c) or the adequacy of the City's subsequent conduct for purposes of compliance with the Rule, provided, however, that no such amendment will be made unless the following conditions are satisfied:

(i) The amendment may only be made in connection with a change in circumstances that arises from a change in legal requirements, change in law, or change in the identity, nature, or status of the City, or type of business conducted;

(ii) The undertaking, as amended, would have complied with the requirements of the Rule at the time of any primary offering to which the undertaking applies, after taking into account any amendments or interpretations of the Rule, as well as any change in circumstances;

(iii) The amendment does not materially impair the interests of holders, as determined either by parties unaffiliated with the City (such as the trustee or bond counsel) or by approving vote of holders of the Notes pursuant to the terms of the governing instrument(s) at the time of the amendment;

(iv) If the amendment changes the type of operating data or financial information provided pursuant to the City's undertaking, the Annual Financial Information containing the amended operating data or financial information will explain, in narrative form, the reasons for the amendment and the impact of the change in the type of operating data or financial information being provided; and,

(v) If the amendment alters portions of the City's undertaking specifying the accounting principles to be followed in preparing financial statements, the Annual Financial Information for the year in which the change is made will present a comparison between the financial statements or information prepared on the basis of the new accounting principles and those prepared on the basis of the former accounting principles, which comparison should include a qualitative (and to the extent reasonably feasible, quantitative) discussion of the differences in the accounting principles and the impact of

the change in principles on the presentation of the financial information. A notice of the change in accounting principles will be sent to the MSRB.

(6) Any failure by the City to perform in accordance with this Section 2.05.020(c) shall not constitute an "Event of Default" or "Default" within the meaning of any ordinance(s) authorizing the issuance of any of the Notes, and the rights and remedies provided to holders or beneficial owners of the Notes under such ordinance(s) upon the occurrence of such a "Default" or such an "Event of Default" shall not apply to any such failure.

(7) If any of the foregoing provisions or terms of this Section 2.05.020(c), or any application thereof, is held invalid, the invalidity shall not affect other applications of the provisions or terms of this Section 2.05.020(c) which reasonably can be given effect without the invalid provision or term or the application thereof, and to this end, the provisions of this Section 2.05.020(c) are declared to be severab1e.

(8) None of the provisions of this Section 2.05.020(c) are in any way intended to impose upon, or result in an assumption by, the City or any of its officers, agents or employees, of any special duty or any civil law duty of care as to which any breach or alleged breach thereof could give rise to any claim for damages in tort, and the City hereby expressly disclaims any such duty or responsibility for damages, including (but not limited to) any direct, indirect, special or consequential damages. The provisions of this Section 2.05.020(c) shall not, in any way, create liability or a basis for liability on the part of the City or any officer or employee thereof for any damages that result from failure of the City to timely perform any portion, provision, term or condition of the written undertaking on its part established herein, or for any damages that result from reliance upon any provision of this Section 2.05.020(c) or any administrative decision lawfully made thereunder. However, nothing in this subsection shall operate or be construed to limit the rights of any holder or beneficial owner of any Note to seek enforcement of the undertakings herein expressed through proceedings for a decree of specific performance in equity.

(9) This Section 2.05.020(c) shall inure solely to the benefit of the holders of the Notes as required by Section (b)(5)(i) of the Rule, and shall create no rights in any other person or entity.

(10) The City shall maintain records of all disclosure made pursuant to this Section 2.05.020(c), including the content of such disclosure, the names of the entities with whom such disclosure was filed and the date of filing such disclosure.

(d) This Subsection (d) of Section 2.05.010 shall apply to all Notes issued on or after December 1, 2010.

(1) The following are the definitions of the capitalized terms used in this Section 2.05.010(d) and not otherwise defined elsewhere in this Section 2.05.010(d):

(i) "Annual Financial Information" means the City's Comprehensive Annual Financial Report ("CAFR"), presenting financial and statistical information for the previous fiscal year (prepared in accordance with the guidelines of the Government Finance Officers Association of the United States and Canada ("GFOA"), as the same may be from time to time amended), and operating data with respect to the City, provided at least annually, of the type included in official statements relating to the Notes.

(ii) "Audited Financial Statements" means the City's general purpose financial statements for the previous fiscal year, prepared in accordance with GAAP for governmental units as prescribed by the GASB (except as otherwise stated or disclosed in the notes thereto or as otherwise required by applicable law, as the same may be from time to time amended), which shall have been audited by such auditor(s) as shall be then required or permitted by applicable law.

(iii) “City” means the city of Wichita, Kansas.

(iv) “EMMA” means the Electronic Municipal Market Access facility for municipal securities disclosure of the MSRB, or any other market access method approved under the Rule.

(v) “GAAP” means generally accepted accounting principles.

(vi) “GASB” means the Governmental Accounting Standards Board or its successors or assigns.

(vii) "MSRB" means the Municipal Securities Rulemaking Board and any successors or assigns, or any other entities or agencies approved under the Rule.

(viii) "Outstanding" when used with reference to any of the Notes shall mean, as of a particular date, all Notes theretofore authenticated and delivered under one or more ordinances or resolution(s) of the City, except: (i) Notes theretofore canceled by the fiscal agent or paying agent (as defined in the ordinance(s) or resolution(s) authorizing the issuance of such Notes) or delivered to such fiscal agent or paying agent for cancellation; (ii) Notes for which payment or redemption monies or government securities (as defined in the ordinance(s) or resolution(s) authorizing the issuance of such Notes), or both, in the necessary amounts have been deposited with the fiscal agent or paying agent or other such depository as provided in the ordinance(s) or resolution(s) authorizing the issuance of such Notes, in trust for the owners thereof (whether upon or prior to maturity or the Redemption Date(s) of such Notes); or (iii) Notes in exchange for or in lieu of which refunding notes have been authenticated and delivered pursuant to the terms of (and within the meaning of) the appropriate ordinance(s) or resolution(s).

(ix) “Prescribed Form” means such electronic format accompanied by such identifying information as shall have been prescribed by the MSRB and which shall be in effect on the date of filing of the applicable information.

(x) "Redemption Date(s)" shall mean, when used with respect to any Note(s), the date(s) established as such in the ordinance(s) or resolution(s) authorizing the issuance of such Note(s).

(xi) “Report Date” means December 31st of each year, beginning December 31, 2011.

(xii) "Reporting Event" means any of the following events, ~~if material,~~ with respect to any of the Outstanding Notes:

(A) Principal and interest payment delinquencies;

(B) Non-payment related defaults, if material;

(C) Unscheduled draws on debt service reserves reflecting financial difficulties;

(D) Unscheduled draws on credit enhancements reflecting financial difficulties;

(E) Substitution of credit or liquidity providers or their failure to perform;

(F) Adverse tax opinions, the issuance by the Internal Revenue Service of proposed or final determinations of taxability, Notice of Proposed Issue (IRS Form 5701-TEB) or other material notices or determinations with respect to the tax status of the security, or other material events affecting the tax status of the security;

(G) Modifications to rights of security holders, if material;

(H) Note calls, if material, and tender offers;

(I) Defeasances;

(J) Release, substitution, or sale of property securing repayment of the securities, if material;

(K) Rating changes;

(L) Bankruptcy, insolvency, receivership or similar event of the obligated person;

(M) The consummation of a merger, consolidation, or acquisition involving an obligated person or the sale of all or substantially all of the assets of the obligated person, other than in the ordinary course of business, the entry into a definitive agreement to undertake such an action or the termination of a definitive agreement relating to any such actions, other than pursuant to its terms, if material;

(N) Appointment of a successor or additional trustee or the change of name of a trustee, if material.

(xiii) "Reporting Event Notice" means notice in Prescribed Form in accordance with EMMA of a Reporting Event.

(2) The City, as an “obligated person” within the meaning of the Rule, undertakes to provide the following information, at the times and to the recipients as provided in this Section 2.05.010(d):

(i) Annual Financial Information;

(ii) Audited Financial Statements; and,

(iii) Reporting Event Notices.

(3) So long as the Rule continues to require an undertaking to make ongoing disclosure as established herein, or performance of prior such undertakings, then, with respect to all of the Notes issued subject to such requirements which remain Outstanding:

(i) The City shall provide the Annual Financial Information in Prescribed Form in accordance with EMMA to the MSRB, on or before the Report Date. The City may adjust the Report Date if the City changes its fiscal year by providing written notice of the change of fiscal year and the new Report Date to the MSRB; provided that the new Report Date shall~~ be~~ not exceed ~~on~~one year ~~form~~from the end of the new fiscal year and provided further that the period between the final Report Date relating to the former fiscal year and the initial Report Date relating to the new fiscal year shall not exceed one year in duration. It shall be sufficient if the City provides to the MSRB the Annual Financial Information by specific reference to documents available to the public on the MSRB's Internet Web site, or filed with the SEC.

(ii) If not provided as part of the Annual Financial Information, the City shall provide the Audited Financial Statements when and if available to the MSRB in Prescribed Form in accordance with EMMA.

(iii) If a Reporting Event occurs, the City shall file a Reporting Event Notice in a timely manner not in excess of ten business days after the occurrence of the event in Prescribed Form in accordance with EMMA with the MSRB. Each "Reporting Event Notice" shall be so captioned, and shall prominently state the date, title and CUSIP numbers of the Notes to which the Reporting Event(s) covered by the Reporting Event Notice pertain(s).

(iv) The City shall provide in Prescribed Form in accordance with EMMA in a timely manner to the MSRB notice of any failure by the City to provide Annual Financial Information on or before the Report Date to the MSRB as required by the terms of this Section 2.05.010(d).

(4) The information listed in Subsection (d)(2) shall be provided by the City to the MSRB, at www.emma.msrb.org, in the Prescribed Form or to such other location and by such other method of transmitting information that is approved by the SEC.

(5) This Section 2.05.010(d) or any provision hereof, shall be subject to nullification and repeal in the event that the City first delivers to the MSRB, an opinion of nationally recognized bond counsel to the effect that those portions of the Rule that require this Section 2.05.010(d) as a condition for particular underwriter conduct, or any such provision, are invalid, have been repealed retroactively or otherwise do not apply to the Notes. This Section 2.05.010(d) may be amended without the consent of the holders or beneficial owners of any Note(s), following the delivery by the City to the MSRB, of the proposed amendment and the opinion of nationally recognized bond counsel to the effect that such amendment, and giving effect thereto, will not adversely affect the adequacy of this Section 2.05.010(d) or the adequacy of the City's subsequent conduct for purposes of compliance with the Rule, provided, however, that no such amendment will be made unless the following conditions are satisfied:

(i) The amendment may only be made in connection with a change in circumstances that arises from a change in legal requirements, change in law, or change in the identity, nature, or status of the City, or type of business conducted;

(ii) The undertaking, as amended, would have complied with the requirements of the Rule at the time of any primary offering to which the undertaking applies, after taking into account any amendments or interpretations of the Rule, as well as any change in circumstances;

(iii) The amendment does not materially impair the interests of holders, as determined either by parties unaffiliated with the City (such as the trustee or bond counsel) or by approving vote of holders of the Notes pursuant to the terms of the governing instrument(s) at the time of the amendment;

(iv) If the amendment changes the type of operating data or financial information provided pursuant to the City's undertaking, the Annual Financial Information containing the amended operating data or financial information will explain, in narrative form, the reasons for the amendment and the impact of the change in the type of operating data or financial information being provided; and,

(v) If the amendment alters portions of the City's undertaking specifying the accounting principles to be followed in preparing financial statements, the Annual Financial Information for the year in which the change is made will present a comparison between the financial statements or information prepared on the basis of the new accounting principles and those prepared on the basis of the former accounting principles, which comparison should include a qualitative (and to the extent reasonably feasible, quantitative) discussion of the differences in the accounting principles and the impact of the change in principles on the presentation of the financial information. A notice of the change in accounting principles will be sent to the MSRB.

(6) Any failure by the City to perform in accordance with this Section 2.05.010(d) shall not constitute an "Event of Default" or "Default" within the meaning of any ordinance(s) or resolution(s) authorizing the issuance of any of the Notes, and the rights and remedies provided to holders or beneficial owners of the Notes under such ordinance(s) or resolution(s) upon the occurrence of such a "Default" or such an "Event of Default" shall not apply to any such failure.

(7) If any of the foregoing provisions or terms of this Section 2.05.010(d), or any application thereof, is held invalid, the invalidity shall not affect other applications of the provisions or terms of this Section 2.05.010(d) which reasonably can be given effect without the invalid provision or term or the application thereof, and to this end, the provisions of this Section 2.05.010(d) are declared to be severab1e.

(8) None of the provisions of this Section 2.05.010(d) are in any way intended to impose upon, or result in an assumption by, the City or any of its officers, agents or employees, of any special duty or any civil law duty of care as to which any breach or alleged breach thereof could give rise to any claim for damages in tort, and the City hereby expressly disclaims any such duty or responsibility for damages, including (but not limited to) any direct, indirect, special or consequential damages. The provisions of this Section 2.05.010(d) shall not, in any way, create liability or a basis for liability on the part of the City or any officer or employee thereof for any damages that result from failure of the City to timely perform any portion, provision, term or

condition of the written undertaking on its part established herein, or for any damages that result from reliance upon any provision of this Section 2.05.010(d) or any administrative decision lawfully made thereunder. However, nothing in this subsection shall operate or be construed to limit the rights of any holder or beneficial owner of any Note to seek enforcement of the undertakings herein expressed through proceedings for a decree of specific performance in equity.

(9) This Section 2.05.010(d) shall inure solely to the benefit of the holders of the Notes as required by Section (b)(5)(i) of the Rule, and shall create no rights in any other person or entity.

(10) The City shall maintain records of all disclosure made pursuant to this Section 2.05.010(d), including the content of such disclosure, the names of the entities with whom such disclosure was filed and the date of filing such disclosure.

(11) The City may, from time to time, appoint or engage an agent to assist it in carrying out its obligations under this Section 2.05.010(d) and may discharge any such agent with or without appointing a successor agent.

(12) Nothing in this Section 2.05.010(d) shall be deemed to prevent the City from disseminating any other information, using the means of dissemination set forth in this subsection or any other means of communication, or including any other information in any Annual Financial Information or notice of occurrence of a Reporting Event in addition to that which is required by this Section 2.05.010(d). If the City chooses to include any information from any document or notice of occurrence of a Reporting Event in addition to that which is specifically required by this Section 2.05.010(d), the City shall not have any obligation under this Section 2.05.010(d) to update such information or include it in any future disclosure or notice of the occurrence of a Reporting Event.

SECTION 2. Ordinance 48-~~367,~~901, passed on ~~July 14, 2009,~~November 16, 2010, is hereby repealed in its entirety and replaced by this ordinance.

SECTION 3. This ordinance shall be included in the Code of the City of Wichita, Kansas, and shall be effective upon its passage and publication once in the official city newspaper.

[Remainder of page intentionally left blank]

PASSED by the Governing Body of the City of Wichita, Kansas this ~~November 16, 2010.~~September 13, 2011.

CITY OF WICHITA, KANSAS

_____
Carl Brewer, Mayor

Attest:

_____
Karen Sublett, City Clerk

(Seal)

Approved as to Form:

_____
Gary E. Rebenstorf, Director of Law

Document comparison by Workshare Professional on Wednesday, August 31, 2011 9:13:55 AM

Input:	
Document 1 ID	C:\NetDocs\ordinance note disclosure Wichita 2010.doc
Description	C:\NetDocs\ordinance note disclosure Wichita 2010.doc
Document 2 ID	C:\NetDocs\ordinance amending note disclosure ordinance 2011.doc
Description	C:\NetDocs\ordinance amending note disclosure ordinance 2011.doc
Rendering set	kutak option 1

Legend:	
Insertion	
~~Deletion~~	
~~Moved from~~	
Moved to	
Style change	
Format change	
~~Moved deletion~~	
Inserted cell	
Deleted cell	
Moved cell	
Split/Merged cell	
Padding cell	

Statistics:	
	Count
Insertions	11
Deletions	13
Moved from	0
Moved to	0
Style change	0
Format changed	0
Total changes	24

Agenda Item No.

City of Wichita
City Council Meeting
September 13, 2011

TO: Mayor and City Council

SUBJECT: Amendments to the City of Wichita Residential Building Code (Title 18.51) to adopt revised foundation, basement and slab-on-grade construction standards for one and two family dwellings

INITIATED BY: Office of Central Inspection

AGENDA: New Business

Recommendation: Approve first reading of the ordinance amending the City of Wichita's Residential Building Code (Chapter 18.51 of the Code of the City of Wichita) to adopt the *Wichita Foundation, Basement and Slab-on-Grade Standards for One and Two Family Dwellings (August 30, 2011).*

Background: The City's current Residential Building Code (Chapter 18.51 of the Code of the City of Wichita) adopts the 2006 Edition of the International Residential Code (IRC), a national model building code developed and published by the International Code Council. Nationally, most jurisdictions with building codes use this model code as the basis for local ordinances. The 2006 Edition of the IRC has been adopted in Chapter 18.51 of the Code of the City of Wichita with a number of local amendments.

In late 2010, Office of Central Inspection (OCI) staff, in conjunction with Sedgwick County Code Enforcement staff and the Wichita Area Builders Association (WABA), formed an ad hoc Residential Slab-on-Grade Construction Task Force to develop recommendations for revised residential slab-on-grade building codes and standards. The Task Force was assembled shortly after several single family slab-on-grade slab failures were discovered and documented in the southeast area of Wichita (where expansive clay soils are fairly common).

The primary objectives of the Task Force were to:

- review area soil types;
- review characteristics of various soil types, and soil characteristic effects on built residential structures;
- review typical weather conditions/patterns in the local area and the impact on soils and houses;
- review surface and subsurface drainage systems for foundations and slab-on-grade construction;
- review slab-on-grade construction techniques and standards used in the Sedgwick County area and in other parts of the country; and
- develop foundation and concrete slab-on-grade standards and construction techniques that could be recommended for adoption and enforcement by area jurisdictions.

The Task Force included a broad-based group of area building construction, building design and soil/geotechnical professionals, including:

- homebuilders and remodelers;
- structural and civil engineers;
- geo-technical experts & soils engineers;
- concrete and foundation contractors;
- architects; and
- City and County code officials and building inspectors.

The Task Force first met in December 2010. A Task Force Technical Subcommittee was assembled by early January 2011, and R. Tom Compton, AIA, was appointed Subcommittee Chairman. Both the general Task Force and the Subcommittee met numerous times between January and early July 2011, with presentations to other interested parties (for review/comment) made between May and July 2011. During the course of Task

Force and Subcommittee work, objectives broadened to include a review of existing adopted basement construction standards and garages attached to homes. The proposed *Wichita Foundation, Basement and Slab-on-Grade Standards for One and Two Family Dwellings* were finalized and released to the public in mid-July 2011.

On August 1, 2011, the proposed Standards were presented to the Board of Code Standards and Appeals (BCSA) for review, receipt of public comment and recommendation to the City Council. The BCSA recommended approval of the proposed *Wichita Foundation, Basement and Slab-on-Grade Standards for One and Two Family Dwellings* and their adoption by reference into the Residential Building Code (Title 18.51).

On August 16, 2011, the proposed *Wichita Foundation, Basement and Slab-on-Grade Standards for One and Two Family Dwellings* were presented by City staff and the Chairman of the Task Force Technical Subcommittee, R. Tom Compton, AIA, during a City Council workshop. After review and discussion, City Council directed staff to prepare an ordinance to adopt the recommended *Wichita Foundation, Basement and Slab-on-Grade Standards for One and Two Family Dwellings* to the City Council in September 2011.

Analysis: The amended ordinance adopts by reference the recommended *Wichita Foundation, Basement and Slab-on-Grade Standards for One and Two Family Dwellings (August 30, 2011).* New and/or enhanced code and standards include the following.

- New requirements for soil testing/analysis of existing native soil at each building pad site for one and two family buildings and additions, with:
  - a minimum of two soil samples, of specified minimum sample size and depth, taken from diagonal corner locations of the proposed building pad site (under habitable areas);
  - soils plasticity index testing/verification from a soils engineer or certified soils testing company; and
  - provision of a certified/verified soils analysis to the building official for permitting purposes.

  The soil test/analysis characteristics and plasticity index (PI) results will establish the minimum depth of footings, and the minimum foundation/slab design and installation standard (as specified in the proposed Standards). The PI of soil determines the potential for expansion and movement of soil over time based on the moisture content of the soil and the soil type. The proposed Standards are intended to generally address structural considerations relative to the various soil types present in the Wichita/Sedgwick County area.

- The minimum depth for foundation footings is increased from 24" (per International Residential Code regulations) to 30". The proposed Standards require footings significantly deeper than 30" as PI increases. When slab-on-grade residential structures are to be constructed on soils with a PI greater than 45, the footing, foundation and slab system must be designed and sealed by a Kansas-licensed structural engineer in order to obtain a building permit.

- Steel wire mesh and/or steel bars will be required in all slabs, with greater steel reinforcement required for soils with higher PI. Fiber concrete reinforcing material may still be used, *but only in addition to required steel reinforcement to control shrinkage*.

- Specific below slab fill materials and depths are established, depending on the soil analysis and required minimum footing/foundation design standards.

- Specific criteria and installation standards for fill materials, footing drainage fill materials and foundation backfill materials are established.

- Foundation and surface drainage design and maintenance are emphasized to minimize the potential for foundation and/or slab damage as a result of moisture infiltration.

- A new pre-slab concrete pour inspection is required in order to check and verify under-slab material placement and required minimum steel reinforcement.

- Additional requirements are established for concrete floor slab construction in attached garages (under-slab preparation and reinforcement).

Financial Considerations: There will be an additional concrete slab pre-pour inspection required. Otherwise, there are no additional City costs associated with adoption of the ordinance. It should be noted that the cost-per-square-foot valuation tables used to calculate the value of most new residential one and two family structures were modified in early 2011, which increased permit fees charged for most new one and two family dwellings and additions by 10% - 15%. There will be some additional costs to builders for soil testing/analysis ($100 - $300 per site) and additionally required site preparation and fill, concrete and reinforcing steel materials.

Goal Impact: This item impacts the Provide and Safe and Secure Community goal indicator by enhancing and clarifying minimum design and construction standards and inspection procedures for foundations, basements and slab-on-grade construction for one and two family dwellings.

Legal Considerations: The Law Department has reviewed and approved the adopting ordinance as to form.

Recommendation/Actions: It is recommended that the City Council approve first reading of the proposed ordinance amending the City's Residential Building Code (Chapter 18.51 of the Code of the City of Wichita) to adopt by reference the *Wichita Foundation, Basement and Slab-on-Grade Standards for One and Two Family Dwellings (August 30, 2011)*.

Attachments: (1) Delineated ordinance; (2) *Wichita Foundation, Basement and Slab-on-Grade Standards for One and Two Family Dwellings (August 30, 2011)*; and (3) *Supplement to Foundation and Slab-on-Grade Standards for Residential Structures*.

First Published in The Wichita Eagle on September 23, 2011 230100

CLEAN 8/30/2011

ORDINANCE NO. 49-085

AN ORDINANCE AMENDING AND REPEALING THE ORIGINAL OF SECTIONS 18.51.115, 18.51.390, 18.51.400, 18.51.402 and 18.51.420; AND CREATING SECTIONS 18.51.113, 18.51.382, 18.51.383, 18.51.384, 18.51.401 AND 18.51.401(a) OF TITLE 18.51 OF THE CODE OF THE CITY OF WICHITA, KANSAS.

ALL IN THE CODE OF THE CITY OF WICHITA, KANSAS AND PERTAINING TO THE RESIDENTIAL BUILDING CODE OF THE CITY OF WICHITA, KANSAS.

BE IT ORDAINED BY THE GOVERNING BODY OF THE CITY OF WICHITA, KANSAS:

SECTION 1. Section 18.51.113 of the Code of the City of Wichita, is hereby created to read as follows:

Section R301.1.1 of the *International Residential Code* of the City of Wichita is amended to read as follows:

R301.1.1 Alternative provisions. As an alternative to the requirements in Section R301.1 the following standards are permitted subject to the limitations of this code and the limitations therein. Where engineered design is used in conjunction with these standards the design shall comply with the *International Building Code*.

1. American Forest and Paper Association (AAF&PA) *Wood Frame Construction Manual* (WFCM).
2. American Iron and Steel Institute (AISI) *Standard for Cold-Formed Steel Framing – Prescriptive Method for One- and Two-Family Dwellings*

(COFS/PM) *with Supplement to Standard for Cold-Formed Steel Framing - Prescriptive Method for One- and Two-Family Dwellings*.

3. *The Wichita Foundation, Basement and Slab-on-Grade Standards for One and Two Family Dwellings (August 30, 2011).*

SECTION 2. Section 18.51.115 of the Code of the City of Wichita, is hereby amended to read as follows:

TableR301.2(1) of the *International Residential Code* of the City of Wichita is amended to read as follows:

Table R301.2(1) Climatic and Geographic Design Criteria. The Climatic and Geographic Design Criteria for building design shall be as provided in Table R301.2(1).

Table Inset:

TABLE R301.2(1)
CLIMATIC AND GEOGRAPHIC DESIGN CRITERIA

GROUND SNOW LOAD	WIND SPEED[d] (mph)	SEISMIC DESIGN CATEGORY[f]	SUBJECT TO DAMAGE FROM			WINTER DESIGN TEMP[e]	ICE BARRIER UNDERLAYMENT REQUIRED[h]	FLOOD HAZARDS[g]	AIR FREEZING INDEX[i]	MEAN ANNUAL TEMP[j]
			Weathering[a]	Frost line depth[b]	Termite[c]					
15	90	A	Severe	24 "	Mod./ Severe	-7^0 F.	No	Title 27.06	700	55/ 60

For SI: 1 pound per square foot = 0.0479kPa, I mile per hour = 0.447 m/s.

a. Weathering may require a higher strength concrete or grade of masonry than necessary to satisfy the structural requirements of this code. The weathering column shall be filled in with the weathering index (i.e., "negligible," "moderate" or "severe") for concrete as determined from the Weathering Probability Map [Figure R301.2(3)]. The grade of masonry units shall be determined from ASTM C 34, C 55, C 62, C 73, C 90, C 129, C 145, C 216 or C 652.

b. The frost line depth may require deeper footings than indicated in Figure R403.1(1). The jurisdiction shall fill in the frost line depth column with the minimum depth of footing below finish grade. For construction of one and two family dwelling habitable spaces, the *Wichita Foundation, Basement and Slab-on-Grade Standards for One and Two Family Dwellings* (August 30, 2011) shall apply.

c. The jurisdiction shall fill in this part of the table to indicate the need for protection depending on whether there has been any history of local subterranean termite damage.

d. The jurisdiction shall fill in this part of the table with the wind speed from the basic wind speed map [Figure R301.2(4)]. Wind exposure category shall be determined on a site-specific basis in accordance with Section R301.2.1.4.

e. The outdoor design dry-bulb temperature shall be selected from the columns of 97 ½ - percent values for winter from Appendix D of the *International Plumbing Code*. Deviations from the Appendix D temperatures shall be submitted to reflect local climates or local weather experience as determined by the building official.

f. The jurisdiction shall fill in this part of the table with the seismic design category determined from Section R301.2.2.1.

g. The jurisdiction shall fill in this part of the table with (a) the date of the jurisdiction's entry into the National Flood Insurance Program (date of adoption of the first code or ordinance for management of flood hazard areas), (b) the date(s) of the currently effective FIRM and FBFM, or other flood hazard map adopted by the community, as may be amended.

h. In accordance with Sections R905.2.7.a, R905.4.3.1, R905.5.3.1, R905.6.3.1, R905.7.3.1 and R905.8.3.1, where there has been a history of local damage from the effects of ice damming, the jurisdiction shall fill in this part of the table with "YES". Otherwise, the jurisdiction shall fill in this part of the table with "NO".

i. The jurisdiction shall fill in this part of the table with the 100-year return period freezing index (BF-days) from Figure R403.3(2) or from the 100-year (99%) value on the National Climatic Data Center data table "Air Freezing Index – USA Method (Base 32° Fahrenheit)" at www.ncdc.noaa.gov/fpsf.html.

j. The jurisdiction shall fill in this part of the table with the mean annual temperature from the National Climatic Data Center data table "Air Freezing Index – USA Method (Base 32° Fahrenheit)" at www.ncdc.noaa.gov/fpsf.html.

SECTION 3. Section 18.51.382 of the Code of the City of Wichita, is hereby created to read as follows:

Section R401.4 of the *International Residential Code* of the City of Wichita is amended to read as follows:

R401.4 Soil Tests. In areas likely to have expansive, compressible, shifting or other unknown soil characteristics, the building official shall determine whether to require a soil test and/or analysis to determine the soil's characteristics at a particular location. This test shall be made by an approved testing agency using an approved method. For construction of one and two family dwelling habitable spaces, a soil test/analysis shall be submitted prior to issuance of a building permit in accordance with the *Wichita Foundation, Basement and Slab-on-Grade Standards for One and Two Family Dwellings (August 30, 2011).* Soil analysis and/or testing

shall be verified and/or certified by the building permit applicant and the approved testing agency in a form approved by the building official.

SECTION 4. Section 18.51.383 of the Code of the City of Wichita, is hereby created to read as follows:

Section R403.1.1 of the *International Residential Code* of the City of Wichita is amended to read as follows:

R403.1.1. Minimum size. Minimum sizes for concrete and masonry footings shall be as set forth in Table R403.1 and Figure R403.1(1). For construction of one and two family dwelling habitable spaces, the *Wichita Foundation, Basement and Slab-on-Grade Standards for One and Two Family Dwellings (August 30,* 2011) shall apply.

The footing width, W, shall be based on the load-bearing value of the soil in accordance with Table R401.4.1. Spread footings shall be a least 6 inches (152 mm) thick. Footing projections, P, shall be at least 2 inches (51 mm) and shall not exceed the thickness of the footing. The size of footings supporting piers and columns shall be based on the tributary load and allowable soil pressure in accordance with Table R401.4.1. Footings for wood foundations shall be in accordance with the details set forth in Section R403.2, and Figures R403.1(2) and R403.1(3).

SECTION 5. Section 18.51.384 of the Code of the City of Wichita, is hereby created to read as follows:

Section R403.1.3.2 of the *International Residential Code* of the City of Wichita is amended to read as follows:

R403.1.3.2 Slabs-on-grade with turned-down footings and slabs-on-grade cast monolithically with a footing.

For slabs-on-grade with turned-down footings and slabs-on-grade cast monolithically with a footing, construction of one and two family dwelling habitable spaces shall comply with the *Wichita Foundation, Basement and Slab-on-Grade Standards for One and Two Family Dwellings (August 30, 2011).*

SECTION 6. Section 18.51.390 of the Code of the City of Wichita, is hereby amended to read as follows:

Section 403.1.4 of the *International Residential Code* of the City of Wichita is hereby amended to read as follows:

R403.1.4 Minimum depth. All exterior footings shall be placed at least 24 (610 mm) inches below the undisturbed ground surface. For construction of one and two family dwelling habitable spaces, the *Wichita Foundation, Basement and Slab-on-Grade Standards for One and Two Family Dwellings (August 30, 2011)* shall apply. Where applicable, the depth of the footings shall also conform to Section 403.1.4.1 through R 403.1.4.2.

SECTION 7. Section 18.51.400 of the Code of the City of Wichita, is hereby amended to read as follows:

Section R403.1.4.1 of the *International Residential Code* of the City of Wichita is amended to read as follows:

R403.1.4.1 Frost protection. Section 403.1.4.1 of the International Residential Code is amended to read as follows:

Frost Protection. Except where otherwise protected from frost, foundation walls, piers and other permanent supports of buildings and structures shall be protected from frost by one or more of the following methods:

1. Extended below the frost line specified in Table R301.2.(1), per amended Table footnote "b." and the *Wichita Foundation, Basement and Slab-on-Grade Standards for One and Two Family Dwellings (August 30, 2011)*;

2. Constructing in accordance with Section R403.3;

3. Constructing in accordance with ASCE 32; or

4. Erected on solid rock

Exceptions:

1. Protection of freestanding accessory structures with an area of 400 (36.2m^2) square feet or less of light-framed construction with an eave-height of 10 feet (3048mm) or less shall not be required.

2. Protection of freestanding accessory structures with an area 400 square feet (36.2m^2) or less of other than light-framed construction with an eave-height of 10 feet (3048mm) or less shall not be required.

Footings shall not bear on frozen soil. Frost depth in Wichita is 24 inches.

SECTION 8. Section 18.51.401 of the Code of the City of Wichita, is hereby created to read as follows:

Section R403.1.8 of the *International Residential Code* of the City of Wichita is amended to read as follows:

R403.1.8 Foundations on expansive soils. Foundations and floor slabs for buildings located on expansive soils shall be designed in accordance with Section 1805.8 of the

International Building Code or as specified in the *Wichita Foundation, Basement and Slab-on-Grade Standards for One and Two Family Dwellings (August 30, 2011).*

SECTION 9. Section 18.51.402 of the Code of the City of Wichita, is hereby amended to read as follows:

Section R404.1 of the *International Residential Code* of the City of Wichita is amended to read as follows:

R404.1 Concrete and masonry foundation walls. Concrete and masonry foundation walls shall be selected and constructed in accordance with the provisions of Section R404 or in accordance with ACI 318, ACI 332, and NCMATR68–A or ACI 530/ASCE 5/TMS 402 or other approved structural standards. The *Wichita Foundation, Basement and Slab-on-Grade Standards for One and Two Family Dwellings (August 30, 2011)* may be used to comply with the requirements of this section, but do not preclude the right of the Office of Central Inspection to require a footing/foundation to be designed by a Kansas licensed architect or engineer.

Pre-engineered foundation wall systems such as insulated concrete forms (ICF walls) shall be installed to comply with the manufacturer's specifications or with architect or engineer requirements. All specifications or design documents shall be on site for each required inspection.

When ACI 318, ACI 332 or ACI 530/ASCE 5/TMS 402 or the provisions of Section R404 are used to design concrete or masonry foundation walls, project drawings, typical details and specifications are not required to bear the seal of the architect or engineer responsible for design, unless otherwise required by the state law of the jurisdiction having authority.

Foundation walls that meet all of the following shall be considered laterally supported:

1. Full basement floor shall be a minimum 3.5 inches (89 mm) thick concrete slab poured tight against the bottom of the foundation wall.
2. Floor joists and blocking shall be connected to the sill plate at the top of wall by the prescriptive method called out in Table R404.1(1), or; shall be connected with an approved connector with listed capacity meeting Table R404.1(1).
3. Bolt spacing for the sill plate shall be no greater than per Table R404.1(2).
4. Floor shall be blocked perpendicular to the floor joists. Blocking shall be full depth within two joist spaces of the foundation wall, and be flat-blocked with minimum 2-inch by 4-inch (51mm by 102mm) blocking elsewhere.
5. Where foundation walls support unbalanced load on opposite sides of the building, such as a daylight basement, the building aspect ratio, L/W, shall not exceed the value specified in Table R404.1(3). For such foundation walls, the rim board shall be attached to the sill with a 20 gage metal angle clip at 24 inches (610 mm) on center, with five 8d nails per leg, or an approved connector supplying 230 pounds per linear foot (3.36 kN/m) capacity.

SECTION 10. Section 18.51.420 of the Code of the City of Wichita, is hereby amended to read as follows:

Section R506.1 of the *International Residential Code* of the City of Wichita is amended to read as follows:

R506.1 General. Concrete slab-on-grade floors shall be a minimum 3.5 inches (89 mm) thick and designed and installed in accordance with the *Wichita Foundation, Basement and Slab-on-Grade Standards for One and Two Family Dwellings (August 30, 2011).*

SECTION 11. The ordinance shall be included in the Code of the City of Wichita, Kansas, and shall be effective upon publication once in the official paper.

ADOPTED at Wichita, Kansas, this 20th day of September, 2011.

_____
Carl Brewer, Mayor

ATTEST:

_____
Karen Sublett, City Clerk

Approved as to form:

_____
Gary E. Rebenstorf, Director of Law

First Published in The Wichita Eagle on _____

DELINEATED 8/30/2011

ORDINANCE NO.

AN ORDINANCE AMENDING AND REPEALING THE ORIGINAL OF SECTIONS 18.51.115, 18.51.390, 18.51.400, 18.51.402 and 18.51.420; AND CREATING SECTIONS 18.51.113, 18.51.382, 18.51.383, 18.51.384, 18.51.401 AND 18.51.401(a) OF TITLE 18.51 OF THE CODE OF THE CITY OF WICHITA, KANSAS.

ALL IN THE CODE OF THE CITY OF WICHITA, KANSAS AND PERTAINING TO THE RESIDENTIAL BUILDING CODE OF THE CITY OF WICHITA, KANSAS.

BE IT ORDAINED BY THE GOVERNING BODY OF THE CITY OF WICHITA, KANSAS:

SECTION 1. Section 18.51.113 of the Code of the City of Wichita, is hereby created to read as follows:

Section R301.1.1 of the *International Residential Code* of the City of Wichita is amended to read as follows:

R301.1.1 Alternative provisions. As an alternative to the requirements in Section R301.1 the following standards are permitted subject to the limitations of this code and the limitations therein. Where engineered design is used in conjunction with these standards the design shall comply with the *International Building Code*.

1. American Forest and Paper Association (AAF&PA) *Wood Frame Construction Manual* (WFCM).
2. American Iron and Steel Institute (AISI) *Standard for Cold-Formed Steel Framing – Prescriptive Method for One- and Two-Family Dwellings*

(COFS/PM) *with Supplement to Standard for Cold-Formed Steel Framing - Prescriptive Method for One- and Two-Family Dwellings*.

3. *The Wichita Foundation, Basement and Slab-on-Grade Standards for One and Two Family Dwellings (August 30, 2011).*

SECTION 2. Section 18.51.115 of the Code of the City of Wichita, is hereby amended to read as follows:

TableR301.2(1) of the *International Residential Code* of the City of Wichita is amended to read as follows:

Table R301.2(1) Climatic and Geographic Design Criteria. The Climatic and Geographic Design Criteria for building design shall be as provided in Table R301.2(1).

Table Inset:

TABLE R301.2(1)
CLIMATIC AND GEOGRAPHIC DESIGN CRITERIA

GROUND SNOW LOAD	WIND SPEED[d] (mph)	SEISMIC DESIGN CATEGORY[f]	SUBJECT TO DAMAGE FROM			WINTER DESIGN TEMP[e]	ICE BARRIER UNDERLAYMENT REQUIRED[h]	FLOOD HAZARDS[g]	AIR FREEZING INDEX[i]	MEAN ANNUAL TEMP[j]
			Weathering[a]	Frost line depth[b]	Termite[c]					
15	90	A	Severe	24 "	Mod./ Severe	-7^0 F.	No ~~Yes~~	Title 27.06	700	55/ 60

For SI: 1 pound per square foot = 0.0479kPa, I mile per hour = 0.447 m/s.

a. Weathering may require a higher strength concrete or grade of masonry than necessary to satisfy the structural requirements of this code. The weathering column shall be filled in with the weathering index (i.e., "negligible," "moderate" or "severe") for concrete as determined from the Weathering Probability Map [Figure R301.2(3)]. The grade of masonry units shall be determined from ASTM C 34, C 55, C 62, C 73, C 90, C 129, C 145, C 216 or C 652.

b. The frost line depth may require deeper footings than indicated in Figure R403.1(1). The jurisdiction shall fill in the frost line depth column with the minimum depth of footing below finish grade. For construction of one and two family dwelling habitable spaces, the *Wichita Foundation, Basement and Slab-on-Grade Standards for One and Two Family Dwellings* (August 30, 2011) shall apply.

c. The jurisdiction shall fill in this part of the table to indicate the need for protection depending on whether there has been any history of local subterranean termite damage.

d. The jurisdiction shall fill in this part of the table with the wind speed from the basic wind speed map [Figure R301.2(4)]. Wind exposure category shall be determined on a site-specific basis in accordance with Section R301.2.1.4.

e. The outdoor design dry-bulb temperature shall be selected from the columns of 97 ½ - percent values for winter from Appendix D of the *International Plumbing Code*. Deviations from the Appendix D temperatures shall be submitted to reflect local climates or local weather experience as determined by the building official.

f. The jurisdiction shall fill in this part of the table with the seismic design category determined from Section R301.2.2.1.

g. The jurisdiction shall fill in this part of the table with (a) the date of the jurisdiction's entry into the National Flood Insurance Program (date of adoption of the first code or ordinance for management of flood hazard areas), (b) the date(s) of the currently effective FIRM and FBFM, or other flood hazard map adopted by the community, as may be amended.

h. In accordance with Sections R905.2.7.a, R905.4.3.1, R905.5.3.1, R905.6.3.1, R905.7.3.1 and R905.8.3.1, where there has been a history of local damage from the effects of ice damming, the jurisdiction shall fill in this part of the table with "YES". Otherwise, the jurisdiction shall fill in this part of the table with "NO".

i. The jurisdiction shall fill in this part of the table with the 100-year return period freezing index (BF-days) from Figure R403.3(2) or from the 100-year (99%) value on the National Climatic Data Center data table "Air Freezing Index – USA Method (Base 32° Fahrenheit)" at www.ncdc.noaa.gov/fpsf.html.

j. The jurisdiction shall fill in this part of the table with the mean annual temperature from the National Climatic Data Center data table "Air Freezing Index – USA Method (Base 32° Fahrenheit)" at www.ncdc.noaa.gov/fpsf.html.

SECTION 3. Section 18.51.382 of the Code of the City of Wichita, is hereby created to read as follows:

Section R401.4 of the *International Residential Code* of the City of Wichita is amended to read as follows:

R401.4 Soil Tests. In areas likely to have expansive, compressible, shifting or other unknown soil characteristics, the building official shall determine whether to require a soil test and/or analysis to determine the soil's characteristics at a particular location. This test shall be made by an approved testing agency using an approved method. For construction of one and two family dwelling habitable spaces, a soil test/analysis shall be submitted prior to issuance of a building permit in accordance with the *Wichita Foundation, Basement and Slab-on-Grade Standards for One and Two Family Dwellings (August 30, 2011).* Soil analysis and/or testing

shall be verified and/or certified by the building permit applicant and the approved testing agency in a form approved by the building official.

SECTION 4. Section 18.51.383 of the Code of the City of Wichita, is hereby created to read as follows:

Section R403.1.1 of the *International Residential Code* of the City of Wichita is amended to read as follows:

R403.1.1. Minimum size. Minimum sizes for concrete and masonry footings shall be as set forth in Table R403.1 and Figure R403.1(1). For construction of one and two family dwelling habitable spaces, the *Wichita Foundation, Basement and Slab-on-Grade Standards for One and Two Family Dwellings (August 30,* 2011) shall apply.

The footing width, W, shall be based on the load-bearing value of the soil in accordance with Table R401.4.1. Spread footings shall be a least 6 inches (152 mm) thick. Footing projections, P, shall be at least 2 inches (51 mm) and shall not exceed the thickness of the footing. The size of footings supporting piers and columns shall be based on the tributary load and allowable soil pressure in accordance with Table R401.4.1. Footings for wood foundations shall be in accordance with the details set forth in Section R403.2, and Figures R403.1(2) and R403.1(3).

SECTION 5. Section 18.51.384 of the Code of the City of Wichita, is hereby created to read as follows:

Section R403.1.3.2 of the *International Residential Code* of the City of Wichita is amended to read as follows:

R403.1.3.2 Slabs-on-grade ~~ground~~ with turned-down footings and slabs-on-grade cast monolithically with a footing. ~~Slabs-on-ground with turned-down footings shall have a minimum of one No. 4 bar at the top and bottom of the footing.~~

~~**Exception:** For slabs-on-ground cast monolithically with a footing, one No. 5 bar or two No. 4 bars shall be located in the middle third of the footing depth.~~

For slabs-on-grade with turned-down footings and slabs-on-grade cast monolithically with a footing, construction of one and two family dwelling habitable spaces shall comply with the *Wichita Foundation, Basement and Slab-on-Grade Standards for One and Two Family Dwellings (August 30, 2011).*

SECTION 6. Section 18.51.390 of the Code of the City of Wichita, is hereby amended to read as follows:

Section 403.1.4 of the *International Residential Code* of the City of Wichita is hereby amended to read as follows:

R403.1.4 Minimum depth. All exterior footings shall be placed at least 24 (610 mm) inches below the undisturbed ground surface. For construction of one and two family dwelling habitable spaces, the *Wichita Foundation, Basement and Slab-on-Grade Standards for One and Two Family Dwellings (August 30, 2011)* shall apply. Where applicable, the depth of the footings shall also conform to Section 403.1.4.1 through R 403.1.4.2.

SECTION 7. Section 18.51.400 of the Code of the City of Wichita, is hereby amended to read as follows:

Section R403.1.4.1 of the *International Residential Code* of the City of Wichita is amended to read as follows:

R403.1.4.1 Frost protection. Section 403.1.4.1 of the International Residential Code is amended to read as follows:

Frost Protection. Except where otherwise protected from frost, foundation walls, piers and other permanent supports of buildings and structures shall be protected from frost by one or more of the following methods:

1. Extended below the frost line specified in Table R301.2.(1), per amended Table footnote "b." and the *Wichita Foundation, Basement and Slab-on-Grade Standards for One and Two Family Dwellings (August 30, 2011)*;
2. Constructing in accordance with Section R403.3;
3. Constructing in accordance with ASCE 32; or
4. Erected on solid rock

Exceptions:

1. Protection of freestanding accessory structures with an area of ~~600~~ 400 (36.2m^2) square feet or less of light-framed construction with an eave-height of 10 feet (3048mm) or less shall not be required.

2. Protection of freestanding accessory structures with an area 400 square feet (~~37~~36.2m^2) or less of other than light-framed construction with an eave-height of 10 feet (3048mm) or less shall not be required.

Footings shall not bear on frozen soil. Frost depth in Wichita is 24 inches.

SECTION 8. Section 18.51.401 of the Code of the City of Wichita, is hereby created to read as follows:

Section R403.1.8 of the *International Residential Code* of the City of Wichita is amended to read as follows:

R403.1.8 Foundations on expansive soils. Foundations and floor slabs for buildings located on expansive soils shall be designed in accordance with Section 1805.8 of the *International Building Code* or as specified in the *Wichita Foundation, Basement and Slab-on-Grade Standards for One and Two Family Dwellings (August 30, 2011)*.

~~**Exception:** Slab-on-ground and other foundation systems which have performed adequately in soil conditions similar to those encountered at the building site are permitted subject to the approval of the building official.~~

SECTION 9. Section 18.51.402 of the Code of the City of Wichita, is hereby amended to read as follows:

Section R404.1 of the *International Residential Code* of the City of Wichita is amended to read as follows:

R404.1 Concrete and masonry foundation walls. Concrete and masonry foundation walls shall be selected and constructed in accordance with the provisions of Section R404 or in accordance with ACI 318, ACI 332, and NCMATR68–A or ACI 530/ASCE 5/TMS 402 or other approved structural standards. ~~The "Basement Standards for One and Two Family Dwellings prepared by Central Inspection Division September, 1988"~~ The *Wichita Foundation, Basement and Slab-on-Grade Standards for One and Two Family Dwellings (August 30, 2011)* may be used to comply with the requirements of this section,~~;~~ but do not preclude the right of the Office of Central Inspection to require a footing/foundation to be designed by a Kansas licensed architect or engineer.

Pre-engineered foundation wall systems such as insulated concrete forms (ICF walls) shall be installed to comply with the manufacturer's specifications or with architect or engineer

requirements. All specifications or design documents shall be on site for each required inspection.

When ACI 318, ACI 332 or ACI 530/ASCE 5/TMS 402 or the provisions of Section R404 are used to design concrete or masonry foundation walls, project drawings, typical details and specifications are not required to bear the seal of the architect or engineer responsible for design, unless otherwise required by the state law of the jurisdiction having authority.

Foundation walls that meet all of the following shall be considered laterally supported:

1. Full basement floor shall be a minimum 3.5 inches (89 mm) thick concrete slab poured tight against the bottom of the foundation wall.
2. Floor joists and blocking shall be connected to the sill plate at the top of wall by the prescriptive method called out in Table R404.1(1), or; shall be connected with an approved connector with listed capacity meeting Table R404.1(1).
3. Bolt spacing for the sill plate shall be no greater than per Table R404.1(2).
4. Floor shall be blocked perpendicular to the floor joists. Blocking shall be full depth within two joist spaces of the foundation wall, and be flat-blocked with minimum 2-inch by 4-inch (51mm by 102mm) blocking elsewhere.
5. Where foundation walls support unbalanced load on opposite sides of the building, such as a daylight basement, the building aspect ratio, L/W, shall not exceed the value specified in Table R404.1(3). For such foundation walls, the rim board shall be attached to the sill with a 20 gage metal angle clip at 24 inches (610 mm) on center, with five 8d nails per leg, or an approved connector supplying 230 pounds per linear foot (3.36 kN/m) capacity.

SECTION 10. Section 18.51.420 of the Code of the City of Wichita, is hereby amended to read as follows:

Section R506.1 of the *International Residential Code* of the City of Wichita is amended to read as follows:

R506.1 General. Concrete slab-on-grade ~~ground~~ floors shall be a minimum 3.5 inches (89 mm) thick and designed and installed in accordance with the *Wichita Foundation, Basement and Slab-on-Grade Standards for One and Two Family Dwellings (August 30, 2011)*.

SECTION 11. The ordinance shall be included in the Code of the City of Wichita, Kansas, and shall be effective upon publication once in the official paper.

ADOPTED at Wichita, Kansas, this _____day of _____, 2011.

_____
Carl Brewer, Mayor

ATTEST:

_____
Karen Sublett, City Clerk

Approved as to form:

_____
Gary E. Rebenstorf, Director of Law

SUPPLEMENT TO FOUNDATION & SLAB-ON-GRADE STANDARDS FOR RESIDENTIAL STRUCTURES

The *"Foundation And Slab-On-Grade Standards For Residential Structures"* (*Standards*) include soils-related requirements to reduce the potential for soil movement that could cause severe distress of the structure. The purpose of this supplement is to provide additional information and measures to further reduce the potential for soil movement. The three areas discussed in this supplement are existing fill materials in the proposed building area, footing foundation soils, and the floor slab subgrade preparation.

The laboratory plasticity index testing of at least two samples per residence as required by the *Standards* and the measures discussed in this supplement are not intended to replace a geotechnical engineering report with soil borings and site specific recommendations. The contractor should consult an engineer when the site conditions present questionable circumstances such as existing fill, soft foundation bearing materials, and swell-susceptible clays. Failure to address these circumstances can result in excessive subgrade movement and severe distress of the structure.

1.0 EXISTING FILL MATERIALS

If a site contains existing fill materials where each 6- to 8-inch thick lift was tested by an engineer during the fill construction and each lift passed the appropriate requirements established by an engineer, then the fill is considered engineered fill, and the moisture and density test results shall be documented. If the site contains existing fill that has been placed without moisture and density control, then the fill should be considered uncontrolled and should be removed and reconstructed with moisture and density control. It should be the contractor's responsibility to retain an engineer to evaluate existing fill for suitability to support the proposed residence prior to placing additional fill or concrete.

Foundations and floor slabs supported on or above existing uncontrolled fill material that has not been uniformly placed and compacted with documentation to show moisture and density control may not perform predictably. This can result in excessive total and differential settlement and cause severe distress of the structure. The depth and composition of the existing fill materials can vary greatly over relatively small lateral and vertical distances. Because of this variability, it may not be possible to accurately predict the amount of fill that will need to be removed and replaced to develop suitable support for the proposed structure. The fill may be suitable for re-use as new controlled fill, provided it is properly moisture conditioned and compacted. However, the fill could contain materials (such as organics, rubble, or waste materials) that would render it unsuitable for re-use as new controlled fill. The contractor should be responsible to remove and replace unsuitable existing fill and to construct engineered fill with moisture and density control.

2.0 FOOTING FOUNDATION SOILS

The base of all foundation excavations should be free of water and loose soil prior to placing reinforcing steel and concrete. Concrete should be placed soon after excavating to reduce bearing soil disturbance. Care should be taken to prevent wetting or drying of the bearing materials during construction.

Extremely wet or dry material or any loose or disturbed material in the bottom of the footing excavations should be removed before foundation concrete is placed. Should the soils at bearing level become excessively dry, disturbed, saturated, or frozen, the affected soil should be removed prior to placing concrete. Consider placing a lean concrete mud-mat over the bearing soils following approval by the building official or engineer if the excavations must remain open over night or for an extended time.

Regarding construction of footings, there is a possibility that isolated zones of soft, low density fill or native soils could be encountered below footing bearing level. Therefore, the contractor should retain an engineer to observe, test, and evaluate the bearing capacity of the foundation soils prior to placing reinforcing steel and concrete to determine if additional footing excavation depth is needed.

If unsuitable bearing soils are encountered in footing excavations, the excavations should be extended deeper to suitable soils and the footings could bear directly on these soils at the lower level or on lean concrete backfill placed in the excavations.

3.0 FLOOR SLAB SUBGRADE

Expansive clays and clay-shales are present in many portions of Sedgwick County including the City of Wichita (primarily east of Hillside Avenue). Without appropriate construction procedures, these expansive materials can cause floor slab heave on the order of a few inches over time. The *Standards* provide procedures to help mitigate the effects of soil shrinkage and expansion. However, even if these procedures are followed, some movement and cracking in the structure should be anticipated. The severity of cracking and other damage such as uneven floor slabs will probably increase if any modification of the site results in excessive wetting or drying of the expansive soils. Eliminating the risk of movement and distress may not be feasible, but it may be possible to further reduce the risk of movement if significantly more expensive measures are used during construction. Some of these options include constructing a select fill zone, a deeper zone of moisture-conditioned soil, and/or constructing a structural slab, or a crawl space.

A factor affecting floor slab performance is the potential for the subgrade soils to swell due to variations in moisture content. Typically, some increase in the floor slab subgrade moisture content will occur because of gradual accumulation of capillary moisture, which would otherwise

evaporate if the floor slab had not been constructed. A soil's swell potential is dependent primarily on its plasticity and moisture content, and the confining pressure provided by the fill required to develop design grade. Subgrade soils with higher plasticity and lower moisture content and confining pressure, generally have greater swell potential.

Where near-surface subgrade soils with moderate to high plasticity are present, the near-surface clay materials generally have a potential to heave floor slabs supported on grade. This potential to swell would increase if drying of the clay materials occurs prior to, or during, construction. To reduce the swell potential to a relatively small amount, it is recommended that the upper subgrade zone below the floor slab be select fill material as described below. This is primarily to help protect any newly placed fill from moisture fluctuations during construction and provide a subgrade layer that will not experience volume change as the moisture content fluctuates.

The contractor should consult an engineer to evaluate the site-specific subgrade conditions with regard to the swell potential and determine the thickness of the select fill and moisture-conditioned zone below the structure. Depending on the plasticity of the subgrade materials and the in-place moisture content, the select-fill and moisture-conditioned zone could be up to several feet thick. The select fill should be placed by an earthwork contractor with moisture and density control and tested by an engineer.

The select fill materials to be used in the upper subgrade zone beneath the floor slab may include granular soils such as crushed concrete, crushed rock, including limestone screenings with a plasticity index less than 18, or possibly clayey sand containing less than 50% clay by dry weight of the material and a plasticity index less than 18. Geotechnical laboratory testing of prospective select fill materials proposed for use by the contractor should be conducted to confirm their suitability prior to construction.

Wichita Foundation, Basement and Slab-on-grade Standards
for ONE and TWO FAMILY DWELLINGS

Prepared for The City of Wichita, Kansas

Table of Contents — Sheet Index

Ref. Sym. TITLE PAGE AND FOUNDATION INDEX — PAGE 0.0

GENERAL NOTES: — PAGE 0.1
General notes for all details are located on this page keyed by a number designation, inside a hexagon symbol.

SOIL AND BACKFILL MATERIAL STANDARDS: — PAGE 0.2
Soil and Backfill notes for all details are located on this page keyed by a letter designation, inside a square symbol.

COMMON NOTES and FOUNDATION STANDARDS: — PAGE 0.2 & 0.3
General notes for all details are located on this page keyed by a letter & number designation, inside a triangle symbol.

FOUNDATION TYPE 1.0, Mono Pour Foundation & Slab: — PAGE 1.0
1.0 General MONO-POUR assembly standards.

FOUNDATION TYPE 2.0 Grade Beam & Slab: — PAGE 2.0
2.0 General GRADE BEAM & SLAB assembly standards.

FOUNDATION TYPE 3.0 Footing, Stem Wall & Slab: — PAGE 3.0
3.0 General FOOTING, STEM WALL & SLAB assembly standards.

FOUNDATION TYPE 3.1 Garage Frost Wall & Slab: — PAGE 3.1
3.1 Foundation for Garage Slab and Stem Wall

FOUNDATION TYPE 4.0 Basement Foundation: — PAGE 4.0
4.0 General BASEMENT assembly standards.

FOUNDATION TYPE 3.0 Walk-out Basement Slab Edges: — PAGE 3.0
BASEMENT SLAB EDGES & FOUNDATIONS at WALK-OUT PERIMETERS shall be constructed using Detail 1, Type 3.0a Stem Wall & Slab construction assembly criteria located on Page 3.0 of these standards)

FOUNDATION TYPE 5.0 Other Foundation Assemblies: — PAGE 5.0
5.0 General FOOTING AND STEM WALL for CRAWL SPACE

FOUNDATION SECTION & DETAIL STANDARDS: — PAGES 6.0 - 6.2
6.0 Supplemental and Alternative Details.

FOUNDATION & SLAB SITE CONDITIONS: — PAGE 7.0
This section addressed environmental impacts on foundation, slab placement and long term performance.

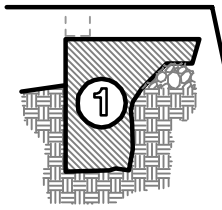

TYPE 1.0

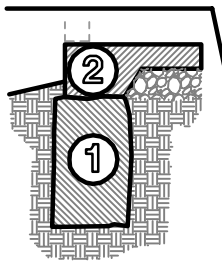

TYPE 2.0

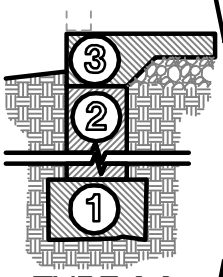

TYPE 3.0

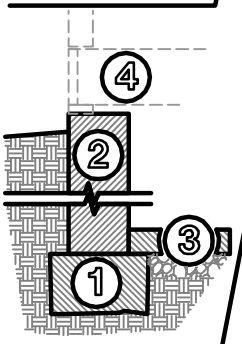

TYPE 4.0

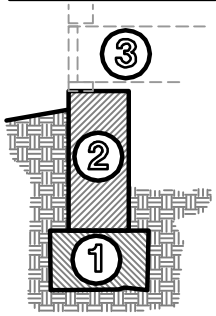

TYPE 5.0

IMPORTANT NOTE: Details in this reference material are not to scale. They are intended to represent general construction assemblies for the purpose of identifying minimum construction standards. As such, the contractor must evaluate each project and circumstance applying higher performance, as may be required, to insure that both the safety and quality of the final product reflects and promotes the integrity of the construction industry.

General Notes & Soil Standards

Project Inspection & Submittal Requirements

SITE & PROJECT STANDARDS:

01 STATEMENT OF PURPOSE

These guidelines for residential construction of concrete foundations and slabs represent minimum, code compliant, and recommended design standards. These standards include new construction and addititions to existing structures. These standards do not apply to non-inhabitable, detached, structures. It is always the responsibility of the contractor to evaluate the scope and circumstances of each project and retain professional advise on any areas of concern including foundation and slab design.

02 Slab-on-grade PROJECT SOIL ANALYSIS:

GENERAL MAKEUP OF EXISTING SITE SOILS: Native soil type and characteristics requires two (2) physical samples for testing. Each soil sample shall be approximately 8oz to 12oz sealed in a zip-lock plastic bag. Sample material shall be taken from 12" to 18" below grade of habitable living areas at diagonal corners within footprint of proposed structure or addition. Plasticity index (PI) report from soils engineer is required with permitting request. This PI report establishes the minimum required depth of footings below finish grade and will be attached to the permit application. (Important note: Soil sampling is not required for basement construction, walk-out basement construction or non-habitable structures and spaces such as garages, non-heated sheds, etc.)

03 PLASTICITY INDEX AND FOOTING DEPTH

THE IMPACT OF A SOILS PLASTICITY INDEX (PI) ON FOUNDATIONS: Native soil type and characteristics impact the performance of foundations. These variations in the soil effect frost depth, expansiveness, movement and are generally set in motion as a result of the amount of moisture these soil types subjected to. Variations of moisture levels can cause dramatic soil movement capable of damaging even well designed foundation systems. These design standards are intended to generally address the various soil types present in the Wichita / Sedgwick County geographical region. Refer to sheet 7.0.

04 SITE & FOUNDATION MOISTURE

THE CONTROL OF SURFACE DRAINAGE IS CRITICAL IN MINIMIZING THE POTENTIAL FOR FOUNDATION DAMAGE AS A RESULT OF MOISTURE: Proper building site pad elevation and strict adherence to the overall sub-division development drainage plan is mandatory. In the absence of such an engineered drainage plan it is recommended that professional input on building site development be retained. While many uncontrollable environmental factors influence soil (con't top) (con't) conditions including weather, vegetation and exposure, poorly sited buildings with poor drainage plans are most susceptible to water & foundation damage.

05 OWNER EDUCATION ON MAINTENANCE:

OWNERSHIP OF PROPERTIES REQUIRES UPKEEP AND MAINTENANCE: It is natural for soil materials at the perimeter of a building to settle over time. This settlement is ongoing and takes place over many years. In much the same up-keep sequence as painting, owners of properties should accept the fact that additional soil material will be required to maintain proper surface drainage. Good drainage away for the building perimeter, including downspout and sump pump extensions will minimize the threat of foundation problems resulting from water trapped against the slab or basement wall edges.

06 SITE CONDITIONS FOR PLACEMENT:

REFERENCE SHEET 7.0:
Soil "b" material acts as both a leveling element for the slab and as a buffer against the movement characteristics of Soil "a". Increasing the depth of Soil "b" with increased PI rating of below grade soils is ALWAYS recommended. Consult a professional if PI soil materials above 45 or if site conditions suggest questionable or inconsistant bearing performance circumstances.

07 FIBER REINFORCING:

Fiber materials are intended as a shrinkage and non-structural cracking control additive. These materials do not replace the requirements for steel reinforcing wire fabric materials or reinforcing bar, etc. Consult a Kansas design professional for recommendations on appropriate fiber material performance.

08 TECHNICAL INSTALLATION STANDARDS:

The contractor assumes responsibility for construction techniques, methods, standards and solutions implemented under his direction. He further assumes responsibility for recognizing and building in accordance with adopted codes, standards and guidelines as well as following the plans and specific recommendations of professionally prepared documents and specifications, if any, for a specific project. If criteria is found to be in conflict, use the more stringent standard or consult a Kansas design professional.

09 CONCRETE INSPECTIONS:

SLAB-ON-GRADE construction:
1) Footing: Trench, String-line perimeter & bearing;
2) Pre-Slab Pour: Sub-Grade, Grade Stakes, Reinforcing.
BASEMENT construction::
1) Footing: Footing & Rebar;
2) Wall: Sub-Grade, Grade Stakes, Reinforcing, Utilities;
3) Floor: Basement & Garage.
See City & County for detailed information & requirements.

Common Notes & Foundation Standards

Reference foundation drawings

SOIL & BACKFILL MATERIAL STANDARDS:

Soil a EXISTING SITE SOILS: See General note 02, for required analysis of local existing, native soil. This analysis is required in order to establish PI index which determines minimum required depth foundation assembly below finished grade.

Soil b BELOW SLAB FILL MATERIAL: COMPACTED Sand, Pea Gravel, or other approved Stabilizing Materials (i.e. AB3, etc).

Soil c FINISH GRADE MATERIAL: Topsoil. See Common note D2 for required slope away from foundation perimeter and Common note B3 for required dimension below top of concrete wall or finished slab elevation.

Soil d FOUNDATION BACKFILL MATERIAL: Backfill with loose, uniform soil preferably slightly damp. Use only material that is free from organic material, debris and large clumps (6" max.). Fill perimeter uniformly in lifts of 24" maximum. If additional soil materials from off site are required, soil shall be of same makeup as local material, Soil Type "a".

Soil e FOUNDATION FILL MATERIAL AT FOOTING DRAINAGE MATERIAL: Coarse washed sand or washed river rock. Do not use fine sand fill material on exterior drainage tile.

COMMON NOTES FOR FOUNDATION STANDARDS:

A1 Footings shall be continuous on all sides of structure with bearing in minimum 1500 psf undisturbed soil or a controlled and tested fill.

A2 Do not place patio or driveway slabs on the fill next to ANY wall unless supported either on supporting ledges, on dowels or by supporting columns carried down to the adjacent footings bottom.

A3 Ufer ground shall be installed in all structural footings. Contact inspection department for criteria for proper installation.

B1 Do not backfill an unsupported straight run of wall over 16' in length (Measured between corners and cross walls or supporting buttresses) unless adequate bracing is provided or the floor framing has been set in place and anchor bolts tightened. Reference details D1 & D2, sht 6.1.

B2 Backfill only against sufficiently reinforced and cured concrete. No heavy wheel loading adjacent to the wall shall be allowed. Basement walls are NOT designed as retaining walls, reference details A2, sht 6.0 for laterally unsupported wall design criteria.

B3 There shall be a minimum dimension from finished grade to top of concrete foundation or slab of 6" minimum. If sod is to be installed adjacent the foundation, this dimension shall be 8" minimum to allow for depth of sod material.

B4 Surround the drain tiles with 12" min., both depth & width, of coarse washed sands (Road gravel). Crushed limestone is not acceptable. All drain tile shall be 3" or 4" and covered with sock or filter cloth. See Soil Type "e".

B5 Excavated soil material shall not be used as fill below concrete slabs including garage slabs unless properly placed, and tested for bearing performance. Imported material used for fill below any slab shall be of soil type B or as specified by a licensed professional consultant. All fill shall be distributed below concrete slabs in layers, filling all voids, with each properly compacted in sequence.

B6 Vegitation and organic top soil material shall be completely removed from building site areas to receive concrete slab and foundation assemblies. Do not place below slab fill and preparation materials over organic materials.

C1 All concrete shall have a minimum 28 days compressive strength of 3500 psi for exterior slabs and 3000 psi for interior slabs, walls and footings.

C2 Concrete shall have a 5" maximum slump at the end of the chute or an 8" maximum slump if a high range water reducer is added.

D1 Exterior and Interior drain tiles shall be continuous around footings placed as illustrated with silt protective "sock". Interior and exterior systems shall be independent with no connection. Interior and Exterior systems may discharge into same sump pump pit or gravity flow to exterior discharge. Insure that the discharge location provides for positive drainage away from foundation edge. Mechanically pumped discharge should include pipe or solid trough that carries drain-water least past the original basement over-dig or 5' whichever is greater. (Ref Detail E2/6.1 for secondary sump installation option.)

(COMMON NOTES CONTINUED ON PAGE 0.3)

COMMON NOTES FOR FOUNDATION STANDARDS:

(COMMON NOTES CONTINUED FROM PAGE 0.2)

D2. To assure adequate drainage away from the foundation, grade away from the foundation shall slope at a recommended rate of 1" per ft. for 6 ft. minimum. Positive drainage shall then be maintained beyond in accordance with the development drainage plan. All drainage shall be maintained at a ¼" per ft. minimum. Use of soil type "c", organic top soil, is limited to 4" within 6' of perimeter to insure a positve drainage "cap" of native material below. Backfill below the topsoil layer, whether on-site or imported, materials, shall be consistant in make-up to existing local soil materials generally equal to Soil Type "a".

D3. Site irrigation systems adjacent foundations present a substancial source for the introduction of moisture into expansive sub-soils and resulting damage. Systems should be routinely balanced, inspected and maintained to limit and control this risk.

D4. Underslab utilites shall be installed with at least a 4" cover of compacted sand material between the bottom of the slab and top of ulility line.

E1. Basement walls above 9'-0" in height, measured from top of footing to top of concrete wall shall be designed and sealed by a Kansas design professional.

F1. Seal tie holes and cracks with fiber sealant before dampproofing.

F2. One coat dampproofing minimum shall be applied in soils with PI of 15 and below and two coats, or equivalent shall be applied in in all soil types with PI above 15. Waterproofing material shall extend from top of wall to base of wall and horizontally on top of footing to seal joint a wall base.

R1. All horizontal bars shall lap a minimum of 18" at ends, splices, and around corners.

R2. Set anchor bolts at the spacing shown on the wall sections in attached drawing, preferably set by templates secured to the forms before concrete is placed, to assure proper placement.

R3. The placement of vertical and horizontal steel shall be in accordance with specific foundation type standards documented in these standards. Reference foundation type.

R4. Reinforcing mesh shall overlap a minimum of 6" and shall extend to within 3" of perimeter edge of concrete .

R5. Where slab construction in poured adjacent foundation walls forming and unsupported "floating slab" (Similar to Det F1/6.2), ½" min. diameter reinforcing bars, 16" min. in length spaced at 32" max o.c., shall be drilled a minimum of 4" into perimeter bearing wall and extend into the center of the adjacent slab. Thicken edge of slab as required for 1½" coverage of rebar top and bottom. Rebar material may be smooth.

T1. The IRC/IECC-2006 requires minimum insulation performance at various elements of exterior construction assemblies. Foundation and Slab Insulation standards are included. Locally, energy standards are not officially inspected, however, Kansas Law *(KSA 66-1228)* requires that builder's must disclose to buyers the amount of insulation they installed beside the minimum value required by code on the Kansas Energy Efficiency Disclosure form. Energy Star ® requires insulation on all foundation types including slab-on-grade in our zone. If no insulation is installed as per the standard, a zero must be disclosed. The following table shows insulation values for the various types of foundations:

TABLE A - FOUNDATION INSULATION STANDARDS		
Kansas Zone 4 Climate (Sedgwick County & Surrounding Areas)		
Construction Type	Continuous or	Framing
* Foundation Insulation	R-10	R-13
Crawl Space Insulation	R-10	R-13
Slab Insulation	R-10 to a min 24" depth	

* See Detail E1/6.1 for basement foundation insulation options

T2. IRC/IECC-2006 code requires that exposed R10 insulation at slab edge be protected from damage and deterioration when installed. Install perimeter insulation system designed for this purpose or heavy gauge surface applied flashing or finishing material.

Mono Pour Foundation Type

Construction Standards

FOUNDATION TYPE 1.0 DETAIL NOTES:

(1a) Fndn Type 1.0 / Mono Pour Foundation type.

(2) For all note "2" dimensionsal standards (a thru d), reference the table on this page:

(3) Reference Soil & Backfill standards for these material types:
Soil a | Soil b | Soil c

(4) Reference specifically these Common Notes for type 1.0 fndn:
A1 thru A3 · B3 thru B6 · C1 · C2 · D2 thru D4 · R1 thru R5 · T1 · T2

(5) Steel Reinforcing and anchoring standards:
a) 3- #4 horizontal continuous at PI<16, 4- #4 at PI 16+.
b) #4 vertical @ 30" o.c. max. centers, center in footing. (Hook 24" into slab)
c) Anchor Bolts.
d) Slab reinforcement: 6x6-w1.4 x w1.4 WWF (6x6 - 10x10 mesh), center in slab.
e) Slab reinforcement: 6x6-w2.9 x w2.9 WWF in sheets (6x6 - 6x6 mesh), center in slab.
f) Slab reinforcement: #4 @ 24" o.c. each way, center in slab or approved post tensioning system.

(6) All foundations must extend 12" min. into undisturbed soil free of vegetation or into engineered controlled fill materials. Foundations or grade beams may also be supported on concrete piers extending into deeper bearing material. These systems to be designed and sealed by a Kansas design professional.

(7) Min. 2x4 PL w/ ½" dia. anchor embeded 7" into slab edge at 36" o.c. max. with washer & nut. One anchor within 12" of each end & splices. Optional anchors shall be designed and sealed by a Kansas design professional.

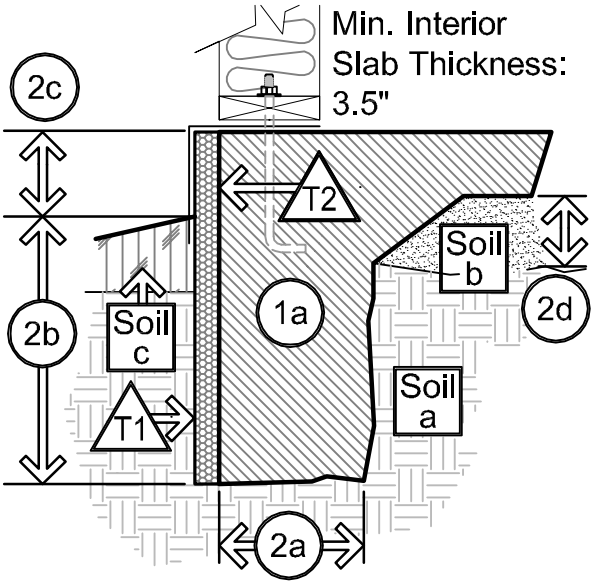

Dimension and Reinforcing Requirement Table / Type 1.0					
Soil Type a	(2a)	(2b)	(2c)	(2d)	Reinforcing
Sandy/Silts PI <16	8" min.	30" min.	6" min. above finish grade	4" min.	Ref detail #1 below
Sandy Clay/Clay PI 16 to 30	(12" at brick ledge)	36" min.		4" min.	Ref detail #2 below
Lean/Fat Clay PI 31 to 45		42" min.		6" min.	Ref detail #3 below

Consult a Kansas design professional where PI > 45.

Detail 1 / Type 1.0a

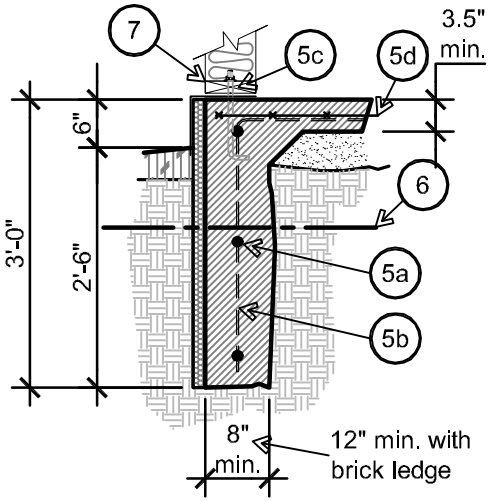

Type 1.0 / Mono Pour in PI<16 soil

Detail 2 / Type 1.0b

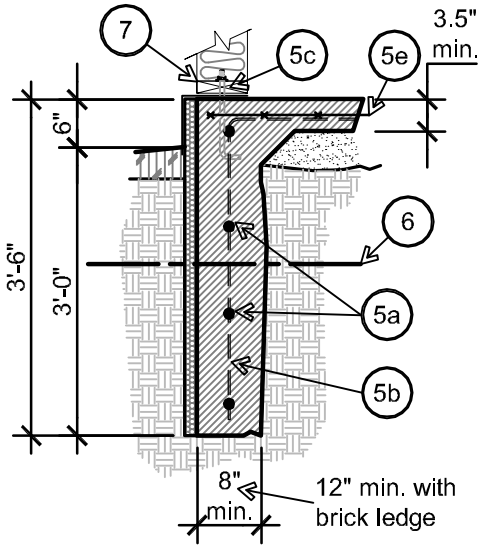

Type 1.0 / Mono Pour in PI 16 to 30 soil

Detail 3 / Type 1.0c

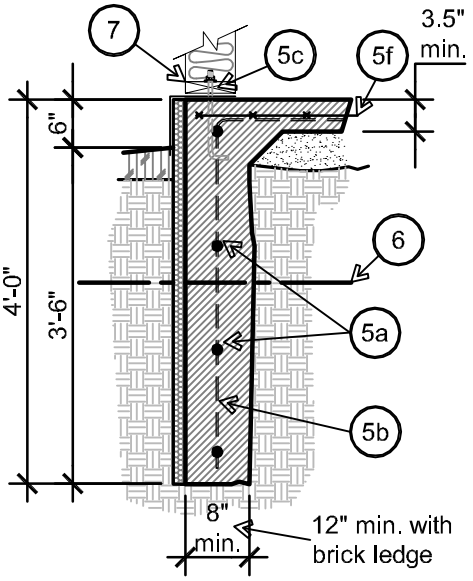

Type 1.0 / Mono Pour in PI 31 to 45 soil

Grade Beam Foundation Type

Construction Standards

FOUNDATION TYPE 2.0 DETAIL NOTES:

1a Fndn Type 2.0 / Grade Beam (Trench) & Slab placement.

1b 8" thickened edge slab.

2 For all note "2" dimensionsal standards (a thru g), reference the table on this page:

3 Reference Soil & Backfill standards for these material types:
Soil a | Soil b | Soil c

4 Reference specifically these Common Notes for type 2 fndn:
A1 thru A3 · B3 · C1 · C2 · D2 thru D4 · R1 thru R5 · T1 · T2

5 Steel Reinforcing and anchoring standards:
a) 3- #4 horizontal continuous at PI<16, 4- #4 at PI 16+.
b) #4 vertical @ 30" o.c. max. centers, centered in footing. (Hook 24" into slab)
c) Anchor Bolts.
d) Slab reinforcement: 6x6-w1.4 x w1.4 WWF (6x6 - 10x10 mesh), center in slab.
e) Slab reinforcement: 6x6-w2.9 x w2.9 WWF in sheets (6x6 - 6x6 mesh), center in slab.
f) Slab reinforcement: #4 @ 24" o.c. each way, center in slab or approved post tensioning system.

6 All foundations must extend 12" min. into undisturbed soil free of vegetation or into engineered controlled fill materials. Foundations or grade beams may also be supported on concrete piers extending into deeper bearing material. These systems shall be designed and sealed by a Kansas design professional.

7 Min. 2x4 PL w/ ½" dia. anchor embeded 7" into slab edge at 36" o.c. max. with washer & nut. One anchor within 12" of each end & splices. Optional anchors shall be designed and sealed by a Kansas design professional.

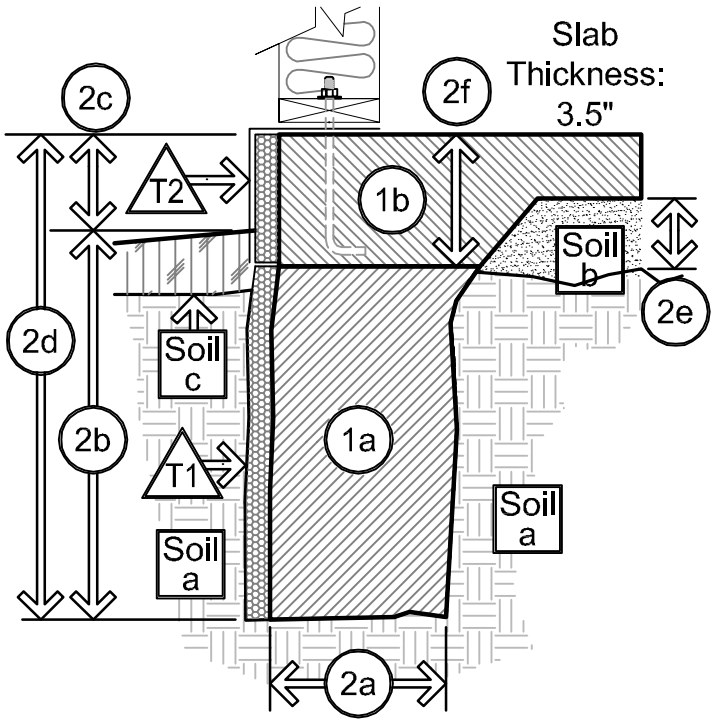

Dimension and Reinforcing Requirement Table / Type 2.0							
Soil Type a	(2a)	(2b)	(2c)	(2d)	(2e)	(2f)	Reinforcing
Sandy/Silts PI <16	8" min.	30" min.	6" min.	36" min.	4" min.	8" min.	Ref detail #1 below
Sandy Clay/Clay PI 16 to 30	(12" at	36" min.	6" min.	42" min.	4" min.	8" min.	Ref detail #2 below
Lean/Fat Clay PI 31 to 45	brick ledge)	42" min.	6" min.	48" min.	6" min.	8" min.	Ref detail #3 below

Consult a Kansas design professional where PI > 45.

Detail 1 / Type 2.0a

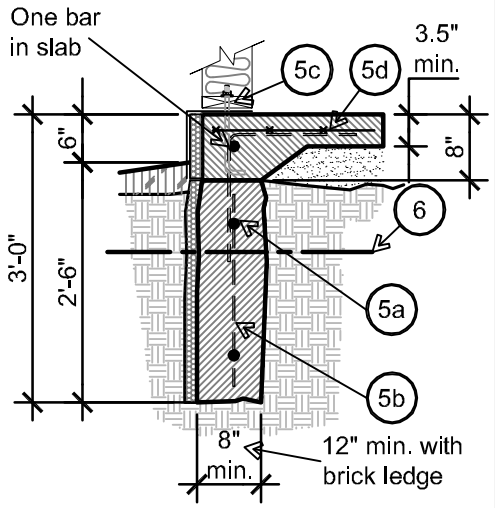

Type 2.0 / Grade Beam in PI<16 soil

Detail 2 / Type 2.0b

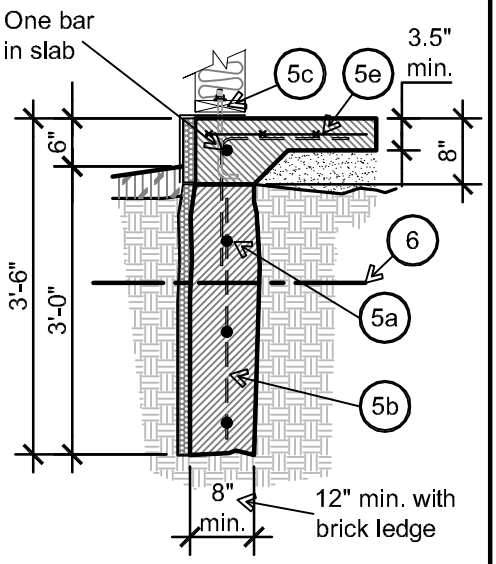

Type 2.0 / Grade Beam in PI 16 to 30 soil

Detail 3 / Type 2.0c

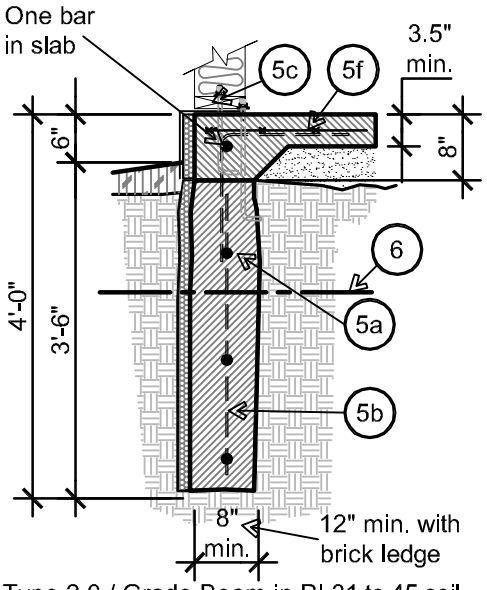

Type 2.0 / Grade Beam in PI 31 to 45 soil

Footing & Stem Wall Foundation

Construction Standards

FOUNDATION TYPE 3.0 DETAIL NOTES:

(1a) Fndn Type 3.0 / Footing (1b) Stemwall (1c) 8" thicken edge Slab.

(2) For all note "2" dimensionsal standards (a thru g), reference the table on this page:

(3) Reference Soil & Backfill standards for these material types: Soil a, Soil b, Soil c, Soil d

(4) Reference specifically these Common Notes for type 3 fndn:
A1 thru A3, B3, C1, C2, D2 thru D4, R1 thru R5, T1, T2

(5) Steel Reinforcing and anchoring standards:
a) 3- #4 horizontal continuous at PI<16, 4- #4 at PI 16+. One bar in slab.
b) #4 vertical @ 30" o.c. max. centers, center in wall. (Hook 24" into slab)
c) Anchor Bolts.
d) Slab reinforcement: 6x6-w1.4 x w1.4 WWF (6x6 - 10x10 mesh), center in slab.
e) Slab reinforcement: 6x6-w2.9 x w2.9 WWF in sheets (6x6 - 6x6 mesh), center in slab.
f) Slab reinforcement: #4 @ 24" o.c. each way, center in slab or approved post tensioning system.
g) #4 dowels @ 30" o.c. max. (dowels and verticals could be one piece) 6" leg at bottom.
h) 2-#4 cont. @ 1'-4" min. ftg. & 3-#4 cont. @1'8" min. ftg.

(6) All foundations must extend 12" min. into undisturbed soil free of vegetation or into engineered controlled fill materials. Foundations or grade beams may also be supported on concrete piers extending into deeper bearing material. These systems must be designed and sealed by a Kansas design professional.

(7) Min. 2x4 PL w/ ½" dia. anchor embeded 7" into slab edge at 36" o.c. max. with washer & nut. Optional anchors shall be designed and sealed by a Kansas design professional. One anchor within 12" of each end & splices.

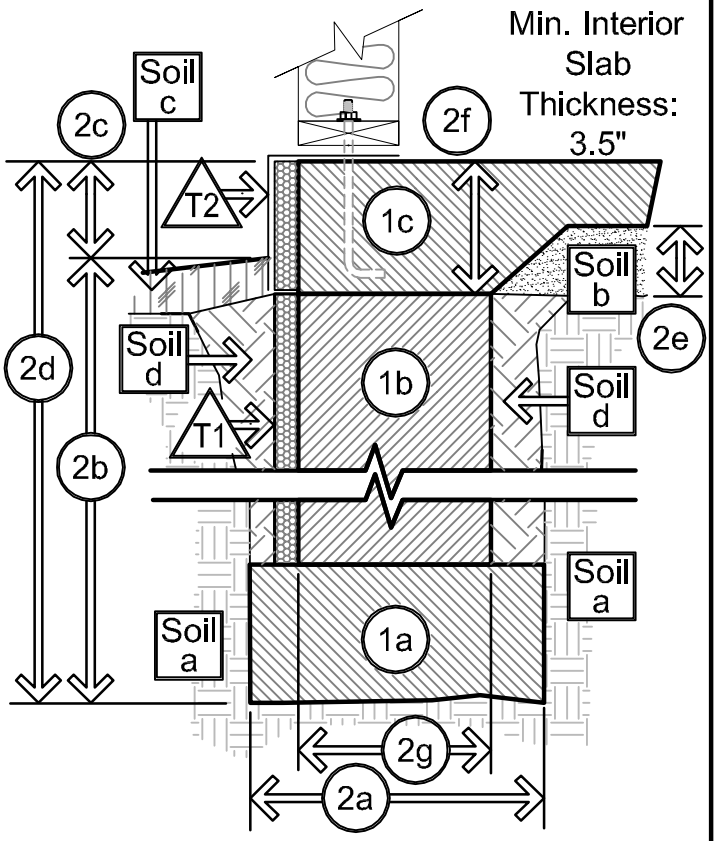

Dimension and Reinforcing Requirement Table / Type 3.0								
Soil Type a	(2a)	(2b)	(2c)	(2d)	(2e)	(2f)	(2g)	Reinforcing
Sandy/Silts PI <15	Dbl. wall dim. (See 2g)	30" min.	6" min.	36" min.	4" min.	8" min.	8" min. (10" min @ brick ledge)	Ref detail #1 below
Sandy Clay/ Clay PI 15 to 35		36" min.	6" min.	42" min.	4" min.	8" min.		Ref detail #2 below
Lean/Fat Clay PI>35		42" min.	6" min.	48" min.	6" min.	8" min.		Ref detail #3 below

Consult a Kansas design professional where PI > 45.

Detail 1 / Type 3.0a

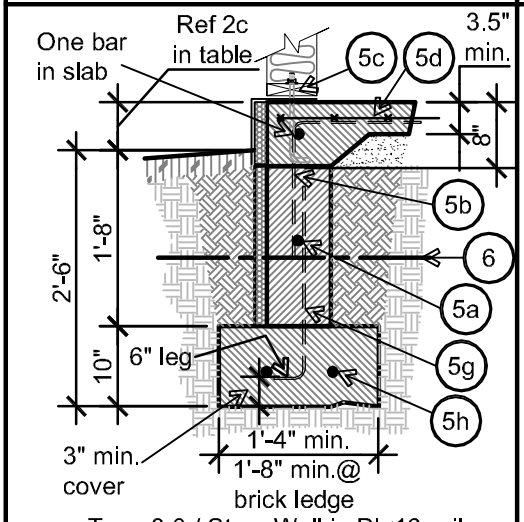

Type 3.0 / Stem Wall in PI<16 soil

(IMPORTANT NOTE: Use this detail, 3.0a, at all walk-out basement edges)

Detail 2 / Type 3.0b

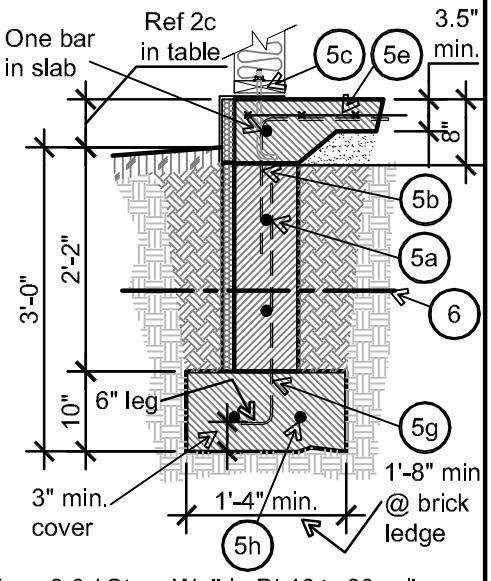

Type 3.0 / Stem Wall in PI 16 to 30 soil

Detail 3 / Type 3.0c

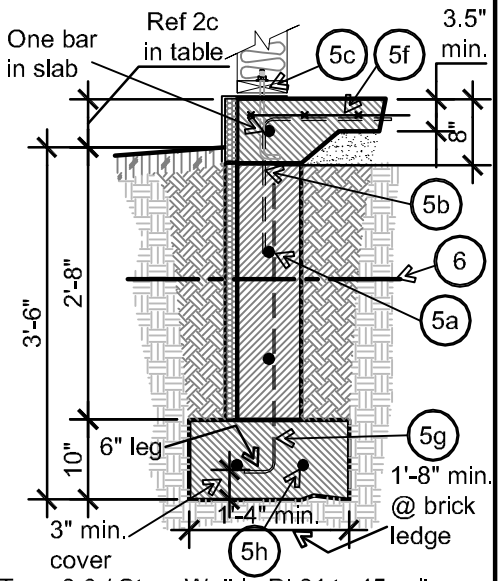

Type 3.0 / Stem Wall in PI 31 to 45 soil

Frost Wall at Garage Slab

Construction Standards

FOUNDATION TYPE 3.1 DETAIL NOTES:

1a Fndn Type 3.1 / Footing 1b Frost Wall 1c Slab at garage

2 For all note "2" dimensionsal standards (a thru g), reference the table on this page:

3 Reference Soil & Backfill standards for these material types:
Soil a | Soil b | Soil c | Soil d

4 Reference specifically these Common Notes for type 3.1 fndn:
A1 thru A3 · B3 · C1 · C2 · D2 thru D4 · R1 thru R5 · T1 · T2

5 Steel Reinforcing and anchoring standards:
a) 3- #4 horizontal continuous at PI<16, 4- #4 at PI 16+.
b) #4 vertical @ 30" o.c. max. centers. Center in upper wall. (Hook 24" into slab)
c) Anchor Bolts.
d) Slab reinforcement: 6x6-w1.4 x w1.4 WWF (6x6 - 10x10 mesh), center in slab.
e) Slab reinforcement: 6x6-w2.9 x w2.9 WWF in sheets (6x6 - 6x6 mesh), center in slab.
f) Slab reinforcement: #4 @ 24" o.c. each way, center in slab or approved post tensioning system.
g) #4 dowels @ 30" o.c. max. (dowels and verticals could be one piece)

6 All foundations must extend 12" min. into undisturbed soil free of vegetation or into engineered controlled fill materials. Foundations or grade beams may also be supported on concrete piers extending into deeper bearing material. These systems must be designed and sealed by a Kansas design professional.

7 Min. 2x4 PL w/ ½" dia. anchor embeded 7" into slab edge at 36" o.c. max. with washer & nut. One anchor within 12" of each end & splices. Optional anchors shall be designed and sealed by a Kansas design professional.

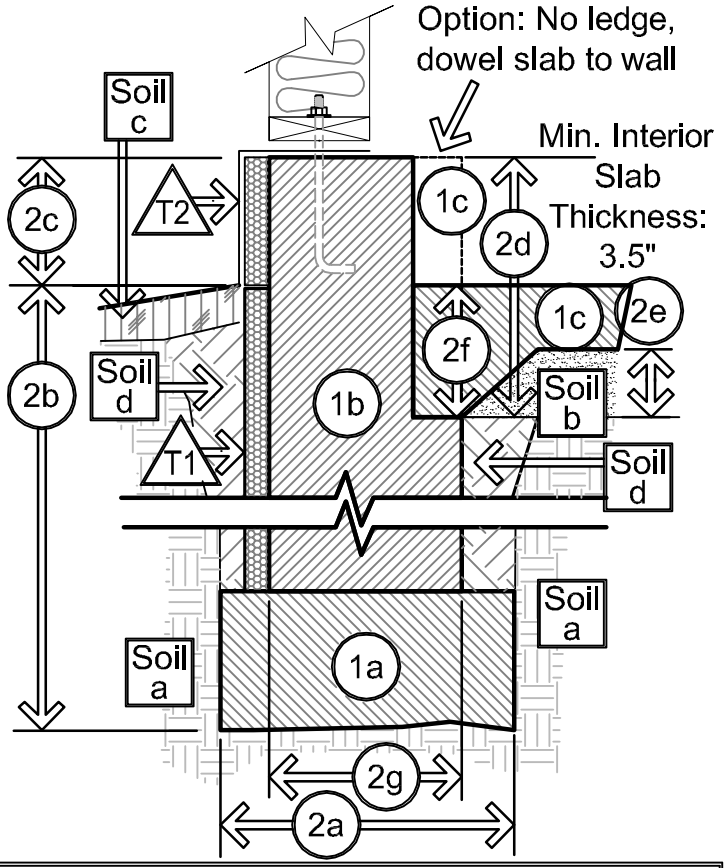

Dimension and Reinforcing Requirement Table / Type 3.1								
Soil Type a	(2a)	(2b)	(2c)	(2d)	(2e)	(2f)	(2g)	Reinforcing
Sandy/Silts PI <15	Dbl. wall dim. (See 2g)	30" min.	6" min.	16" min.	4" min.	8" min.	8" min.	Ref detail #1 below
Sandy Clay/ Clay PI 15 to 35		36" min.	6" min.		4" min.	8" min.		Ref detail #2 below
Lean/Fat Clay PI>35		42" min.	6" min.		6" min.	8" min.		Ref detail #3 below

Consult a Kansas design professional where PI > 45.

Detail 1 / Type 3.1a

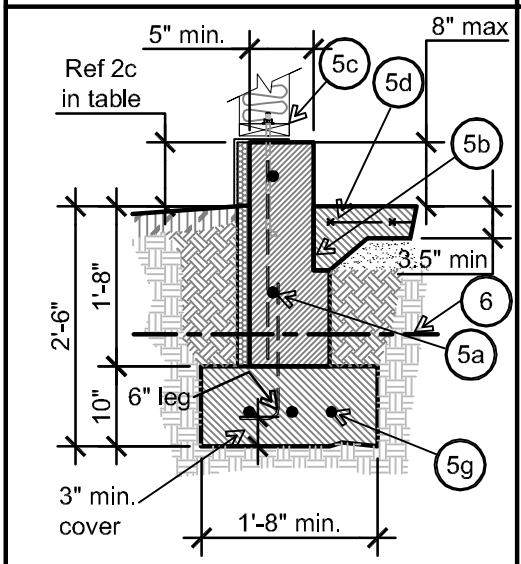

Type 3.1 / Frost Wall in PI<16 soil

Detail 2 / Type 3.1b

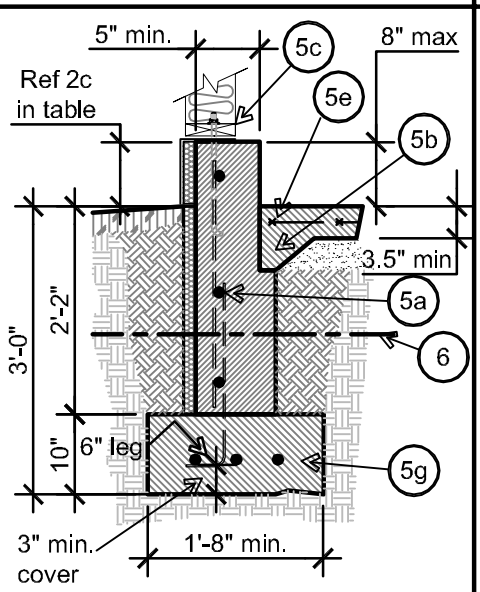

Type 3.1 / Frost Wall in PI 16 to 30 soil

Detail 3 / Type 3.1c

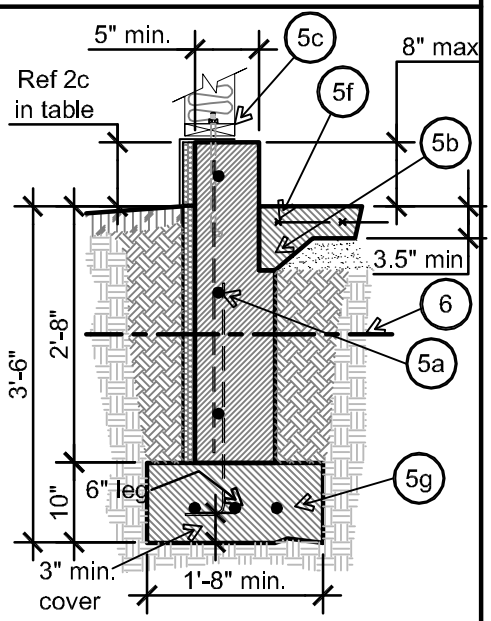

Type 3.1 / Frost Wall in PI 31 to 45 soil

Basement Walls & Foundations

Construction Standards (9'-0" max. from top of foundation)

FOUNDATION TYPE 4.0 DETAIL NOTES:

(1a) FOUNDATION FOOTING:

(1b) BASEMENT WALL: Do not backfill any wall before 7 days when average air temperature is above 50 degrees and not before 10 days when average air temerature is below 50 degrees. Reference general note B2.

(1c) BASEMENT SLAB:

(2) For all note "2" dimensional standards (a thru e), reference the following table:

Min. treated 2x6 PL w/ ½" dia. x10" min. anchor at 36" o.c. max. with washer & nuts. Anchor bolts to be placed at centerline of the sill plate. A maximum of one plate may be added on top of the lower plate. Refer to dtl. A1 & A2/6.0.

Vertical #4 Rebar Schedule		
Soil	8" wall	10" wall
PI<16	24" o.c.	30" o.c.
PI 16-35	18" o.c.	24" o.c.
PI 36-45	12" o.c.	18" o.c.

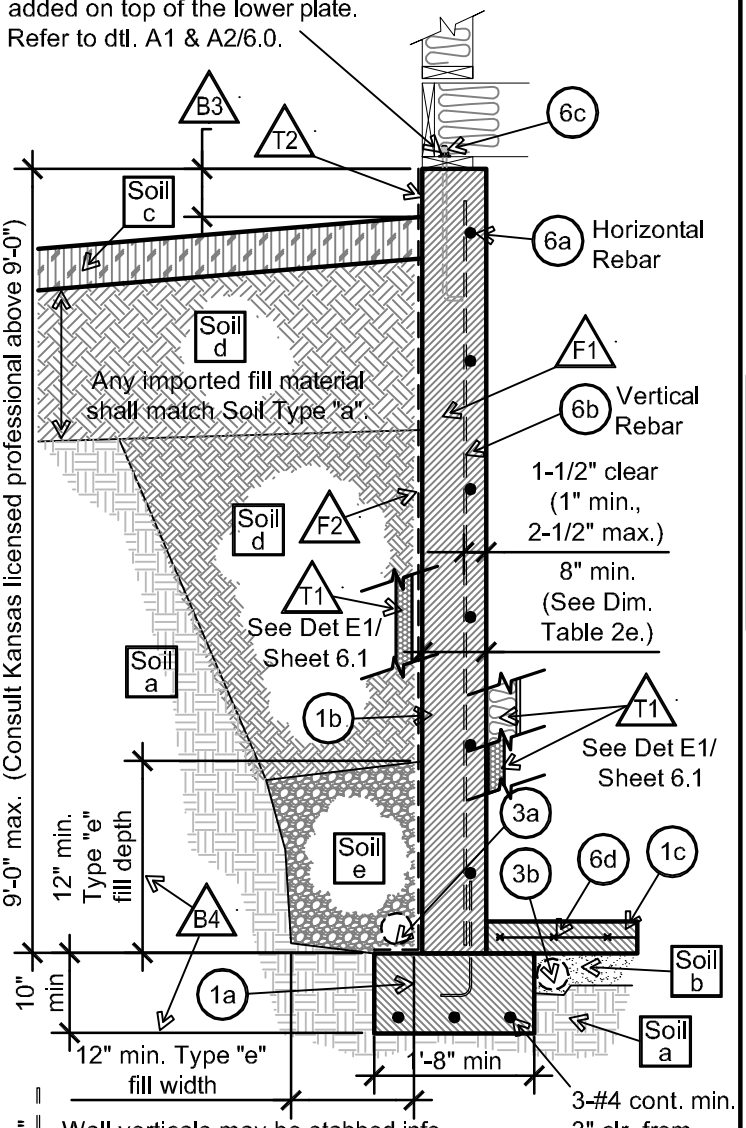

Wall verticals may be stabbed into footing at contractor's option in lieu of dowels. Verts shall not extend into subgrade below footing.

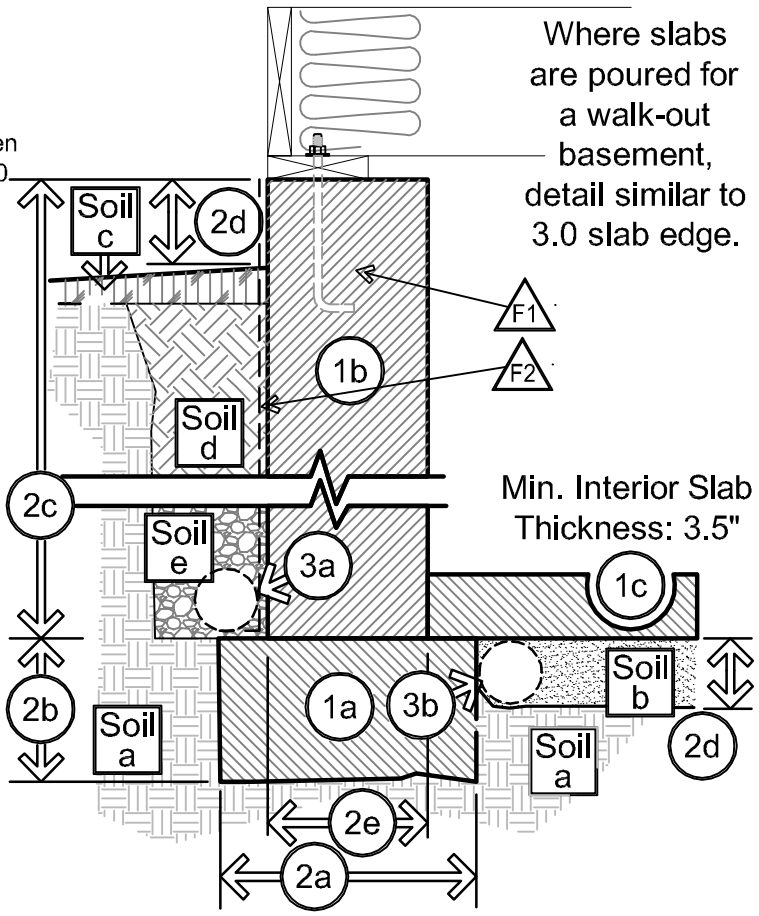

(3) 3a Exterior Drain Tile & 3b Interior Drain Tile. Reference Common Note D1/Sht 0.2

Dimension and Reinforcing Requirement Table						
Soil Type a	(2a)	(2b)	(2c)	(2d)	(2e)	Reinforcing
Sandy/Silts PI <16	20" min.	10" min.	9'-0" max. wall height from fndn.	4" min.	8" min. (10" min @ brick ledge)	Ref detail this sheet for reinforcing standards
Sandy Clay/Clay PI 16 to 30	20" min.	10" min.		4" min.		
Lean/Fat Clay PI 31 to 45	20" min.	10" min.		6" min.		

Consult a Kansas design professional where PI > 45.

(4) Reference Soil & Backfill standards for these material types: Soil a, Soil b, Soil c, Soil d, Soil e

(5) Reference specifically these Common Notes for type 4 fndn:
A1, A2, B1 thru B6, C1, C2, D1 thru D4
E1, F1, F2, R1 thru R5, T1, T2

(6) Steel Reinforcing and anchoring standards:
a) #4 horizontal @ 16" o.c. continuous - uppermost bar must be within 8" from top of wall. (Lap 18" min. at all splices & corner bars)
b) Reference vertical rebar schedule.
c) Anchor Bolts, see common note "R2" and detail this sheet.
d) Slab reinforcement: 6x6-w1.4 x w1.4 WWF (6x6 - 10x10 mesh), center in slab.

(7) Treat slab edges of walk-out basements according to criteria for Type 3.0a/ Stem Wall Det #1. Also reference detail F4/sht. 6.2.

Crawl Space Foundation Type
Construction Standards

FOUNDATION TYPE 5.0 DETAIL NOTES:

1a FOUNDATION FOOTING:

1b CRAWL SPACE STEM WALL: Do not backfill any wall before 7 days.

2 For all note "2" dimensional standards (a thru c), reference the following table:

Dimension and Reinforcing Requirement Table						
Soil Type a	(2a)	(2b)	(2c)	(2d)	(2e)	Reinforcing
Sandy/Silts PI <16	Dbl. wall dim. (See 2e)	10" min.	See Details 1 thru 3 below	6" min.	8" min. (10" min @ brick ledge)	Ref detail this sheet for reinforcing standards
Sandy Clay/Clay PI 16 to 30		10" min.		6" min.		
Lean/Fat Clay PI 31 to 45		10" min.		6" min.		

Consult a Kansas design professional where PI > 45.

3 Reference Soil & Backfill standards for these material types: Soil a, Soil c, Soil d

4 Reference specifically these Common Notes for type 5 fndn: A1 · A2 · B2 · B3 · C1 · C2 · D2 · D3 · R1 thru R5 · T1 · T2

5 Steel Reinforcing and anchoring standards:
a) 2- #4 horizontal continuous @ PI<16; 3-#4 horizontal continuous @ PI 16 and above.
b) #4 vertical @ 30" o.c. max., center in wall (Hook 24" into slab)
c) Anchor Bolts, see common note "R2" and detail this sheet.

6 All foundations must extend 12" min. into undisturbed soil free of vegetation or into engineered controlled fill materials. Foundations or grade beams may also be supported on concrete piers extending into deeper bearing material. These systems must be designed by an architect or engineer.

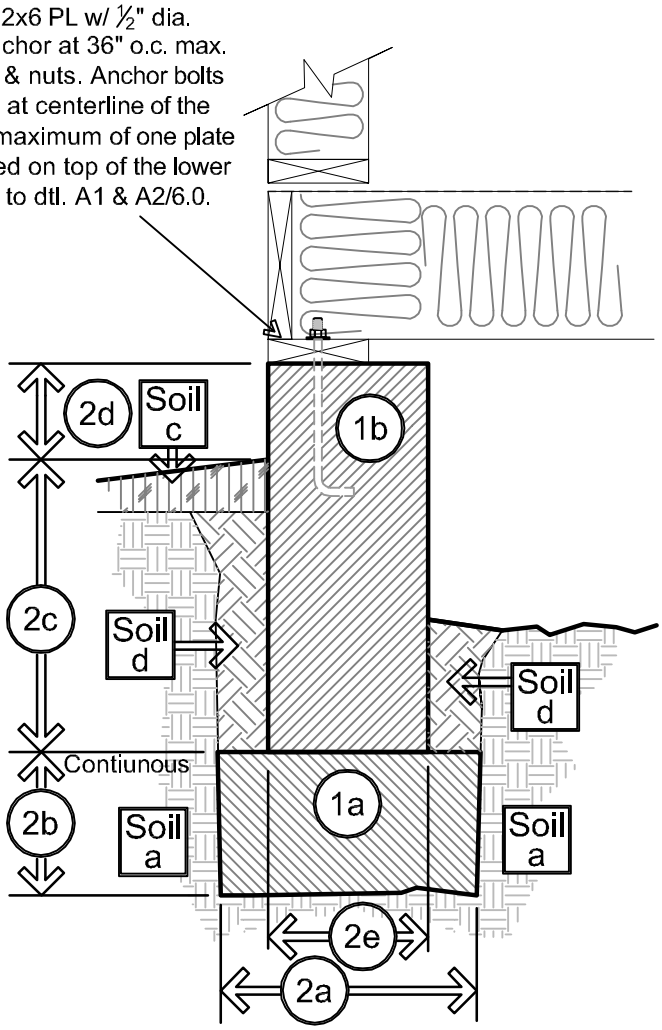

Detail 1 / Type 5.0a

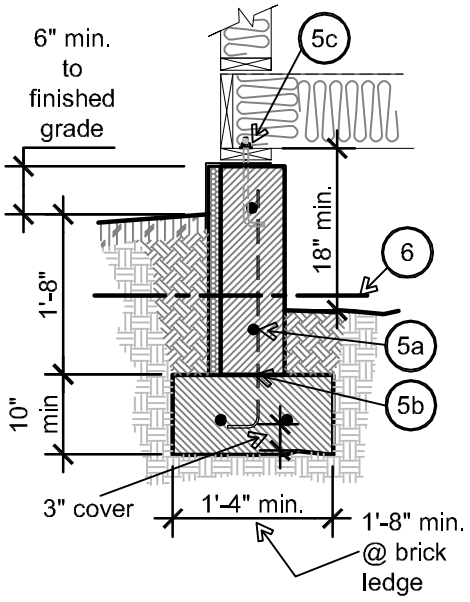

Type 5.0 / Crawl Space in PI<16 soil

Detail 2 / Type 5.0b

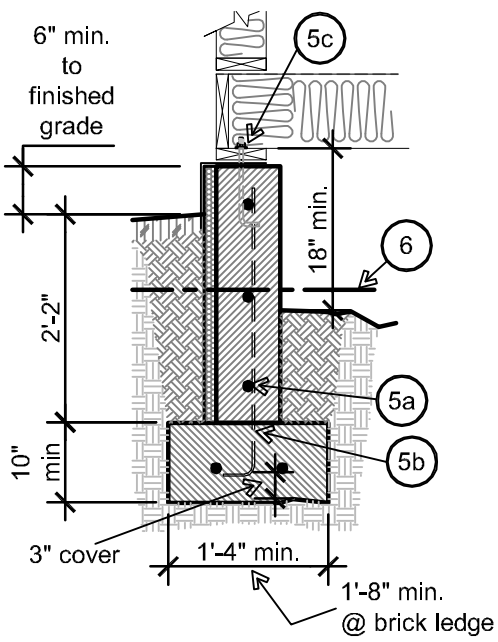

Type 5.0 / Crawl Space in PI 16 to 30 soil

Detail 3 / Type 5.0c

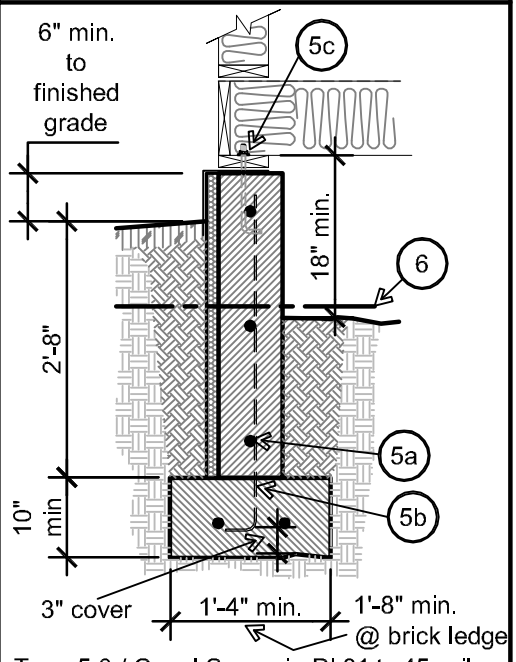

Type 5.0 / Crawl Space in PI 31 to 45 soil

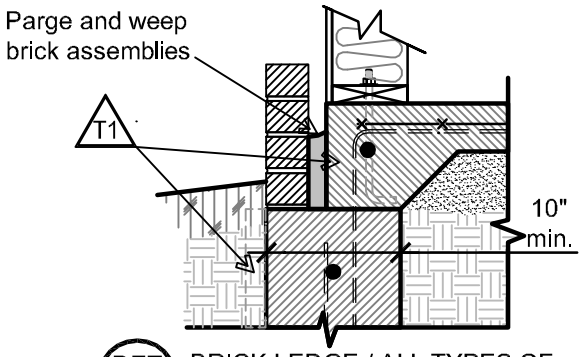

DET B1 BRICK LEDGE / ALL TYPES OF SLAB-ON-GRADE CONSTRUCTION.

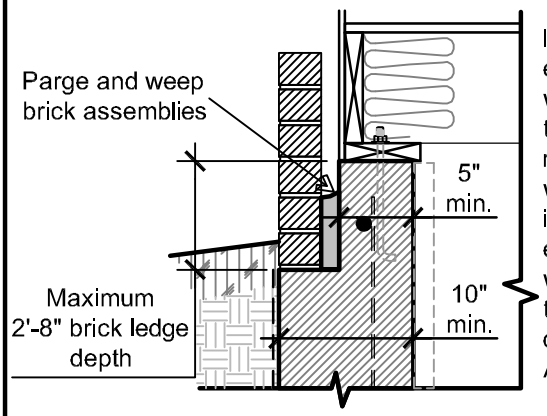

If brick ledge height exceeds 2'-8", walls must be 12" thick providing a 7" minimum interior wall. Center rebar in this 7" wall extension. Where walls retain less than 4' of soil, use detail sim. to type A4 / sht 6.0.

DET B2 BRICK LEDGE / BASEMENT & CRAWL SPACE FOUNDATION TYPES.

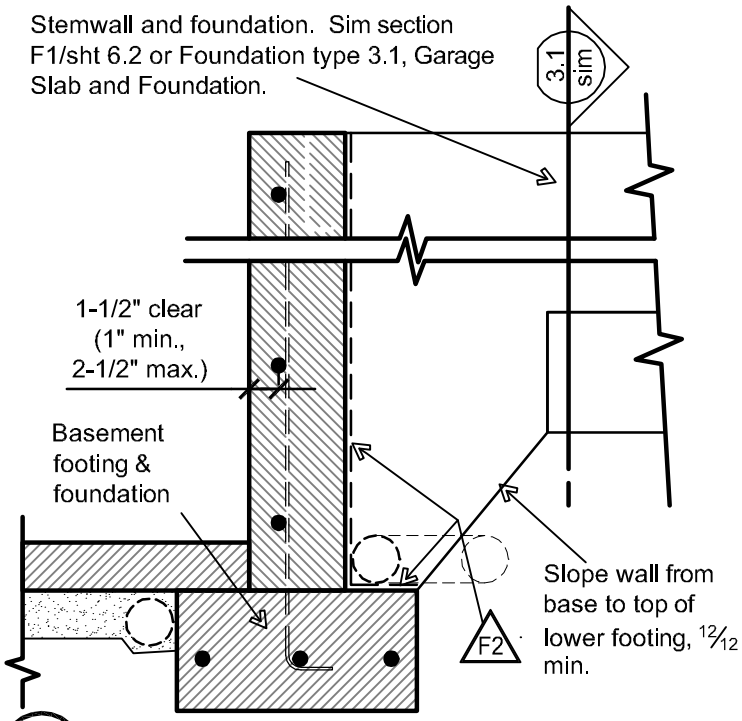

DET C1 STEPPED FOUNDATIONS FROM BASEMENT TO CRAWL OR GARAGE.

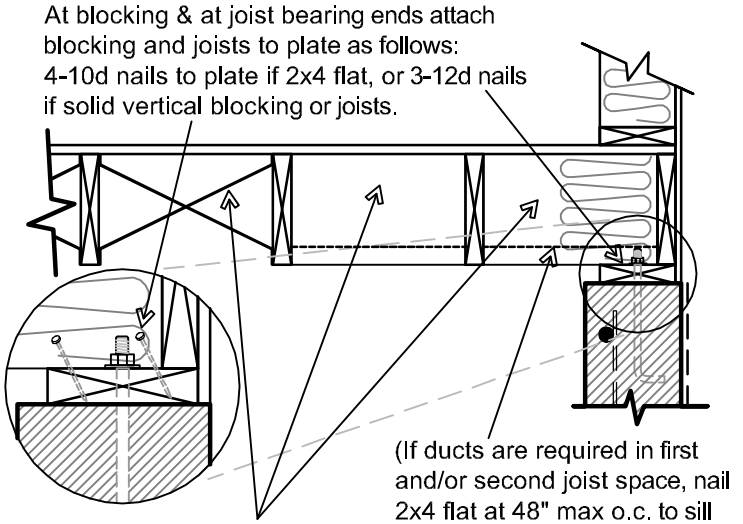

DET A1 TYPICAL BASEMENT WALL FRAMING PARALLEL TOP OF WALL.

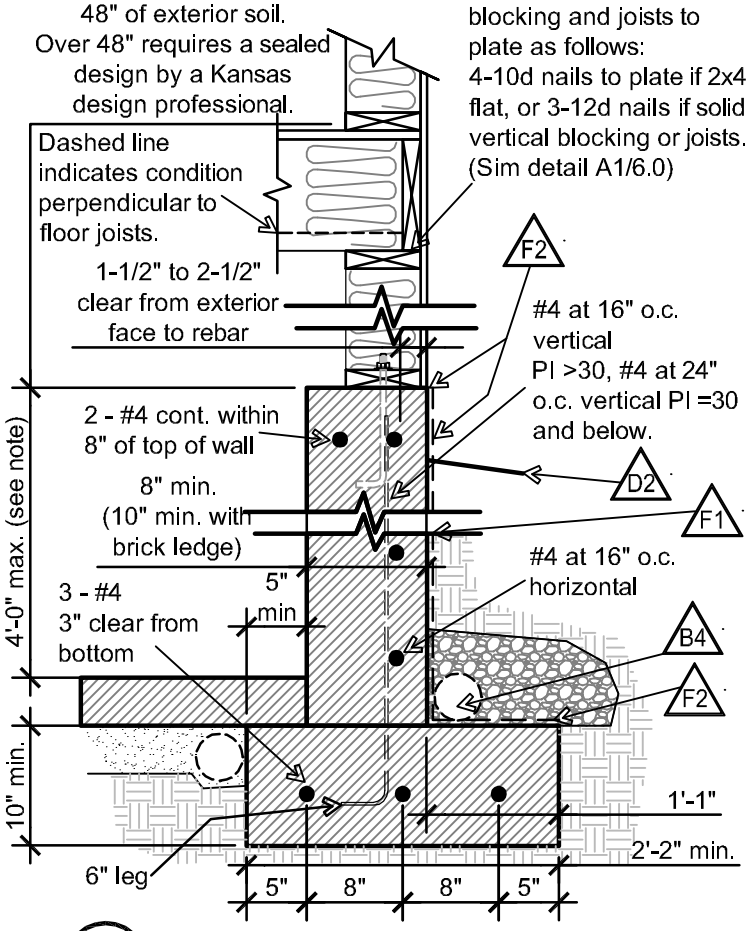

DET A2 UNSUPPORTED PARTIAL BASEMENT WALL CONSTRUCTION

Foundation Details
Construction Standards

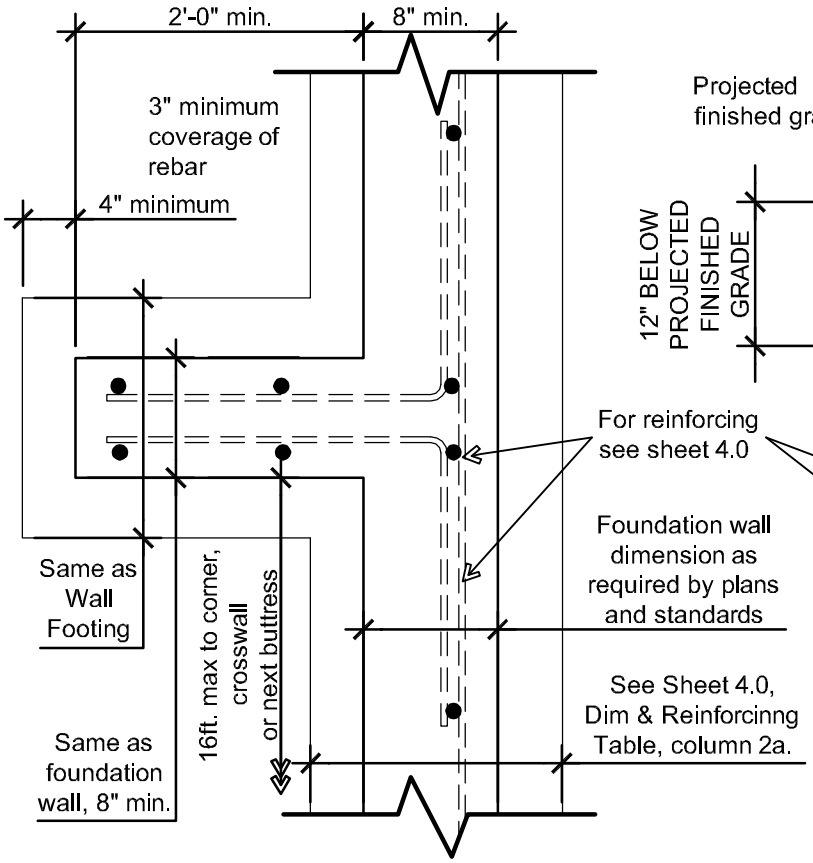

DET D2 FOUNDATION BUTTRESS HORIZONTAL SECTION (Plan view)

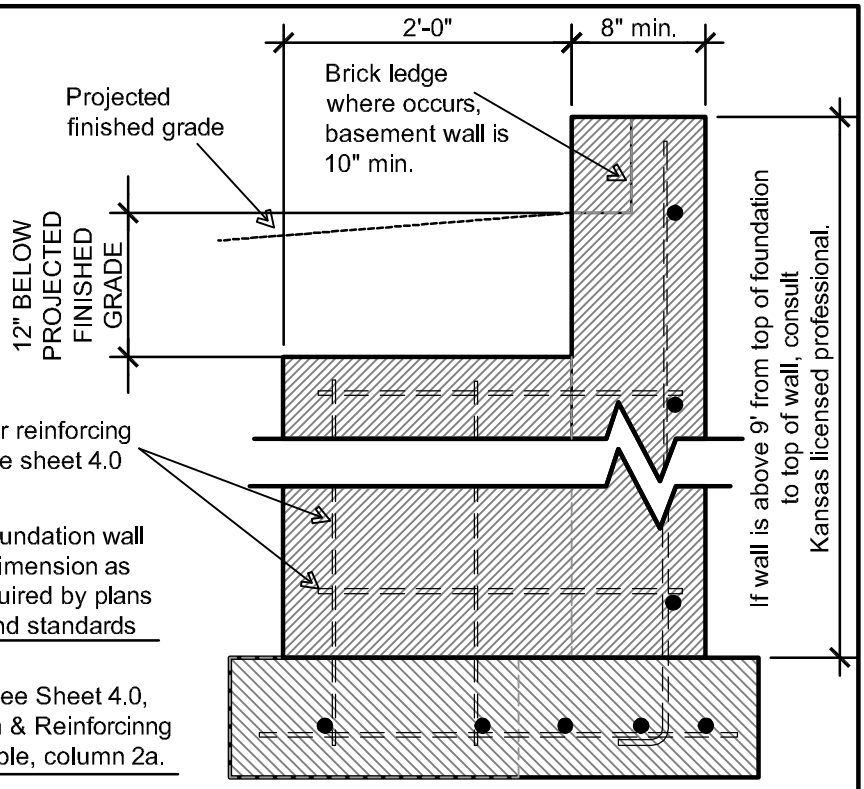

DET D1 FOUNDATION BUTTRESS VERTICAL SECTION

3 OPTIONS FOR MEETING BASEMENT WALL INSULATION REQUIREMENTS:

A. EXTERIOR INSULATION OPTION:
1) Install approved XPS or EPS insulation on exterior of foundation, full height, to R-10 min. Insure that exposed insulation at top of wall is protected against damage from abuse and exposure.

B. INTERIOR INSULATION OPTIONS:
1) Apply contiunous insulation, full height, with EPS or XPS sheet material to R-10 min.
2) Construct interior stud walls, full height and insulate walls to R-13 min.

Reference table "A", Sheet 0.2, Foundation Insulation Standards, for details on insulation of basement and slab-on-grade projects.

DET E1 BASEMENT INSULATION OPTION WALL INSULATION REQUIREMENTS

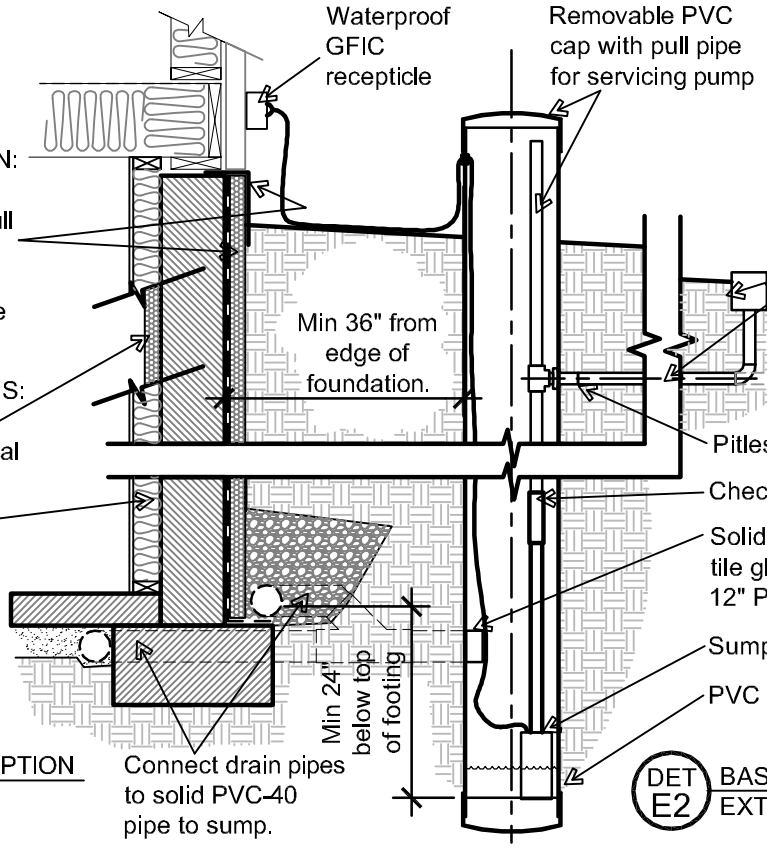

SECONDARY USE ONLY. THIS SYSTEM DOES NOT REPLACE INTERIOR SUMP REQUIREMENT.

DET E2 BASEMENT OPTION EXTERIOR SUMP PUMP

Alternative Foundation Details

Construction Standards

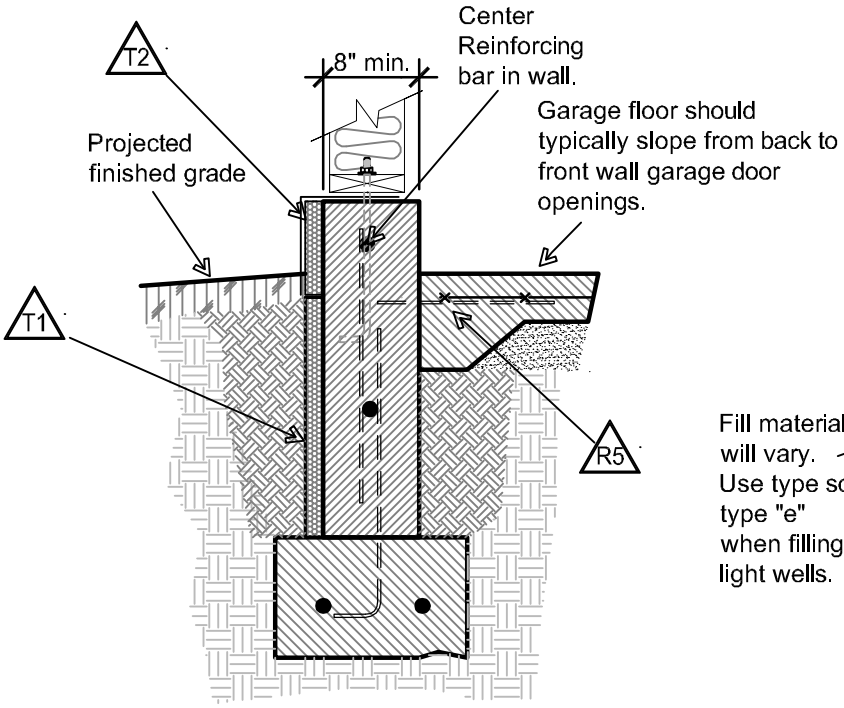

DET F1 GARAGE SLAB & FOUNDATION ALTERNATIVE DETAIL

Reference foundation 3.1, garage slab and foundation detail for reinforcing and dimensioning requirements

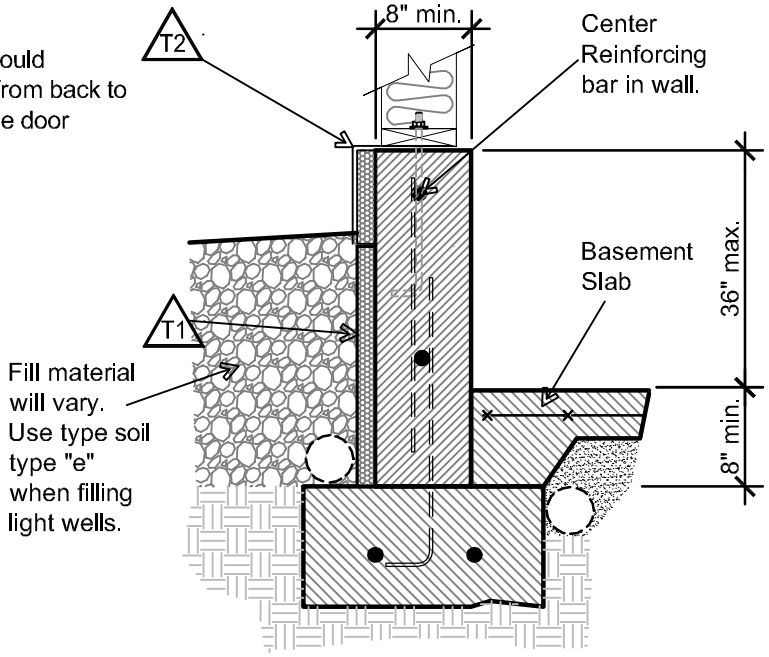

DET F2 PIT or VIEW-OUT BASEMENT WALL SUPPLEMENTAL DETAIL

Similar to basement wall 4.0 detail for reinforcing and dimensioning requirements.

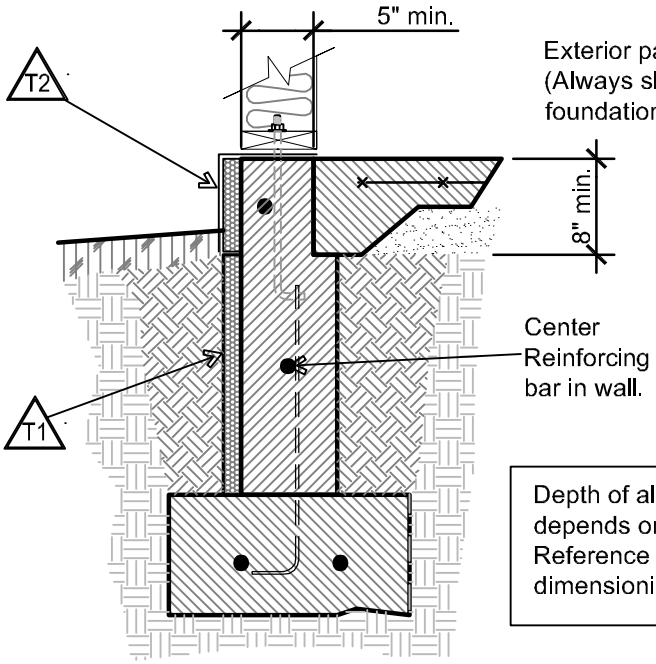

DET F3 FULL ELEVATION FROST-WALL FLOATING INTERIOR SLAB ALTERNATIVE BASEMENT WALK-OUT DETAIL

Similar to foundation 3.0 stemwall and foundation detail for reinforcing and dimensioning requirements

Depth of all foundations depends on soil PI analysis. Reference similar details for dimensioning requirements.

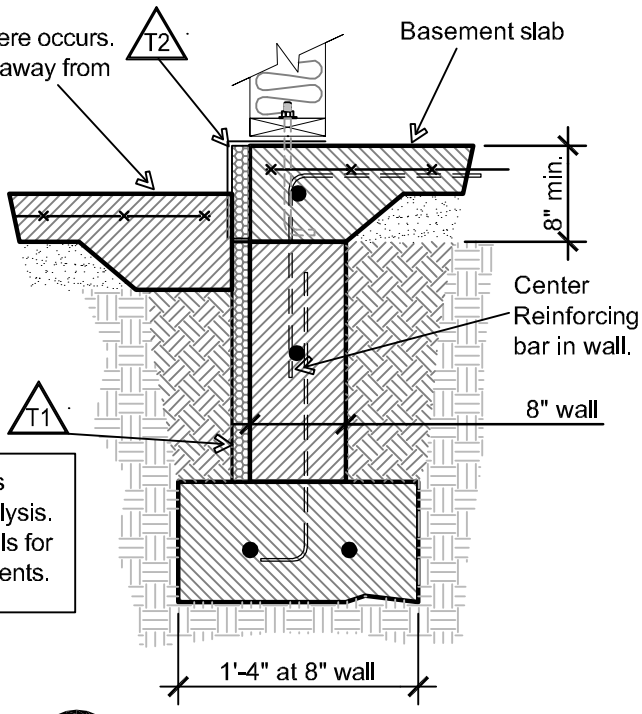

DET F4 WALK-OUT BASEMENT @ EXTERIOR PATIO TRADITIONAL SLAB EDGE

Similar to foundation 3.0 stemwall and foundation detail for reinforcing and dimensioning requirements

Foundation & Slab Site Conditions

Construction Standards

Maintaining positive surface drainage away from the foundation edge by adding non-granular (cohesive) soil over settling backfill material will help move water away from the buildings perimeter.

When perimeter soil drainage is not maintained, increased water penetration at foundation promotes soil expansion, greatly increasing damage potential. D3

Slabs will heave and foundation edges will separate as a result of soil expansion pressure causing not only physical but structural damage.

When soils below the slab move, below slab water and waste pipes can rupture, further accentuating damaging conditions.

CAUTION!: Pouring slabs on top of soils with LOW (DRY) MOISTURE CONTENT will promote conditions favorable to "HEAVING". As moisture is drawn INTO soil below the slab, it EXPANDS, increasing pressure promotes slab failure.
Higher PI soils accentuate this tendency.

Soil b
Soil a
Soil a
FLOW

Increasing moisture content causes expansion of clayey soil materials.

SITE S1 INCREASING BELOW GRADE MOISTURE
"DOMING" TENDENCY WITH INCREASE PRESSURE

Soil Type "b" provides a buffer for normal seasonal variations in soil moisture content. Extremes in weather, flaws in drainage planning and maintenance, abnormal or existing ground water conditions will accentuate clayey soil movement resulting in damage to slabs and foundation. Where extreme soil or moisture conditions exist or are anticipated it is recommended that a soils engineer be consulted and aggressive subsurface material conditioning be implemented.

Deeper foundations in higher PI soils (Soil "a") provide greater protection against thermal and moisture damage, some of these benefits include:

1. Moisture retaining soils (High PI) allow frost (freezing) to penetrate deeper below grade, deeper foundations are required to stay below frost depth; and
2. Moisture variations create swelling and shrinking of clay type soils. The deeper the foundation, the less impact surface water has on soils below the slab.

Thermal and Moisture impact is greatest at surface and decreases with depth.

Increasing the type and amount of reinforcing steel in slabs with higher PI ratings helps to strengthen slabs against failure when soil below experiences differential movement.

Soil b
Soil a
Ulility Lines
Soil a

Reinforcing material is not effective if not located properly in slab.

IMPORTANT NOTE: Foundations depend on even soil bearing in undisturbed soil, consistent in type and free from vegetation, to distribute loading properly. Foundations must be stepped to follow existing site grading conditions, supported on piers or rest in properly tested and compacted fill material. Failure to follow this accepted practice will promote differential settlement over time and is likely to result in foundation, subsequent structural framing and finish material damages.

SITE S2 EXISTING SITE PREPARATION
TENDENCIES OF SOIL MATERIALS WITH CHANGING ENVIRONMENTAL CONDITIONS

Dryer soils on exterior wick moisture from below slab, shrinking interior material and bearing capacity.

Soil b
Soil a
Soil a
FLOW

Drying causes shrinkage of clayey soil materials.

CAUTION!: Pouring new slabs on top of soils with HIGH (WET) MOISTURE CONTENT will create conditions favorable to "CUPPING". As moisture is wicked out from below the slab, soils SHRINK. decreasing bearing capacity.
Higher PI soils accentuate this tendency.

SITE S3 DECREASING BELOW GRADE MOISTURE
"CUPPING" TENDENCY WITH DECREASED PRESSURE

City of Wichita
City Council Meeting
September 13, 2011

TO: Mayor and City Council

SUBJECT: Regional Air Quality Improvement Project (All Districts)

INITIATED BY: Metropolitan Area Planning Department
Public Works and Utilities Department

AGENDA: New Business

Recommendation: As project sponsor, approve the grant application, the agreement and accept the award.

Background: The Metropolitan Area Planning Department (MAPD) requests approval of a grant application for a Regional Air Quality Improvement Program. The project consists of developing and implementing three related components, all part of the larger project over the course of three years beginning in September, 2011. The three components are for the development and implementation of 1) a "high ozone day" alert system; 2) an outreach program for voluntary air quality improvements for businesses and organizations; and 3) a public education and community awareness program.

For a number of years, the Wichita region has been very close to exceeding the National Ambient Air Quality Standards (NAAQS) for ozone, a chemical compound and major component of smog. EPA revised the ozone standard in March, 2008. In response, the City Council passed a resolution asking City staff and the community to take action to find solutions to reduce air pollution to stay in compliance with the federal standard.

In the last two years and the spring and summer of 2011, Wichita has experienced several days and hours of high and extremely high levels of ozone. At this time, the Wichita area remains in compliance with the current ozone standard, but barely so.

While a recent EPA proposal to revise the ozone standard further has been postponed until 2013, the Wichita region remains perilously close to being designated as a non-attainment area at the current standard. Since non-attainment status would have substantial economic impacts on the region (increased costs of $10 million or more per year for at least ten years), it is in the community's best interest to improve its air quality. The proposed Regional Air Quality Improvement Program is designed to promote voluntary efforts at reducing air pollution. It formally promotes proactive measures to raise public awareness and to provide information about health and economic implications prior to violation of the standard.

On July 1, 2011, the Wichita Area Metropolitan Planning Organization (WAMPO) announced that 2011 Surface Transportation Program (STP) reserve funds were available for eligible projects in the WAMPO region. The application deadline was July 15, 2011. The stipulation was that funds must be obligated in the current 2011 Federal Fiscal Year (by September 15th). City staff submitted an application on July 15, 2011, for a project called Wichita Regional Air Quality Improvement Program. Due to the short application period, City staff utilized the authority of City of Wichita Administrative Regulation No. 2.4. This allows that a grant application may be submitted for consideration prior to Council approval where delay would invalidate the grant application.

Project approval was recommended by the WAMPO staff and the WAMPO Technical Advisory Committee, and was subsequently approved by the WAMPO Policy Body, all required prior to being approved by KDOT as an authorized project.

Analysis: WAMPO has been designated by the state of Kansas as the Metropolitan Planning Organization (MPO) for the Wichita metropolitan region. The WAMPO Transportation Policy Body has approved this project which is to be funded by federal Surface Transportation Program (STP) funds. The City must sponsor and implement the project per a contract agreement with KDOT. The City must obligate the funds within the 2011 Federal Fiscal Year and immediately begin work but may complete the project in subsequent years. MAPD intends to utilize department staff to complete the project.

Financial Considerations: The cost of the project is $149,998 and KDOT requires a 20% match. Wichita will provide $30,000 and KDOT will provide $119, 998. City match shall consist of budgeted 2011 general funds that will be placed into a project account for project implementation over the life of the project. The City will expend project funds and KDOT will reimburse the City per the contract agreement. The general funds are being reallocated to this project from the Public Works and Utilities Department to the MAPD as provided in a previous agreement for staff labor and expenses that was authorized by the City Council on February 15, 2011.

Goal Impact: This project will help achieve the goals of Safe and Secure Neighborhoods, Quality of Life, and Promote Economic Vitality.

Legal Considerations: The contract agreement has been approved by the Law Department as to form.

Recommendations/Actions: It is recommended that the City Council, as project sponsor, approve the Grant Application and the Agreement and authorize necessary signatures to allow receipt of the award.

Attachments:
1) Resolution 08-306, A Resolution Encouraging a Community Response for Clean Air; dated 6/17/2008
2) Project Grant Application submitted to WAMPO, revised 7/29/2011
3) Attachment 1 – Project Scope Revised, dated 7/29/2011
4) Contract Agreement between the Kansas Department of Transportation and the City of Wichita
5) Council Consent Agenda Report, dated 2/15/2011

WAMPO Proposal for 2011 Unobligated Funding

PROJECT TITLE: Wichita Regional Voluntary Air Quality Improvement Program

Project Start Date: Immediately upon contract approval; potentially September 15, 2011
Project Duration: Two years

Applicant: City of Wichita Project Sponsor: Kay Johnson

Total Project:	**STP Fund**	**COW Match**	**Total Project Cost**
	$119,998	$30,000	$149,998

General Project Description:
This proposal is for the development and implementation of a Wichita Regional Voluntary Air Quality Improvement Program to address ambient air quality due to ozone formation and its chemical precursors in the Wichita region. For several years the Wichita region that includes Sedgwick, Harvey, Butler and Sumner Counties has been in jeopardy of violating the current National Ambient Air Quality Standard for ozone. It has been announced this year that EPA will raise the standard by lowering the limit either sometime this fall or in its next standard review cycle within two years. (A proposed schedule is provided in Attachment 1, for a 2011 revision.).

The comprehensive program proposed in this application consists of three interrelated elements. Each is enhanced by the others. Elements would generally be worked concurrently. This program consist of developing and implementing:

1) A "High Ozone Day" Public Alert System;
2) A Voluntary Air Emission Reduction Program; and
3) An Air Pollution Public Education and Community Awareness Program.

The primary benefit of these activities is voluntary ozone emissions reduction. This will be accomplished by engaging the public, businesses, and organizations to take voluntary actions to reduce ozone and its precursors from mobile sources. This program will also provide targeted communication, education and outreach to influence travel and other actions through personal, community and organizational behavioral changes, and thus provide air quality improvement.

Project	Hours	Wages & Benefits (W&B)	Expenses	Total Cost
	1878	$133,840	$16,155	$149,995

Expense categories are provided in Attachment 2.

Summary of Each Program Element:
This program would begin immediately upon contract approval, potentially September 15, 2011. The elements would be worked in various stages through a two year period. Because the of the interest and demand, the hours identified within Element 2 and 3 may be somewhat interchanged with up to 15% of the hours going to one or the other project. Both projects, however, will be fully developed and implemented.

1) **Develop and implement a regional "High Ozone Day" Public Alert System**
   This element consists of development and implementation of a system for predicting and communicating unhealthy air pollution periods due to high ozone levels to the public,

community and media for the purposes of modifying behaviors and protecting health. Details are provided in Attachment 3.

Element 1	Hours	Total W&B
FFY 2012	170	$11,782
FFY 2013	**270**	$19,454
#1 TOTAL	440	$31,236

2) **Develop and implement a Regional Voluntary Air Quality Improvement Program to voluntarily reduce air emissions:**
Develop and implement a comprehensive outreach program for voluntary air emission reductions by working with businesses and stakeholder groups. Details are provided in Attachment 3.

Element 2	Hours	Total W&B
FFY 2012	180	$12,535
FFY 2013	**280**	$20,179
#2 TOTAL	460	$32,714

3) **Develop and implement a Regional Air Quality Public Education and Community Awareness Program**
Develop and implement a Community Awareness/Education Plan that details actions for encouraging citizens and organizations to reduce ozone emissions through public outreach and education. Details are provided in Attachment 3.

Element 3	Hours	Total W&B
FFY 2012	294	$20,475
FFY 2013	**684**	$49,415
#3 TOTAL	978	$69,890

ATTACHMENT 1 – 2011 Ozone Standards Timeline

The attachment commitments and dates listed below are based on EPA announcements and may be modified by EPA at any time.

EPA's Proposed Timeline for 2011 Ozone Standards *NEW*	
Milestone	**Date**
Final rule signed by EPA	Fall, 2011
Governor makes recommendations to EPA	2011/2012
EPA makes final designations	Summer 2012
Final designations become effective	Summer 2013
Highway Conformity Required	Summer 2014
Attainment SIPs due to EPA	July 2014
Attainment Demonstration/Attainment	2016/2019

ATTACHMENT 2 – EXPENSE Categories

If this project is approved, an itemized detail list of the expenses will be provided for the contract. Total expense estimated for this total project are $16,155.

2200	PBX - Line Charges
2201	PBX - Instrument Charges
2203	Long Distance Service
2216	Voice Mail
220	Communications
	Mileage
230	Transportation and Training
2600	Data Center Charges
260	Data Processing
2701	Motor Pool-Unscheduled Charges
270	Equipment Charges
2917	Printing and Copying
290	Other Contractuals

ATTACHMENT 3 – Details of Program Elements

Program Element:

1) <u>A "High Ozone Day" Public Alert System;</u>

Develop, implement and coordinate a "high ozone day" prediction and alert system to communicate unhealthy air pollution periods due to high ozone levels to the public and media.

- Establish system to report exceedances and potential NAAQS air quality violations to affected regional jurisdictions.
- Act as regional spokesperson for media, public and government inquiries regarding "high ozone day" alert, ozone data and/or compliance status with EPA air regulations.
- Coordinate monitoring results with KDHE to determine cause of any high values relative to any follow-on actions and public announcements.
- Meet and work with KDHE, EPA, Oklahoma Department of Environmental Quality, Mid America Regional Council and KDHE consultants to initially develop a low tech system that requires little to no additional funding; or one that is paid for and operated by KDHE.
- Work with CoW IT staff to establish system and a link on a City website to post alerts
- investigate more robust systems; develop cost estimates for improving accuracy and automatic outreach mechanisms of alert system.
- Develop transit options/messages for "High Ozone Alert" days and work with KDOT and County Emergency Managers as needed.
- Develop and implement messages using Intelligent System Message Boards when traffic warrants notification.
- Track, report monthly and quarterly progress, and annually evaluate system for improvements.

2) <u>A Voluntary Air Emission Reduction Program</u>

Develop and implement a voluntary community based air quality emissions reduction program to obtain reductions in air quality emissions that cause ozone pollution in the Wichita region.

- Monitor regulatory changes of NAAQS for Wichita MSA impact for changes to Emissions Reduction Program.
- Identify those organizations that have large transportation source contributions to target for potential emission reductions.
- Develop and deliver Air Quality Improvement Toolkits individualized for five community sectors.
  - Each toolkit will be an electronic roadmap including instructions with individualized sector information including regional and state air quality information; a general air quality audit form for fleet and fueling operations, two example sector policies (fleet efficiency and idle reduction) with two or more sector-specific policy examples, an employee training guide to implement recommended policies, and example records management program to reduce and track fuel and hazardous materials consumption.
  - The five community sectors shall be designed for entities within the MSA/CSBA and are:
    a) Local governments within the MSA/CSBA;
    b) Small businesses that are considered non-point source polluters (not intended for large industries with KDHE Air Quality Permits (large point source polluters);
    c) Businesses with a 20 vehicle fleet or greater;
    d) Local school districts, colleges, universities and institutions; and
    e) Nonprofits and faith based organizations.

- Each individual organization that applies for a sector toolkit would agree to certain conditions including:
  a) Agree to identify vehicles owned and operated by entity,
  b) Agree to public recognition as a Wichita Area Air Quality Improvement Program Participant; and
  c) Agree to track and publically report fuel consumption if owns and operates 10 or more vehicles.

- Identify and offer to provide a general air quality presentation with sector toolkit information to each Chamber of Commerce in the region. Work with individuals and organizations that are willing to discuss steps to make ozone reductions.
- Identify and offer to provide a general air quality presentation with sector toolkit information to each local government within the region. Work with individuals and organizations that are willing to discuss steps to make ozone reductions.
- Identify and offer to provide a general air quality presentation with sector toolkit information to Wichita Independent Neighborhood Organizations as well as similar neighborhood and community organizations within the region. Work with individuals and organizations that are willing to discuss steps to make ozone reductions.
- Work with GreenBiz Wichita and similar organizations to provide presentations and deliver tool kits to its members that fall within one of the five identified sectors to implement voluntary ozone reduction initiatives at member businesses;
- Work with the regions school districts to provide presentations and deliver tool kits to its management and offer to work with a coordinator at a school district if needed.
- Provide an Air Quality presentation and offer toolkits to the Wichita Chamber's Visioneering Wichita - Environmental Sustainability Coalition with its purpose to establish sustainability priorities for the community including transportation, the built environment, energy efficiency as well as an air quality improvement component that is viewed as one of the most critical environmental issues impacting area health and the economy.
- Establish a voluntary Air Quality Speaker's Bureau to make general Air Quality Presentations and deploy/sign up organizations for toolkits.
  - Identify and train experienced environmental professionals and identified college students to provide the Air Quality presentation and deploy the toolkits.
  - Schedule speaker's bureau members to make presentations and deploy the electronic toolkits.
  - Advertise the Speakers Bureau using social and electronic media.
- Will seek to participate in similar programs in other affected jurisdictions and identify at least 5 individuals within other communities to provide presentations.
- Identify local bicycle vendors within the region to establish and conduct regular bicycle safety training classes including one at each annual energy conference that falls within this workscope.
- Seek out other regional organizations and stakeholders to identify and implement additional emissions reduction strategies.
- Develop and implement local regulatory response programs for mandated state or federally required SIP program element for the Wichita MSA that may occur within the program timeline.
- Work with local jurisdictions to develop fleet management programs to consider vehicle efficiency and alternative fuels programs for fleets to reduce emissions and fuel consumption.

- Track, report monthly and quarterly progress, and annually evaluate system for improvements.

3) <u>An Air Pollution Public Education and Community Awareness Program.</u>

Develop and implement a Public Education and Community Awareness Program to be utilized throughout the four-county area to the general public to obtain voluntary reductions in air quality emissions that cause ozone pollution in the Wichita region.

- Develop a community awareness/education plan that details actions for encouraging citizens and organizations to reduce ozone emissions through public outreach and education.
  1. This plan will include identification of target audiences; targeted message development and priorities; and identification of methods for delivering messages through public service announcements and commercial advertising using a variety of media outlets that will include all or some of the following; TV, radio, print, billboards, and social media,
  2. The Plan will include messages, outreach materials and potentially proposed educational curriculum for at least four stakeholder segments:
     a) Primary and secondary school-aged students with curriculum and outreach materials targeted for certain high priority age groups within area schools.
     b) Employees and students of local colleges and universities.
     c) Employees of nonprofits and faith based organizations through direct delivery and/or through Nonprofit Chamber of Commerce
     d) Employees of companies, businesses, and government agencies.
  3. Develop and implement a written plan – February,2012; Update the plan by February 2013;
  4. Conduct two annual Public Awareness Surveys Pre and Post Media purchase – Beginning March 6, 2012, and in March 2013 for Pre-media implementation; Post Media Implementation Beginning: October 2012 and October 2013.
  5. Annual development of Public Service Announcements/spots – Radio, TV, Newspaper, Social Media;
  6. Conduct activities for annually procuring media buyer services;
     - Proposal development and submittal for Qualified Professional Services solicitation
     - Obtain and evaluate proposals using approved policies and procedures to evaluate and select technically qualified service provider, develop contract, and obtain appropriate approvals; and
     - Coordinate and initiate media services project; evaluate and recommend invoice for payment and close out contract.
  7. The Plan will include the development and implementation of transportation related content for the Wichita Regional Energy and Sustainability Conference; a major 2-day event for businesses, local governments; educational institutions and non-profits and faith –based organizations to improve air quality, economic development, and community health.
     - Obtain speakers to provide a variety of presentations on air quality emission reductions due to mobile sources and topics for the conference include but are not limited to:
       a) Fuel efficient vehicles and alternative fuel choices
       b) Alternative community development patterns, saving, renovating; and remodeling buildings;

c) Increasing choices in transportation modes – promoting walking and bicycling,
d) Improving energy efficiency of buildings and streets (street light synchronization);
e) National and regional trends and best management practices on improving building and street codes, improving building and construction materials, conserving resources including water, air, open spaces, etc.
f) Use of alternative forms of energy including but not limited to solar, wind, geothermal, batteries; hydrogen, etc.

- Some marketing efforts including participation in state-wide, region and local events will be conducted to include transportation related industries and business for sponsorship and vendor booths. .

8. General information on ozone formation, generation sources of ozone pre-cursors and general tips for reduction.
   - What Nonattainment is and how it impacts the community
   - Rideshare initiatives coordinated by regional transit authorities;
   - Transit, bike and walking path information materials;
   - Public outreach on complete streets policy and implementation.
   - Development of additional congestion mitigation measures for public.
   - Development of Transit options/messages for high ozone day
   - Development and implementation of promotion of alternatively fuel fleets and promotions – CNG, Electric Plug In, Ethanol, etc. including work with Auto Dealers

- Develop air quality and transportation sections on www.greenwichita to promote environmental education and idle reduction tips, programs; activities for individuals and organizations including toolkit information, applications, for various sectors including organizations participating in program.
- Develop and utilize regular social media messages and events for program promotion...
- Monitor regulatory changes of NAAQS for Wichita MSA impact for changes to Public Education and Community Awareness Program.
- Track, report monthly and quarterly progress, and annually evaluate system for improvements.

Agenda Item No. _____

City of Wichita
City Council Meeting
February 15, 2011

TO: Mayor and City Council

SUBJECT: Environmental Initiatives Manager

INITIATED BY: Metropolitan Area Planning Department (MAPD) / Public Works & Utilities

AGENDA: Consent

Recommendation: Approve position transfer, quarterly reimbursements, and any necessary budget adjustments.

Background: In 2010, Environmental Services became a division of Public Works & Utilities. This reorganizational process eliminated the need for a Director of Environmental Services. However, the City has a remaining need for expertise in environmental issues. Therefore, the Director of Environmental Services position was reclassified and became the Environmental Initiatives Manager. This position is involved with short- and long-term planning processes regarding Clean Air Act compliance, sustainability concerns, and other environmental issues. In 2011, staff is recommending this position be transferred from Public Works & Utilities to the MAPD as a result of its planning responsibilities.

Analysis: The City must continue to address complex environmental issues. The Environmental Initiatives Manager researches and recommends policy to mitigate the City's environmental risk. This position also serves as a community liaison for environmental issues. The local and regional planning responsibilities of the Environmental Initiatives Manager make it a natural fit for the MAPD.

Financial Considerations: In 2011, total cost for the Environmental Initiatives Manager position is $152,371. The 2011 Adopted Budget authorizes $63,473 in General Fund support to cover salary costs. Grant support up to $75,898 is available through the EECBG Comprehensive Community Energy Program. Public Works & Utilities has agreed to provide up to $13,000 in additional General Fund support to cover the difference between total costs and budget and grant support.

Staff proposes that quarterly transfers be made from Public Works Administration (General Fund) to the City/County Planning Fund at the end of each quarter based upon actual position costs. The MAPD will be responsible for fully utilizing available grant support. Financing of the Environmental Initiatives Manager position will be reevaluated during creation of the 2012/2013 Annual Budget and a shared funding agreement is expected to be developed to cover ongoing position costs.

Goal Impact: Transferring funds to support the Environmental Initiatives Manager addresses the Safe and Secure Community goal by improving the community's environmental health through planning.

Legal Consideration: Budget adjustments above $25,000 require City Council approval.

Recommendations/Action: Approve position transfer, quarterly reimbursements, and any necessary budget adjustments.

Attachments: None.

2011 Transportation Improvement Program (TIP) Reserved Project

Previous Project | Next Project | Add New Project | View Record

1. Does the project sponsor want to submit this project for consideration as a 2011 TIP Reserved Project? ◉ Yes ○ No

2. Is this project able to obligate on short notice? ◉ Yes

The information below is the information that is currently in the 2011 TIP

Contact Information

Project sponsor:	City of Wichita
Contact name:	Kay Johnson
Contact title:	Manager of Environmental Initiatives
Contact address	455 North Main Street Wichita, KS 67202
Contact phone:	(316) 268-4251
Contact fax:	
Contact e-mail:	kjohnson@wichita.gov

Project Information

Is the project Competitive or Non-Competitive? C

Type "C" for Competitive or "N" for Non-Competitive.

Project name: Wichita Regional Air Quality Imrovement Program: Region: From FFY 201

If the project is not listed in the 2011 TIP, provide a project name using the following naming convention: "Project Type": "Project Location": "From" to "To".

Project names are subject to change in order to keep project names consistent throughout the TIP.

s Application Form

l of Reserved Projects

○ No

. Change only the information that needs updating.

Project Funding Information

For the following fields, provide project funding/cost amounts by category. The project's funding/cost amounts must be in 2011 dollars. DO NOT apply inflation rates for future years (2012, 2013, or 2014). Enter a dollar amount in the following format with no dollar symbol: 000,000,000.

What is the total cost of the project? $150,000

Enter only one funding source per funding section of this TIP amendment application form. If funding source is a MPO Competitive fund, enter one of the following: MPO-STP, MPO-CMAQ, or MPO-BR. If funding source is Non-Competitive, spell out the funding source. Abbreviations such as: HSIP, IM,TE, etc. are acceptable.

Funding Source 1

What is the project's primary federal funding source? MPO-STP

	Federal	State	Local	Total
Other	$120,000	$0	$30,000	$150,000
PE	$0	$0	$0	$0
ROW	$0	$0	$0	$0
CE	$0	$0	$0	$0
Const	$0	$0	$0	$0
Total	$120,000	$0	$30,000	$150,000

WAMPO TIP number:

Project type:

Select one of the following project types. If this does not apply to your project, leave blank.

- Road
- Bridg
- Interchange
- Intersection
- ITS
- Transit/Paratransit
- Enhancement
- SRTS
- Traffic Signal
- Other
- Safety

Project location (provide street name(s) if applicable): WAMPO and MSA Region

To: FFY 2011

From: FFY 2013

Project Scope: Development and implementation of a Wichita/Regional Voluntary Air Quality Improvement Program, see attachment 1 - REVISED

What is the Federal functional classification of the project's location?

Select the Federal Functional Classification of the project's location. If this does not apply to your project, leave blank.

- Interstate
- Other Urban Freeway and Expressway
- Other Principal Arterial
- Minor Arterial
- Urban Collector
- Rural Major Collector
- Rural Minor Collector
- Local
- N/A

Provide any additional information if applicable: See Attachment 1 - REVISED

If necessary, provide any additional information that you feel WAMPO staff will need to know about the project.

What FFY will this project occur?

- (●) 2011
- ( ) 2012
- ( ) 2013
- ( ) 2014

Answer in terms of which FFY (October 1 to September 30) the project is currently programmed in the 2011 TIP (i.e. 2012, 201

☑ Check here if the project will occur in more than one FFY.

If the project is in more than one FFY, identify the FFY's here: 2012, 2013

Answer in terms of which FFY (October 1 to September 30) the project will occur (i.e. 2012, 2013)

Funding Source 2

If the project has a second federal funding source, list

	Federal	State	Local	Total
Other	$0	$0	$0	
PE	$0	$0	$0	$0
ROW	$0	$0	$0	$0
CE	$0	$0	$0	$0
Const	$0	$0	$0	$0
Total	$0	$0	$0	$0

Funding Source 3

If the project has a third federal funding source, list here:

	Federal	State	Local	Total
Other	$0	$0	$0	$0
PE	$0	$0	$0	$0
ROW	$0	$0	$0	$0
CE	$0	$0	$0	$0
Const	$0	$0	$0	$0
Total	$0	$0	$0	$0

Funding Source 4

If the project has a fourth federal funding source, list

	Federal	State	Local	Total
Other	$0	$0	$0	$0
PE	$0	$0	$0	$0
ROW	$0	$0	$0	$0
CE	$0	$0	$0	$0
Const	$0	$0	$0	$0
Total	$0	$0	$0	$0

Funding Source 5

If the project has a fifth federal funding source, list here:

	Federal	State	Local	Total
Other	$0	$0	$0	$0
PE	$0	$0	$0	$0
ROW	$0	$0	$0	$0
CE	$0	$0	$0	$0
Const	$0	$0	$0	$0

Additional Project Information

If the project has a state project number, identify here:

☐ Check here if the project in the MTP 2035 Eligible for Funding Project List?

☐ Check here if the project is in other plans or documents?

If the project is in other plans or documents, identify here.

If the project is included in more than one plan or document, seperate by a comma.

Total	$0	$0	$0	$0

Explain the sources of funding from the above section:

PROJECT NO. 87 N-0560-01

REGIONAL AIR QUALITY IMPROVEMENT PROGRAM

CITY OF WICHITA, KANSAS

AGREEMENT

PARTIES: **DEBRA L. MILLER, Secretary of Transportation**, Kansas Department of Transportation (KDOT), hereinafter referred to as the "Secretary,"

The City of Wichita, Kansas, hereinafter referred to as the "City,"

Collectively referred to as the "Parties."

PURPOSE: The Wichita Area Metropolitan Planning Organization (WAMPO) has been designated by the state of Kansas as the Metropolitan Planning Organization (MPO) for the Wichita metropolitan region. The WAMPO has approved this project which is to be funded by Surface Transportation Program (STP) funds. The City agrees to sponsor the project. The Secretary and the City are empowered by the laws of Kansas to enter into Agreements for the development of such projects, and the Secretary is authorized to administer funds for such projects.

PROJECT: The Secretary and City desire to enter into an Agreement for the project, hereinafter referred to as the "Project," which is described as follows:

Regional Air Quality Improvement Program that will consist of developing and implementing three related components, all part of the larger project. The three components in this program proposal are: 1) development and implementation of a "high ozone day" alert system; 2) development and implementation of an outreach program for voluntary air quality improvements for businesses and organizations; and 3) development and implementation of a Public Education and Community Awareness Program.

EFFECTIVE DATE: The parties in consideration of the premises and to secure the approval of the Project shall mutually agree to perform in accordance with this Agreement as of the date signed by the Secretary or designee.

ARTICLE I

THE SECRETARY AGREES:

1. He or she is authorized by the U.S. Government to administer Surface Transportation Program (STP) funds.

2. The Project shall use federal funds from federal fiscal year (FFY) 2011, consisting of STP funds as allocated by the Secretary to the Project and City funds for the Project.

3. To reimburse the City for eighty percent (80%) of the total actual and eligible costs incurred by the City for the Project, but not to exceed a maximum of $119,998.00. The Secretary shall not be responsible for the total actual costs that exceed $149,998.00 for the Project. **The Secretary's maximum reimbursement is subject to any federal reduction in STP funds.** The Secretary further agrees to make partial payments, for amounts not less than $1,000 and no more frequently than monthly, to the City upon receipt of proper billings and submission of quarterly progress reports.

4. The total cost of the **PROJECT** shall be $149,998, of which, $119,998 is provided by the **SECRETARY** from FY 2011 STP federal funds.

5. Any final amount due for the authorized work performed under this Project will be based upon the City's most recent Single Audit Report available and a desk review of the claim by the Contract Audit Section of the Secretary's Bureau of Fiscal Services.

ARTICLE II

THE CITY AGREES:

1. To be responsible for twenty percent (20%) of the total actual and eligible costs incurred for the Project up to a total of $149,998.00, and one hundred percent (100%) of the total actual and eligible costs that exceed $149,998.00 for FFY 2011. Further, the City agrees to be responsible for one hundred percent (100%) of all costs of items found not eligible.

2. To be responsible for one hundred percent (100%) of any Project costs incurred by the City for the Project prior to the funding for the Project being authorized, obligated, and approved by the Federal Highway Administration.

3. To submit proper billings and progress reports to the Secretary for amounts not less than $1,000 and no more frequently than monthly. Further, if a final report is required for the Project, the City agrees to submit such final report to the Secretary before the final payment is made.

4. By acceptance of this Agreement, acknowledge the final payment is subject to all single audits which cover the time period of the expenses being claimed for reimbursement. The City agrees to refund payments made by the Secretary to the City for items subsequently found to not be eligible for reimbursement by audit. The City further agrees to make such payments to the Secretary within thirty (30) days after receipt of a complete and final billing from the Secretary's Chief of Fiscal Services.

5. It shall defend, indemnify, hold harmless, and save the Secretary or his or her authorized representatives from any and all costs, liabilities, expenses, suits, judgments, damages to

persons or property or claims of any nature whatsoever arising out of or in connection with the provisions or performance of this Agreement by the City's employees or subcontractors. The City shall not be required to defend, indemnify, hold harmless, and save the Secretary for negligent acts or omissions of the Secretary or his or her authorized representatives or employees.

6. To abide by the Special Attachments to this Agreement which are incorporated by reference and made a part of this Agreement.

7. If the City cancels the Project after receiving written approval from the WAMPO Policy Body, it will reimburse the Secretary for any costs incurred by the Secretary prior to the cancellation of the Project. The City agrees to reimburse the Secretary within thirty (30) days after receipt by the City of the Secretary's statement of the costs incurred by the Secretary prior to the cancellation of the Project.

8. Upon request by the Secretary, to provide the Secretary an accounting of all actual, major non-participating costs associated with the Project. This will enable the Secretary to report all costs of the Project to the Kansas legislature.

ARTICLE III

THE PARTIES MUTUALLY AGREE:

1. The Secretary's share of the Project's total, actual, and eligible costs will be funded through the federal aid Surface Transportation Program (STP) Funds allocated to the Wichita Urbanized Area.

2. The Secretary does not assume any liability in connection with the Project. The City shall reimburse the Secretary for any funds approved for this Project and expended by the Secretary for which the Secretary is not reimbursed by the U.S. Government (Federal Aid STP Funds).

3. To participate and cooperate with the Secretary in an annual audit of the Project. If any such audits reveal payments have been made with federal funds by the City for items considered non-participating, the City shall promptly reimburse the Secretary for such items upon notification by the Secretary.

4. Representatives of the Secretary, if the Secretary deems necessary, may make periodic inspections of the Project and the records of the City as may be deemed necessary or desirable. The City will accomplish or direct or cause its subcontractors to accomplish any corrective action or work required by the Secretary's representatives as needed for federal participation. The Secretary does not undertake (for the benefit of the City, its subcontractors, or any third party) the duty to perform the day to day detailed monitoring of the Project, or to catch any errors, omissions, or deviations from the Project's scope of work by the City or its subcontractors.

5 It is the policy of the Secretary to make any final payments to the City for services related to the Highway program in a timely manner. The Single Audit Standards set forth in Federal

O.M.B. Circular A-133, "Audits of States, Local Governments and Non Profit Organizations" in 49 C.F.R. Part 18 (Common Rule), require an audit be performed by an independent certified public accountant in accordance with these standards. All information audited shall comply with 49 C.F.R. Part 18 (Common Rule).

The Secretary may pay any final amount due for the authorized work performed based upon the City's most recent Single Audit Report available and a desk review of the claim by the Contract Audit Section of KDOT's Bureau of Fiscal Services. The City, by acceptance of this Agreement, acknowledges the final payment is subject to all single audits which cover the time period of the expenses being claimed for reimbursement. The Parties agree as the Single Audit Report becomes available for the reimbursement period (normally should occur within a period of 1-2 years), the Secretary will review the Single Audit Report for items which are declared as not eligible for reimbursement. The City agrees to refund payment made by the Secretary to the City for items subsequently found to be not eligible for reimbursement by audit.

6. If they have not already done so, the City shall obtain a D-U-N-S number (Dun & Bradstreet Number). A D-U-N-S number can be obtained at the following website: http://www.dnb.com/us/duns_update/.

7. The City agrees it shall maintain current registrations in the Central Contractor Registration (http://www.ccr.gov) at all times during which they have active federal awards.

8. This Agreement is subject to the approval of the Federal Highway Administration.

9. This Agreement shall be construed by the Laws of Kansas.

10. This Agreement and all contracts entered into under provisions of this Agreement shall be binding upon the Secretary and the City.

11. No third party beneficiaries are intended to be created by this Agreement, nor do the parties herein authorize anyone not a party to this Agreement to maintain a suit for damages pursuant to the terms or provisions of this Agreement.

12. The Special Attachment No. 1 attached hereto, pertaining to the implementation of the Civil Rights Act of 1964, is hereby made a part of this Agreement.

13. The Provisions found in Contractual Provision Attachment (Form DA-146a, Rev. 4-11), which is attached hereto, are hereby incorporated in this contract and made a part thereof.

The signature page immediately follows this paragraph.

IN WITNESS WHEREOF the Parties hereto have caused this Agreement to be signed by their duly authorized officers on the day and year first above written.

ATTEST:

City Clerk (Date)

APPROVED AS TO FORM:

Gary E. Rebenstorf
Director of Law

City of Wichita

Mayor

Kansas Department of Transportation
Debra L. Miller, Secretary of Transportation

By: _____
Jerome T. Younger, P.E. (Date)
Deputy Secretary and
State Transportation Engineer

KANSAS DEPARTMENT OF TRANSPORATION

Special Attachment
To Contracts or Agreements Entered Into
By the Secretary of Transportation of the State of Kansas

NOTE: Whenever this Special Attachment conflicts with provisions of the Document to which it is attached, this Special Attachment shall govern.

THE CIVIL RIGHTS ACT OF 1964, and any amendments thereto,
REHABILITATION ACT OF 1973, and any amendments thereto,
AMERICANS WITH DISABILITIES ACT OF 1990, and any amendments thereto,
AGE DISCRIMINATION ACT OF 1975, and any amendments thereto,
EXECUTIVE ORDER 12898, FEDERAL ACTIONS TO ADDRESS ENVIRONMENTAL JUSTICE IN MINORITY POPULATIONS AND LOW INCOME POPULATIONS 1994, and any amendments thereto,
49 C.F.R. Part 26.1 (DBE Program), and any amendments thereto

NOTIFICATION

The Secretary of Transportation for the State of Kansas, in accordance with the provisions of Title VI and Title VII of the Civil Rights Act of 1964 (78 Stat. 252), §504 of the Rehabilitation Act of 1973 (87 Stat. 355) and the Americans with Disabilities Act of 1990 (42 USC 12101), the Age Discrimination Act of 1975 (42 USC 6101), the Regulations of the U.S. Department of Transportation (49 C.F.R., Part 21, 23, and 27), issued pursuant to such ACT, Executive Order 12898, Federal Actions to Address Environmental Justice in Minority Populations and Low Income Populations (1994), and the DBE Program (49 C.F.R., Part 26.1), hereby notifies all contracting parties that, the contracting parties will affirmatively ensure that this contract will be implemented without discrimination on the grounds of race, religion, color, gender, age, disability, national origin, or minority populations and low income populations as more specifically set out in the following "Nondiscrimination Clauses".

CLARIFICATION

Where the term "consultant" appears in the following "Nondiscrimination Clauses", the term "consultant" is understood to include all parties to contracts or agreements with the Secretary of Transportation of the State of Kansas.

Nondiscrimination Clauses

During the performance of this contract, the consultant, or the consultant's assignees and successors in interest (hereinafter referred to as the "Consultant"), agrees as follows:

1) Compliance with Regulations: The consultant will comply with the Regulations of the U.S. Department of Transportation relative to nondiscrimination in federally-assisted programs of the U.S. Department of Transportation (Title 49, Code of Federal Regulations, Parts 21, 23 and 27, hereinafter referred to as the Regulations), which are herein incorporated by reference and made a part of this contract.

2) Nondiscrimination: The consultant, with regard to the work performed by the consultant after award and prior to the completion of the contract work, will not discriminate on the grounds of race, religion, color, gender, age, disability, national origin or minority populations and low income populations in the selection and retention of subcontractors, including procurements of materials and leases of equipment. The consultant will not participate either directly or indirectly in the discrimination prohibited by Section 21.5 of the Regulations, including employment practices when the contract covers a program set forth in Appendix B of the Regulations.

3) Solicitations for Subcontractors, including Procurements of Material and Equipment: In all solicitations, either competitive bidding or negotiation made by the consultant for work to be performed under a subcontract including procurements of materials and equipment, each potential subcontractor or supplier shall be notified by the consultant of the consultant's obligation under this contract and the Regulations relative to nondiscrimination on the grounds of race, religion, color, gender, age, disability, national origin or minority populations and low income populations.

4) Information and Reports: The consultant will provide all information and reports required by the Regulations, or orders and instructions issued pursuant thereto, and the Secretary of the Transportation of the State of Kansas will be permitted access to the consultant's books, records, accounts, other sources of information, and facilities as may be determined by the Secretary of Transportation of the State of Kansas to be pertinent to ascertain compliance with such Regulations, orders and instructions. Where any information required of a consultant is in the exclusive possession of another who fails or refuses to furnish this information, the consultant shall so certify to the Secretary of Transportation of the State of Kansas and shall set forth what efforts it has made to obtain the information.

5) Employment: The consultant will not discriminate against any employee or applicant for employment because of race, religion, color, gender, age, disability, or natural origin.

6) Sanctions for Noncompliance: In the event of the consultant's noncompliance with the nondiscrimination provisions of this contract, the Secretary of Transportation of the State of Kansas shall impose such contract sanctions as the Secretary of Transportation of the State of Kansas may determine to be appropriate, including, but not limited to,

   (a) withholding of payments to the consultant under the contract until the contractor complies, and/or

   (b) cancellation, termination or suspension of the contract, in whole or in part.

7) Disadvantaged Business Obligation

   (a) Disadvantaged Business as defined in the Regulations shall have a level playing field to compete for contracts financed in whole or in part with federal funds under this contract.

   (b) All necessary and reasonable steps shall be taken in accordance with the Regulations to ensure that Disadvantaged Businesses have equal opportunity to compete for and perform contracts. No person(s) shall be discriminated against on the basis of race, color, gender, or national origin in the award and performance of federally-assisted contracts.

   (c) The contractor, sub recipient or subcontractor shall not discriminate on the basis of race, color, national origin, or sex in the performance of this contract. The contractor shall carry out applicable requirements of 49 C.F.R. Part 26 in the award and administration of Federally-assisted contracts. Failure by the contractor to carry out these requirements is a material breach of this contract, which may result in the termination of this contract or such other remedy, as the recipient deems appropriate.

8) Executive Order 12898

   (a) To the extent permitted by existing law, and whenever practical and appropriate, all necessary and reasonable steps shall be taken in accordance with Executive Order 12898 to collect, maintain, and analyze information on the race, color, national origin and income level of persons affected by programs, policies and activities of the Secretary of Transportation of the State of Kansas and use such information in complying with this Order.

9) Incorporation of Provisions: The consultant will include the provisions of paragraphs (1) through (8) in every subcontract, including procurements of materials and equipment, unless exempt by the Regulations, order, or instructions issued pursuant thereto. The consultant will take such action with respect to any subcontract or procurement as the Secretary of Transportation of the State of Kansas may direct as a means of enforcing such provisions including sanctions for noncompliance: PROVIDED, however, that, in the event a consultant becomes involved in, or is threatened with, litigation with a subcontractor or supplier as a result of such direction, the consultant may request the State to enter into such litigation to protect the interests of the State.

State of Kansas
Department of Administration
DA-146a (Rev. 04-11)

CONTRACTUAL PROVISIONS ATTACHMENT

Important: This form contains mandatory contract provisions and must be attached to or incorporated in all copies of any contractual agreement. If it is attached to the vendor/contractor's standard contract form, then that form must be altered to contain the following provision:

"The Provisions found in Contractual Provisions Attachment (Form DA-146a, Rev. 04-11), which is attached hereto, are hereby incorporated in this contract and made a part thereof."

The parties agree that the following provisions are hereby incorporated into the contract to which it is attached and made a part thereof, said contract being the 13th day of September, 2011.

1. **Terms Herein Controlling Provisions**: It is expressly agreed that the terms of each and every provision in this attachment shall prevail and control over the terms of any other conflicting provision in any other document relating to and a part of the contract in which this attachment is incorporated. Any terms that conflict or could be interpreted to conflict with this attachment are nullified.

2. **Kansas Law and Venue**: This contract shall be subject to, governed by, and construed according to the laws of the State of Kansas, and jurisdiction and venue of any suit in connection with this contract shall reside only in courts located in the State of Kansas.

3. **Termination Due To Lack Of Funding Appropriation**: If, in the judgment of the Director of Accounts and Reports, Department of Administration, sufficient funds are not appropriated to continue the function performed in this agreement and for the payment of the charges-hereunder, State may terminate this agreement at the end of its current fiscal year. State agrees to give written notice of termination to contractor at least 30 days prior to the end of its current fiscal year, and shall give such notice for a greater period prior to the end of such fiscal year as may be provided in this contract, except that such notice shall not be required prior to 90 days before the end of such fiscal year. Contractor shall have the right, at the end of such fiscal year, to take possession of any equipment provided State under the contract. State will pay to the contractor all regular contractual payments incurred through the end of such fiscal year, plus contractual charges incidental to the return of any such equipment. Upon termination of the agreement by State, title to any such equipment shall revert to contractor at the end of the State's current fiscal year. The termination of the contract pursuant to this paragraph shall not cause any penalty to be charged to the agency or the contractor.

4. **Disclaimer Of Liability**: No provision of this contract will be given effect that attempts to require the State of Kansas or its agencies to defend, hold harmless, or indemnify any contractor or third party for any acts or omissions. The liability of the State of Kansas is defined under the Kansas Tort Claims Act (K.S.A. 75-6101 et seq.).

5. **Anti-Discrimination Clause**: The contractor agrees: (a) to comply with the Kansas Act Against Discrimination (K.S.A. 44-1001 et seq.) and the Kansas Age Discrimination in Employment Act (K.S.A. 44-1111 et seq.) and the applicable provisions of the Americans With Disabilities Act (42 U.S.C. 12101 et seq.) (ADA) and to not discriminate against any person because of race, religion, color, sex, disability, national origin or ancestry, or age in the admission or access to, or treatment or employment in, its programs or activities; (b) to include in all solicitations or advertisements for employees, the phrase "equal opportunity employer"; (c) to comply with the reporting requirements set out at K.S.A. 44-1031 and K.S.A. 44-1116; (d) to include those provisions in every subcontract or purchase order so that they are binding upon such subcontractor or vendor; (e) that a failure to comply with the reporting requirements of (c) above or if the contractor is found guilty of any violation of such acts by the Kansas Human Rights Commission, such violation shall constitute a breach of contract and the contract may be cancelled, terminated or suspended, in whole or in part, by the contracting state agency or the Kansas Department of Administration; (f) if it is determined that the contractor has violated applicable provisions of ADA, such violation shall constitute a breach of contract and the contract may be cancelled, terminated or suspended, in whole or in part, by the contracting state agency or the Kansas Department of Administration.

   Contractor agrees to comply with all applicable state and federal anti-discrimination laws.

   The provisions of this paragraph number 5 (with the exception of those provisions relating to the ADA) are not applicable to a contractor who employs fewer than four employees during the term of such contract or whose contracts with the contracting State agency cumulatively total $5,000 or less during the fiscal year of such agency.

6. **Acceptance Of Contract**: This contract shall not be considered accepted, approved or otherwise effective until the statutorily required approvals and certifications have been given.

7. **Arbitration, Damages, Warranties**: Notwithstanding any language to the contrary, no interpretation of this contract shall find that the State or its agencies have agreed to binding arbitration, or the payment of damages or penalties. Further, the State of Kansas and its agencies do not agree to pay attorney fees, costs, or late payment charges beyond those available under the Kansas Prompt Payment Act (K.S.A. 75-6403), and no provision will be given effect that attempts to exclude, modify, disclaim or otherwise attempt to limit any damages available to the State of Kansas or its agencies at law, including but not limited to the implied warranties of merchantability and fitness for a particular purpose.

8. **Representative's Authority To Contract**: By signing this contract, the representative of the contractor thereby represents that such person is duly authorized by the contractor to execute this contract on behalf of the contractor and that the contractor agrees to be bound by the provisions thereof.

9. **Responsibility For Taxes**: The State of Kansas and its agencies shall not be responsible for, nor indemnify a contractor for, any federal, state or local taxes which may be imposed or levied upon the subject matter of this contract.

10. **Insurance**: The State of Kansas and its agencies shall not be required to purchase any insurance against loss or damage to property or any other subject matter relating to this contract, nor shall this contract require them to establish a "self-insurance" fund to protect against any such loss or damage. Subject to the provisions of the Kansas Tort Claims Act (K.S.A. 75-6101 et seq.), the contractor shall bear the risk of any loss or damage to any property in which the contractor holds title.

11. **Information**: **No provision of this contract shall be construed as limiting the Legislative Division of Post Audit from having access to information pursuant to K.S.A. 46-1101 et seq.**

12. **The Eleventh Amendment**: "The Eleventh Amendment is an inherent and incumbent protection with the State of Kansas and need not be reserved, but prudence requires the State to reiterate that nothing related to this contract shall be deemed a waiver of the Eleventh Amendment."

RESOLUTION NO. 08-306

A RESOLUTION OF THE GOVERNING BODY OF THE CITY OF WICHITA, KANSAS, ENCOURAGING A COMMUNITY RESPONSE FOR CLEAN AIR

WHEREAS, clean air is critical to the quality of life of Wichita citizens and our surrounding neighbors, and

WHEREAS, the level of ozone in Wichita air samples has been steadily increasing; posing a threat to the area's economy and health, and

WHEREAS, non-compliance with newly-lowered EPA standards for ozone levels will result in as much as a $10 million annual negative impact on our local economy, and

WHEREAS, the personal actions of citizens of Wichita and surrounding communities can have a direct effect on the lowering of our ozone levels, and

WHEREAS, businesses and industries in the Wichita area can also play an important role in maintaining our air quality;

NOW, THEREFORE, BE IT RESOLVED BY THE GOVERNING BODY OF THE CITY OF WICHITA THAT

The City of Wichita staff shall take appropriate action for attainment of EPA ozone standards,

And, all local governments, businesses, industry and private citizens in the Wichita Metropolitan Service Area (MSA) are encouraged to join the City of Wichita in finding solutions to reduce air pollution and protect the well being of our community;

PASSED AND APPROVED THIS 17th DAY OF JUNE 2008.

THE CITY OF WICHITA, KANSAS

Carl Brewer, Mayor

ATTEST:

Karen Sublett, CMC

Karen Sublett, City Clerk

PROJECT NO. 87 N-0560-01

REGIONAL AIR QUALITY IMPROVEMENT PROGRAM

CITY OF WICHITA, KANSAS

A G R E E M E N T

PARTIES: **DEBRA L. MILLER, Secretary of Transportation**, Kansas Department of Transportation (KDOT), hereinafter referred to as the "Secretary,"

The City of Wichita, Kansas, hereinafter referred to as the "City,"

Collectively referred to as the "Parties."

PURPOSE: The Wichita Area Metropolitan Planning Organization (WAMPO) has been designated by the state of Kansas as the Metropolitan Planning Organization (MPO) for the Wichita metropolitan region. The WAMPO has approved this project which is to be funded by Surface Transportation Program (STP) funds. The City agrees to sponsor the project. The Secretary and the City are empowered by the laws of Kansas to enter into Agreements for the development of such projects, and the Secretary is authorized to administer funds for such projects.

PROJECT: The Secretary and City desire to enter into an Agreement for the project, hereinafter referred to as the "Project," which is described as follows:

Regional Air Quality Improvement Program that will consist of developing and implementing three related components, all part of the larger project. The three components in this program proposal are: 1) development and implementation of a "high ozone day" alert system; 2) development and implementation of an outreach program for voluntary air quality improvements for businesses and organizations; and 3) development and implementation of a Public Education and Community Awareness Program.

EFFECTIVE DATE: The parties in consideration of the premises and to secure the approval of the Project shall mutually agree to perform in accordance with this Agreement as of the date signed by the Secretary or designee.

ARTICLE I

THE SECRETARY AGREES:

1. He or she is authorized by the U.S. Government to administer Surface Transportation Program (STP) funds.

2. The Project shall use federal funds from federal fiscal year (FFY) 2011, consisting of STP funds as allocated by the Secretary to the Project and City funds for the Project.

3. To reimburse the City for eighty percent (80%) of the total actual and eligible costs incurred by the City for the Project, but not to exceed ***a maximum*** of $119,998.00. The Secretary shall not be responsible for the total actual costs that exceed $149,998.00 for the Project. **The Secretary's maximum reimbursement is subject to any federal reduction in STP funds.** The Secretary further agrees to make partial payments, for amounts not less than $1,000 and no more frequently than monthly, to the City upon receipt of proper billings and submission of quarterly progress reports.

4. The total cost of the **PROJECT** shall be $149,998, of which, $119,998 is provided by the **SECRETARY** from FY 2011 STP federal funds and twenty percent (20%) is being provided by the City.

5. Any final amount due for the authorized work performed under this Project will be based upon the City's most recent Single Audit Report available and a desk review of the claim by the Contract Audit Section of the Secretary's Bureau of Fiscal Services.

ARTICLE II

THE CITY AGREES:

1. To be responsible for twenty percent (20%) of the total actual and eligible costs incurred for the Project up to a total of $149,998.00, and one hundred percent (100%) of the total actual and eligible costs that exceed $149,998.00 for FFY 2011. Further, the City agrees to be responsible for one hundred percent (100%) of all costs of items found not eligible.

2. To be responsible for one hundred percent (100%) of any Project costs incurred by the City for the Project prior to the funding for the Project being authorized, obligated, and approved by the Federal Highway Administration.

3. To submit proper billings and progress reports to the Secretary for amounts not less than $1,000 and no more frequently than monthly. Further, if a final report is required for the Project, the City agrees to submit such final report to the Secretary before the final payment is made.

4. By acceptance of this Agreement, acknowledge the final payment is subject to all single audits which cover the time period of the expenses being claimed for reimbursement. The City agrees to refund payments made by the Secretary to the City for items subsequently found to not be eligible for reimbursement by audit. The City further agrees to make such payments to the Secretary within thirty (30) days after receipt of a complete and final billing from the Secretary's Chief of Fiscal Services.

6. It shall defend, indemnify, hold harmless, and save the Secretary or his or her authorized representatives from any and all costs, liabilities, expenses, suits, judgments, damages to persons or property or claims of any nature whatsoever arising out of or in connection with the provisions or performance of this Agreement by the City's employees or subcontractors. The City shall not be required to defend, indemnify, hold harmless, and save the Secretary for negligent acts or omissions of the Secretary or his or her authorized representatives or employees.

7. If the City cancels the Project after receiving written approval from the WAMPO Policy Body, it will reimburse the Secretary for any costs incurred by the Secretary prior to the cancellation of the Project. The City agrees to reimburse the Secretary within thirty (30) days after receipt by the City of the Secretary's statement of the costs incurred by the Secretary prior to the cancellation of the Project.

8. Upon request by the Secretary, to provide the Secretary an accounting of all actual, major non-participating costs associated with the Project. This will enable the Secretary to report all costs of the Project to the Kansas legislature.

ARTICLE III

THE SECRETARY AND THE WAMPO MUTUALLY AGREE:

1. The Secretary's share of the Project's total, actual, and eligible costs will be funded through the federal aid Surface Transportation Program (STP) Funds allocated to the Wichita Urbanized Area.

2. The Secretary does not assume any liability in connection with the Project. The City shall reimburse the Secretary for any funds approved for this Project and expended by the Secretary for which the Secretary is not reimbursed by the U.S. Government (Federal Aid STP Funds).

3. To participate and cooperate with the Secretary in an annual audit of the Project. If any such audits reveal payments have been made with federal funds by the City for items considered non-participating, the WAMPO shall promptly reimburse the Secretary for such items upon notification by the Secretary.

4. Representatives of the Secretary, if the Secretary deems necessary, may make periodic inspections of the Project and the records of the City as may be deemed necessary or desirable. The City will accomplish or direct or cause its subcontractors to accomplish any corrective action or work required by the Secretary's representatives as needed for federal participation. The Secretary does not undertake (for the benefit of the City, its subcontractors, or any third party) the duty to perform the day to day detailed monitoring of the Project, or to catch any errors, omissions, or deviations from the Project's scope of work by the City or its subcontractors.

5. The Single Audit Standards set forth in Federal O.M. B. Circular A-133,"Audits of State and Local Governments" and in 49 C.F.R. 18 (Common Rule), require an entity must comply in accordance with those standards. All information audited shall comply with 49 C.F.R. 18 (Common Rule).

6. As the Single Audit Report becomes available for the reimbursement period (normally occurring within a period of one to two years), the Secretary will review the Single Audit Report for items which are declared as not eligible for reimbursement.

7. This Agreement is subject to the approval of the Federal Highway Administration.

8. This Agreement shall be construed by the Laws of Kansas.

9. This Agreement and all contracts entered into under provisions of this Agreement shall be binding upon the Secretary and the City.

10. No third party beneficiaries are intended to be created by this Agreement, nor do the parties herein authorize anyone not a party to this Agreement to maintain a suit for damages pursuant to the terms or provisions of this Agreement.

11. The Special Attachment No. 1 attached hereto, pertaining to the implementation of the Civil Rights Act of 1964, is hereby made a part of this Agreement.

12. The Provisions found in Contractual Provision Attachment (Form DA-146a, Rev. 1-01), which is attached hereto, are hereby incorporated in this contract and made a part thereof.

ATTEST:

City of Wichita

_____
(City Clerk) (Date)

_____
Mayor

Kansas Department of Transportation
Debra L. Miller, Secretary of Transportation

By:_____
Jerome T. Younger, P.E. (Date)
Deputy Secretary for Engineering /
State Transportation Engineer

PROJECT NO. 87 N-0560-01

REGIONAL AIR QUALITY IMPROVEMENT PROGRAM

CITY OF WICHITA, KANSAS

AGREEMENT

PARTIES: **DEBRA L. MILLER, Secretary of Transportation**, Kansas Department of Transportation (KDOT), hereinafter referred to as the "Secretary,"

The City of Wichita, Kansas, hereinafter referred to as the "City,"

Collectively referred to as the "Parties."

PURPOSE: The Wichita Area Metropolitan Planning Organization (WAMPO) has been designated by the state of Kansas as the Metropolitan Planning Organization (MPO) for the Wichita metropolitan region. The WAMPO has approved this project which is to be funded by Surface Transportation Program (STP) funds. The City agrees to sponsor the project. The Secretary and the City are empowered by the laws of Kansas to enter into Agreements for the development of such projects, and the Secretary is authorized to administer funds for such projects.

PROJECT: The Secretary and City desire to enter into an Agreement for the project, hereinafter referred to as the "Project," which is described as follows:

Regional Air Quality Improvement Program that will consist of developing and implementing three related components, all part of the larger project. The three components in this program proposal are: 1) development and implementation of a "high ozone day" alert system; 2) development and implementation of an outreach program for voluntary air quality improvements for businesses and organizations; and 3) development and implementation of a Public Education and Community Awareness Program.

EFFECTIVE DATE: The parties in consideration of the premises and to secure the approval of the Project shall mutually agree to perform in accordance with this Agreement as of the date signed by the Secretary or designee.

ARTICLE I

THE SECRETARY AGREES:

1. He or she is authorized by the U.S. Government to administer Surface Transportation Program (STP) funds.

2. The Project shall use federal funds from federal fiscal year (FFY) 2011, consisting of STP funds as allocated by the Secretary to the Project and City funds for the Project.

3. To reimburse the City for eighty percent (80%) of the total actual and eligible costs incurred by the City for the Project, but not to exceed a maximum of $119,998.00. The Secretary shall not be responsible for the total actual costs that exceed $149,998.00 for the Project. **The Secretary's maximum reimbursement is subject to any federal reduction in STP funds.** The Secretary further agrees to make partial payments, for amounts not less than $1,000 and no more frequently than monthly, to the City upon receipt of proper billings and submission of quarterly progress reports.

4. The total cost of the **PROJECT** shall be $149,998, of which, $119,998 is provided by the **SECRETARY** from FY 2011 STP federal funds.

5. Any final amount due for the authorized work performed under this Project will be based upon the City's most recent Single Audit Report available and a desk review of the claim by the Contract Audit Section of the Secretary's Bureau of Fiscal Services.

ARTICLE II

THE CITY AGREES:

1. To be responsible for twenty percent (20%) of the total actual and eligible costs incurred for the Project up to a total of $149,998.00, and one hundred percent (100%) of the total actual and eligible costs that exceed $149,998.00 for FFY 2011. Further, the City agrees to be responsible for one hundred percent (100%) of all costs of items found not eligible.

2. To be responsible for one hundred percent (100%) of any Project costs incurred by the City for the Project prior to the funding for the Project being authorized, obligated, and approved by the Federal Highway Administration.

3. To submit proper billings and progress reports to the Secretary for amounts not less than $1,000 and no more frequently than monthly. Further, if a final report is required for the Project, the City agrees to submit such final report to the Secretary before the final payment is made.

4. By acceptance of this Agreement, acknowledge the final payment is subject to all single audits which cover the time period of the expenses being claimed for reimbursement. The City agrees to refund payments made by the Secretary to the City for items subsequently found to not be eligible for reimbursement by audit. The City further agrees to make such payments to the Secretary within thirty (30) days after receipt of a complete and final billing from the Secretary's Chief of Fiscal Services.

5. It shall defend, indemnify, hold harmless, and save the Secretary or his or her authorized representatives from any and all costs, liabilities, expenses, suits, judgments, damages to

persons or property or claims of any nature whatsoever arising out of or in connection with the provisions or performance of this Agreement by the City's employees or subcontractors. The City shall not be required to defend, indemnify, hold harmless, and save the Secretary for negligent acts or omissions of the Secretary or his or her authorized representatives or employees.

6. To abide by the Special Attachments to this Agreement which are incorporated by reference and made a part of this Agreement.

7. If the City cancels the Project after receiving written approval from the WAMPO Policy Body, it will reimburse the Secretary for any costs incurred by the Secretary prior to the cancellation of the Project. The City agrees to reimburse the Secretary within thirty (30) days after receipt by the City of the Secretary's statement of the costs incurred by the Secretary prior to the cancellation of the Project.

8. Upon request by the Secretary, to provide the Secretary an accounting of all actual, major non-participating costs associated with the Project. This will enable the Secretary to report all costs of the Project to the Kansas legislature.

ARTICLE III

THE PARTIES MUTUALLY AGREE:

1. The Secretary's share of the Project's total, actual, and eligible costs will be funded through the federal aid Surface Transportation Program (STP) Funds allocated to the Wichita Urbanized Area.

2. The Secretary does not assume any liability in connection with the Project. The City shall reimburse the Secretary for any funds approved for this Project and expended by the Secretary for which the Secretary is not reimbursed by the U.S. Government (Federal Aid STP Funds).

3. To participate and cooperate with the Secretary in an annual audit of the Project. If any such audits reveal payments have been made with federal funds by the City for items considered non-participating, the City shall promptly reimburse the Secretary for such items upon notification by the Secretary.

4. Representatives of the Secretary, if the Secretary deems necessary, may make periodic inspections of the Project and the records of the City as may be deemed necessary or desirable. The City will accomplish or direct or cause its subcontractors to accomplish any corrective action or work required by the Secretary's representatives as needed for federal participation. The Secretary does not undertake (for the benefit of the City, its subcontractors, or any third party) the duty to perform the day to day detailed monitoring of the Project, or to catch any errors, omissions, or deviations from the Project's scope of work by the City or its subcontractors.

5 It is the policy of the Secretary to make any final payments to the City for services related to the Highway program in a timely manner. The Single Audit Standards set forth in Federal

O.M.B. Circular A-133, "Audits of States, Local Governments and Non Profit Organizations" in 49 C.F.R. Part 18 (Common Rule), require an audit be performed by an independent certified public accountant in accordance with these standards. All information audited shall comply with 49 C.F.R. Part 18 (Common Rule).

The Secretary may pay any final amount due for the authorized work performed based upon the City's most recent Single Audit Report available and a desk review of the claim by the Contract Audit Section of KDOT's Bureau of Fiscal Services. The City, by acceptance of this Agreement, acknowledges the final payment is subject to all single audits which cover the time period of the expenses being claimed for reimbursement. The Parties agree as the Single Audit Report becomes available for the reimbursement period (normally should occur within a period of 1-2 years), the Secretary will review the Single Audit Report for items which are declared as not eligible for reimbursement. The City agrees to refund payment made by the Secretary to the City for items subsequently found to be not eligible for reimbursement by audit.

6. If they have not already done so, the City shall obtain a D-U-N-S number (Dun & Bradstreet Number). A D-U-N-S number can be obtained at the following website: http://www.dnb.com/us/duns_update/.

7. The City agrees it shall maintain current registrations in the Central Contractor Registration (http://www.ccr.gov) at all times during which they have active federal awards.

8. This Agreement is subject to the approval of the Federal Highway Administration.

9. This Agreement shall be construed by the Laws of Kansas.

10. This Agreement and all contracts entered into under provisions of this Agreement shall be binding upon the Secretary and the City.

11. No third party beneficiaries are intended to be created by this Agreement, nor do the parties herein authorize anyone not a party to this Agreement to maintain a suit for damages pursuant to the terms or provisions of this Agreement.

12. The Special Attachment No. 1 attached hereto, pertaining to the implementation of the Civil Rights Act of 1964, is hereby made a part of this Agreement.

13. The Provisions found in Contractual Provision Attachment (Form DA-146a, Rev. 4-11), which is attached hereto, are hereby incorporated in this contract and made a part thereof.

The signature page immediately follows this paragraph.

IN WITNESS WHEREOF the Parties hereto have caused this Agreement to be signed by their duly authorized officers on the day and year first above written.

ATTEST:

City Clerk (Date)

APPROVED AS TO FORM:

Gary E. Rebenstorf
Director of Law

City of Wichita

Mayor

Kansas Department of Transportation
Debra L. Miller, Secretary of Transportation

By: _____
Jerome T. Younger, P.E. (Date)
Deputy Secretary and
State Transportation Engineer

KANSAS DEPARTMENT OF TRANSPORATION

Special Attachment
To Contracts or Agreements Entered Into
By the Secretary of Transportation of the State of Kansas

NOTE: Whenever this Special Attachment conflicts with provisions of the Document to which it is attached, this Special Attachment shall govern.

THE CIVIL RIGHTS ACT OF 1964, and any amendments thereto,
REHABILITATION ACT OF 1973, and any amendments thereto,
AMERICANS WITH DISABILITIES ACT OF 1990, and any amendments thereto,
AGE DISCRIMINATION ACT OF 1975, and any amendments thereto,
EXECUTIVE ORDER 12898, FEDERAL ACTIONS TO ADDRESS ENVIRONMENTAL JUSTICE IN MINORITY POPULATIONS AND LOW INCOME POPULATIONS 1994, and any amendments thereto,
49 C.F.R. Part 26.1 (DBE Program), and any amendments thereto

NOTIFICATION

The Secretary of Transportation for the State of Kansas, in accordance with the provisions of Title VI and Title VII of the Civil Rights Act of 1964 (78 Stat. 252), §504 of the Rehabilitation Act of 1973 (87 Stat. 355) and the Americans with Disabilities Act of 1990 (42 USC 12101), the Age Discrimination Act of 1975 (42 USC 6101), the Regulations of the U.S. Department of Transportation (49 C.F.R., Part 21, 23, and 27), issued pursuant to such ACT, Executive Order 12898, Federal Actions to Address Environmental Justice in Minority Populations and Low Income Populations (1994), and the DBE Program (49 C.F.R., Part 26.1), hereby notifies all contracting parties that, the contracting parties will affirmatively ensure that this contract will be implemented without discrimination on the grounds of race, religion, color, gender, age, disability, national origin, or minority populations and low income populations as more specifically set out in the following "Nondiscrimination Clauses".

CLARIFICATION

Where the term "consultant" appears in the following "Nondiscrimination Clauses", the term "consultant" is understood to include all parties to contracts or agreements with the Secretary of Transportation of the State of Kansas.

Nondiscrimination Clauses

During the performance of this contract, the consultant, or the consultant's assignees and successors in interest (hereinafter referred to as the "Consultant"), agrees as follows:

1) Compliance with Regulations: The consultant will comply with the Regulations of the U.S. Department of Transportation relative to nondiscrimination in federally-assisted programs of the U.S. Department of Transportation (Title 49, Code of Federal Regulations, Parts 21, 23 and 27, hereinafter referred to as the Regulations), which are herein incorporated by reference and made a part of this contract.

2) Nondiscrimination: The consultant, with regard to the work performed by the consultant after award and prior to the completion of the contract work, will not discriminate on the grounds of race, religion, color, gender, age, disability, national origin or minority populations and low income populations in the selection and retention of subcontractors, including procurements of materials and leases of equipment. The consultant will not participate either directly or indirectly in the discrimination prohibited by Section 21.5 of the Regulations, including employment practices when the contract covers a program set forth in Appendix B of the Regulations.

3) Solicitations for Subcontractors, including Procurements of Material and Equipment: In all solicitations, either competitive bidding or negotiation made by the consultant for work to be performed under a subcontract including procurements of materials and equipment, each potential subcontractor or supplier shall be notified by the consultant of the consultant's obligation under this contract and the Regulations relative to nondiscrimination on the grounds of race, religion, color, gender, age, disability, national origin or minority populations and low income populations.

4) Information and Reports: The consultant will provide all information and reports required by the Regulations, or orders and instructions issued pursuant thereto, and the Secretary of the Transportation of the State of Kansas will be permitted access to the consultant's books, records, accounts, other sources of information, and facilities as may be determined by the Secretary of Transportation of the State of Kansas to be pertinent to ascertain compliance with such Regulations, orders and instructions. Where any information required of a consultant is in the exclusive possession of another who fails or refuses to furnish this information, the consultant shall so certify to the Secretary of Transportation of the State of Kansas and shall set forth what efforts it has made to obtain the information.

5) Employment: The consultant will not discriminate against any employee or applicant for employment because of race, religion, color, gender, age, disability, or natural origin.

6) Sanctions for Noncompliance: In the event of the consultant's noncompliance with the nondiscrimination provisions of this contract, the Secretary of Transportation of the State of Kansas shall impose such contract sanctions as the Secretary of Transportation of the State of Kansas may determine to be appropriate, including, but not limited to,

   (a) withholding of payments to the consultant under the contract until the contractor complies, and/or

   (b) cancellation, termination or suspension of the contract, in whole or in part.

7) Disadvantaged Business Obligation

   (a) Disadvantaged Business as defined in the Regulations shall have a level playing field to compete for contracts financed in whole or in part with federal funds under this contract.

   (b) All necessary and reasonable steps shall be taken in accordance with the Regulations to ensure that Disadvantaged Businesses have equal opportunity to compete for and perform contracts. No person(s) shall be discriminated against on the basis of race, color, gender, or national origin in the award and performance of federally-assisted contracts.

   (c) The contractor, sub recipient or subcontractor shall not discriminate on the basis of race, color, national origin, or sex in the performance of this contract. The contractor shall carry out applicable requirements of 49 C.F.R. Part 26 in the award and administration of Federally-assisted contracts. Failure by the contractor to carry out these requirements is a material breach of this contract, which may result in the termination of this contract or such other remedy, as the recipient deems appropriate.

8) Executive Order 12898

   (a) To the extent permitted by existing law, and whenever practical and appropriate, all necessary and reasonable steps shall be taken in accordance with Executive Order 12898 to collect, maintain, and analyze information on the race, color, national origin and income level of persons affected by programs, policies and activities of the Secretary of Transportation of the State of Kansas and use such information in complying with this Order.

9) Incorporation of Provisions: The consultant will include the provisions of paragraphs (1) through (8) in every subcontract, including procurements of materials and equipment, unless exempt by the Regulations, order, or instructions issued pursuant thereto. The consultant will take such action with respect to any subcontract or procurement as the Secretary of Transportation of the State of Kansas may direct as a means of enforcing such provisions including sanctions for noncompliance: PROVIDED, however, that, in the event a consultant becomes involved in, or is threatened with, litigation with a subcontractor or supplier as a result of such direction, the consultant may request the State to enter into such litigation to protect the interests of the State.

State of Kansas
Department of Administration
DA-146a (Rev. 04-11)

CONTRACTUAL PROVISIONS ATTACHMENT

Important: This form contains mandatory contract provisions and must be attached to or incorporated in all copies of any contractual agreement. If it is attached to the vendor/contractor's standard contract form, then that form must be altered to contain the following provision:

"The Provisions found in Contractual Provisions Attachment (Form DA-146a, Rev. 04-11), which is attached hereto, are hereby incorporated in this contract and made a part thereof."

The parties agree that the following provisions are hereby incorporated into the contract to which it is attached and made a part thereof, said contract being the 13th day of September, 2011.

1. **Terms Herein Controlling Provisions**: It is expressly agreed that the terms of each and every provision in this attachment shall prevail and control over the terms of any other conflicting provision in any other document relating to and a part of the contract in which this attachment is incorporated. Any terms that conflict or could be interpreted to conflict with this attachment are nullified.

2. **Kansas Law and Venue**: This contract shall be subject to, governed by, and construed according to the laws of the State of Kansas, and jurisdiction and venue of any suit in connection with this contract shall reside only in courts located in the State of Kansas.

3. **Termination Due To Lack Of Funding Appropriation**: If, in the judgment of the Director of Accounts and Reports, Department of Administration, sufficient funds are not appropriated to continue the function performed in this agreement and for the payment of the charges-hereunder, State may terminate this agreement at the end of its current fiscal year. State agrees to give written notice of termination to contractor at least 30 days prior to the end of its current fiscal year, and shall give such notice for a greater period prior to the end of such fiscal year as may be provided in this contract, except that such notice shall not be required prior to 90 days before the end of such fiscal year. Contractor shall have the right, at the end of such fiscal year, to take possession of any equipment provided State under the contract. State will pay to the contractor all regular contractual payments incurred through the end of such fiscal year, plus contractual charges incidental to the return of any such equipment. Upon termination of the agreement by State, title to any such equipment shall revert to contractor at the end of the State's current fiscal year. The termination of the contract pursuant to this paragraph shall not cause any penalty to be charged to the agency or the contractor.

4. **Disclaimer Of Liability**: No provision of this contract will be given effect that attempts to require the State of Kansas or its agencies to defend, hold harmless, or indemnify any contractor or third party for any acts or omissions. The liability of the State of Kansas is defined under the Kansas Tort Claims Act (K.S.A. 75-6101 et seq.).

5. **Anti-Discrimination Clause**: The contractor agrees: (a) to comply with the Kansas Act Against Discrimination (K.S.A. 44-1001 et seq.) and the Kansas Age Discrimination in Employment Act (K.S.A. 44-1111 et seq.) and the applicable provisions of the Americans With Disabilities Act (42 U.S.C. 12101 et seq.) (ADA) and to not discriminate against any person because of race, religion, color, sex, disability, national origin or ancestry, or age in the admission or access to, or treatment or employment in, its programs or activities; (b) to include in all solicitations or advertisements for employees, the phrase "equal opportunity employer"; (c) to comply with the reporting requirements set out at K.S.A. 44-1031 and K.S.A. 44-1116; (d) to include those provisions in every subcontract or purchase order so that they are binding upon such subcontractor or vendor; (e) that a failure to comply with the reporting requirements of (c) above or if the contractor is found guilty of any violation of such acts by the Kansas Human Rights Commission, such violation shall constitute a breach of contract and the contract may be cancelled, terminated or suspended, in whole or in part, by the contracting state agency or the Kansas Department of Administration; (f) if it is determined that the contractor has violated applicable provisions of ADA, such violation shall constitute a breach of contract and the contract may be cancelled, terminated or suspended, in whole or in part, by the contracting state agency or the Kansas Department of Administration.

   Contractor agrees to comply with all applicable state and federal anti-discrimination laws.

   The provisions of this paragraph number 5 (with the exception of those provisions relating to the ADA) are not applicable to a contractor who employs fewer than four employees during the term of such contract or whose contracts with the contracting State agency cumulatively total $5,000 or less during the fiscal year of such agency.

6. **Acceptance Of Contract**: This contract shall not be considered accepted, approved or otherwise effective until the statutorily required approvals and certifications have been given.

7. **Arbitration, Damages, Warranties**: Notwithstanding any language to the contrary, no interpretation of this contract shall find that the State or its agencies have agreed to binding arbitration, or the payment of damages or penalties. Further, the State of Kansas and its agencies do not agree to pay attorney fees, costs, or late payment charges beyond those available under the Kansas Prompt Payment Act (K.S.A. 75-6403), and no provision will be given effect that attempts to exclude, modify, disclaim or otherwise attempt to limit any damages available to the State of Kansas or its agencies at law, including but not limited to the implied warranties of merchantability and fitness for a particular purpose.

8. **Representative's Authority To Contract**: By signing this contract, the representative of the contractor thereby represents that such person is duly authorized by the contractor to execute this contract on behalf of the contractor and that the contractor agrees to be bound by the provisions thereof.

9. **Responsibility For Taxes**: The State of Kansas and its agencies shall not be responsible for, nor indemnify a contractor for, any federal, state or local taxes which may be imposed or levied upon the subject matter of this contract.

10. **Insurance**: The State of Kansas and its agencies shall not be required to purchase any insurance against loss or damage to property or any other subject matter relating to this contract, nor shall this contract require them to establish a "self-insurance" fund to protect against any such loss or damage. Subject to the provisions of the Kansas Tort Claims Act (K.S.A. 75-6101 et seq.), the contractor shall bear the risk of any loss or damage to any property in which the contractor holds title.

11. **Information**: **No provision of this contract shall be construed as limiting the Legislative Division of Post Audit from having access to information pursuant to K.S.A. 46-1101 et seq.**

12. **The Eleventh Amendment**: "The Eleventh Amendment is an inherent and incumbent protection with the State of Kansas and need not be reserved, but prudence requires the State to reiterate that nothing related to this contract shall be deemed a waiver of the Eleventh Amendment."

City of Wichita
City Council Meeting
September 13, 2011

TO: Mayor and City Council

SUBJECT: Repair or Removal of Dangerous & Unsafe Structures (Districts I and III)

INITIATED BY: Office of Central Inspection

AGENDA: New Business

Recommendations: Adopt the resolution.

Background: On July 26, 2011, a report was submitted with respect to the dangerous and unsafe conditions on the properties listed below. The Council adopted a resolution providing for a public hearing to be held on the condemnation actions at 9:30 a.m. or soon thereafter, on September 13, 2011.

Analysis: On July 11, 2011, the Board of Code Standards and Appeals held hearings on the seven (7) properties listed below.

Property Address	Council District
a. 1106 North Chautauqua	I
b. 342 North Pennsylvania	I
c. 437 North Grove	I
d. 1101 North New York	I
e. 1233 North Estelle	I
f. 1347 North Minnesota	I
g. 2200 East Pawnee (commercial building)	III

Detailed information/analyses concerning these properties are included in the attachments.

Financial Considerations: Structures condemned as dangerous buildings are demolished with funds from the Office of Central Inspection Special Revenue Fund contractual services budget, as approved annually by the City Council. This budget is supplemented by an annual allocation of federal Community Development Block Grant funds for demolition of structures located within the designated Neighborhood Reinvestment Area. Expenditures for dangerous building condemnation and demolition activities are tracked to ensure that City Council Resolution No. R-95-560, which limits OCI expenditures for non-revenue producing condemnation and housing code enforcement activities to 20% of OCI's total annual budgeted Special Revenue Fund expenditures, is followed. Owners of condemned structures demolished by the City are billed for the contractual costs of demolition, plus an additional $500 administrative fee. If the property owner fails to pay, these charges are recorded as a special property tax assessment against the property, which may be collected upon subsequent sale or transfer of the property.

Goal Impact: This agenda item impacts the goal indicator to Support a Dynamic Core Area and Vibrant Neighborhoods. Dangerous building condemnation actions, including demolitions, remove blighting and unsafe buildings that are detrimental to Wichita neighborhoods.

Legal Considerations: Pursuant to State Statute, the Resolutions were duly published twice on July 29, 2011 and August 5, 2011. A copy of each resolution was sent by certified mail or given personal service delivery to the owners and lien holders of record of the described property.

Recommendations/Actions: It is recommended that the City Council close the public hearing, adopt the resolutions declaring the buildings to be dangerous and unsafe structures, and accept the BCSA recommended actions to proceed with condemnation, allowing 10 days to start demolition and 10 days to complete removal of the structures. Any extensions of time granted to repair any structures would be contingent on the following: (1) All taxes have been paid to date as of September 13, 2011; (2) the structures have been secured as of September 13, 2011, and will continue to be kept secured; and (3) the premises are mowed and free of debris as of September 13, 2011, and will be so maintained during renovation.

If any of the above conditions are not met, the Office of Central Inspection will proceed with demolition action and also instruct the City Clerk to have the resolutions published once in the official city paper and advise the owner of these findings.

Attachments: Memorandums to Council, case summaries, and resolutions.

September 13, 2011
City Council Hearing
Removal of Dangerous Structures Case Summary

Address	Cncl. Dist.	Hsng. Case Age	Cndm. Init. Date	BCSA Hearing Date & Recommendation	Owner/ Rep. At BCSA ?	Open or Secure	Premise Cond. Status	Property Tax Status	Special Assessments	Pending Incurred Costs
1106 N. Volutsia	I	2 yrs. 1 mo.	01/10/11	03/07/11: 60 days 05/02/11: Defer to July 2011 hearing 07/11/11: 10/10	Yes Yes No	Secure	Maintained	Current	There is a 2011 special assessment for lot cleanup in the amount of $1,098.62, which includes interest.	On August 1, 2011, weed mowing in the amount of $120.00, which is pending assessment.
342 N. Pennsylvania	I	1 yr. 6 mos.	05/04/11	07/11/11: 10/10	No	The structure is unsecure with an open rear basement window.	Some tree debris.	The 2010 taxes are delinquent in the amount of $2,282.27, which includes specials and interest.	There is a 2010 special assessment for lot cleanup in the amount of $627.30 and 2010 special assessment for board-up in the amount of $567.35, both include interest. There is a 2011 special assessment for lot cleanup in the amount of $592.64.	None

September 13, 2011
City Council Hearing
Removal of Dangerous Structures Case Summary

Address	Cncl. Dist.	Hsng. Case Age	Cndm. Init. Date	BCSA Hearing Date & Recommendation	Owner/ Rep. At BCSA ?	Open or Secure	Premise Cond. Status	Property Tax Status	Special Assessments	Pending Incurred Costs
437 N. Grove	I	10 yrs. 11 mos.	05/04/11	07/11/11: 10/10	No	Secure	Tall grass and tree waste .	The 2010 taxes are delinquent in the amount of $945.95, which includes specials and interest.	There is a 2010 special assessment for lot cleanup in the amount of $651.70, which includes interest and 2010 special assessment for weed cutting in the amount of $124.21.	None

September 13, 2011
City Council Hearing
Removal of Dangerous Structures Case Summary

Address	Cncl. Dist.	Hsng. Case Age	Cndm. Init. Date	BCSA Hearing Date & Recommendation	Owner/ Rep. At BCSA ?	Open or Secure	Premise Cond. Status	Property Tax Status	Special Assessments	Pending Incurred Costs
1101 N. New York	I	3 yrs. 2 mos.	05/04/11	07/11/11: 10/10	No	The structure is unsecure with an open door and two open windows.	Miscellaneous debris and tall grass and weeds.	The 2007, 2008, 2009 and 2010 taxes are delinquent in the amount of $4,711.88, which includes specials and interest.	There is a 2010 special assessment for weed cutting in the amount of $124.23, 2011 special assessment for board-up in the amount of $116.17, 2011 special assessment for weed cutting in the amount of $253.36 and 2012 special assessment for board-up in the amount of $113.70.	On June 24, 2011, weed mowing in the amount of $120.00, which is pending assessment.

September 13, 2011
City Council Hearing
Removal of Dangerous Structures Case Summary

Address	Cncl. Dist.	Hsng. Case Age	Cndm. Init. Date	BCSA Hearing Date & Recommendation	Owner/ Rep. At BCSA ?	Open or Secure	Premise Cond. Status	Property Tax Status	Special Assessments	Pending Incurred Costs
1233 N. Estelle	I	3 yrs. 5 mos.	05/04/11	07/11/11: 10/10	No	The structure is unsecure with several broken north side windows and an open door.	Maintained	The 2008, 2009 and 2010 taxes are delinquent in the amount of $1,293.38, which include specials and interest.	There is a 2009 special assessment for emergency board-up in the amount of $114.32 and a 2010 special assessment for lot cleanup in the amount of $564.10, both include interest.	None
1347 N. Minnesota	I	3 yrs.	05/04/11	07/11/11: 10/10	No	The main structure is unsecure with an open north window and the accessory structure is unsecure with an open door.	Some scattered debris and tall grass and weeds.	Current	There are two 2011 special assessments. One is for weed cutting in the amount of $126.68 and the other is for board-up in the amount of $181.17, both include interest.	None
2200 E. Pawnee (commercial bldg)	III	6 mos.	05/04/11	07/11/11: 10/10	Yes	The structure is unsecure with collapsing walls and no roof.	Bulky waste	Current	None	None

DATE: August 25, 2011

CDM SUMMARY

COUNCIL DISTRICT # I

ADDRESS: 1106 N. CHAUTAUQUA

LEGAL DESCRIPTION: THE SOUTH HALF OF LOT 106 AND ALL OF LOT 108, CHAUTAUQUA AVENUE, FAIRMOUNT PARK ADDITION TO WICHITA, KANSAS, SEDGWICK COUNTY, KANSAS

DESCRIPTION OF STRUCTURE: A one story frame dwelling about 22 x 32 feet in size. Vacant and open, this structure has a severely shifting concrete block foundation; exposed, rotted sill plate; rotted and missing wood lap siding; dilapidated, rotted rear porch; rotted and missing wood trim and framing members; and the 8 x 8 foot metal accessory shed is deteriorated.

Description of dangerous or unsafe condition(s): The property is found to be dangerous and unsafe because of the following conditions:

A. Those, which have been damaged by fire, wind, want of repair, or other causes so as to have become dangerous to life, safety, morals or the general health and welfare of the occupants or the people of the city.

B. The structure fails to provide the necessities to decent living, which makes it, unfit for human habitation.

C. Those open to unauthorized persons or those permitted to be attractive to loiterers, vagrants, or children.

D. Those whose use, equipment or want of good housekeeping constitutes a decided fire or safety hazard to the property itself or its occupants or which presents a decided fire or safety hazards to surrounding property or a menace to the public safety and general welfare.

City Ordinance states that any one of the above categories is just cause to declare the building a public nuisance and shall be repaired or demolished.

_____ _____

Superintendent of Central Inspection Date
Enforcing Officer

DATE: August 25, 2011

BCSA GROUP # 1

ADDRESS: 1106 N. CHAUTAUQUA

ACTIVE FIELD FILE STARTED: August 11, 2009

NOTICE(S) ISSUED: Since August 11, 2009, a notice of improvement and several violation notices have been issued. In May 2007, an environmental case was initiated resulting in City of Wichita contractor abatement. In September 2009, a neighborhood nuisance enforcement case was initiated resulting in City of Wichita contractor abatement. In June 2008, July 2009, and June 2011, tall grass and weed cases were initiated all resulting in City of Wichita contractor abatements. On February 4, 2010, Central Inspection staff completed an emergency board-up on this property in the amount of $575.21. In April 2010, some repairs progressed resulting in a few violations being cleared.

PRE-CONDEMNATION LETTER: November 13, 2009

TAX INFORMATION: Current

COST ASSESSMENTS/DATES: There is a 2011 special assessment for lot cleanup in the amount of $1,098.62, which includes interest.

PREMISE CONDITIONS: Maintained

VACANT NEGLECTED BUILDING REPORT: A case was opened on September 21, 2010. The cased was closed on May 12, 2011, due to a new property owner un-boarding the structure.

NUISANCE ABATEMENT REPORT: Weed mowing on May 16, 2007, in the amount of $114.99, weed mowing on August 5, 2008, in the amount of $114.99, weed mowing on August 10, 2009, in the amount of $120.24 and lot cleanup on July 27, 2010, in the amount of $963.35. On August 1, 2011, weed mowing in the amount of $120.00, which is pending assessment.

POLICE REPORT: In the past five years there has been five reported police incidents at this location including burglary residence, possession illegal weapons, other traffic violation impounded auto, other traffic violation and miscellaneous report.

FORMAL CONDEMNATION ACTION INITIATED: January 10, 2011

RECENT DEVELOPMENTS: No repairs have been made and the structure is secure.

HISTORIC PRESERVATION REPORT: This property may be listed on the national, state and/or local registers as a designated historic resource or it may be within the prescribed environs of a state or national register listed property or historic district. As a result, this matter is being referred to the City's Historical Preservation Board for review to determine compliance with any applicable Federal, State, local law or regulations.

OWNER'S PAST CDM HISTORY: None

BOARD OF C.S.&A. RECOMMENDATION: At the March 7, 2011, BCSA hearing Joel Weihe, realtor, was present on behalf of this property.

Initiated in August of 2009, this case has had an improvement notice and several violation notices issued. In September 2009, a neighborhood nuisance enforcement case was abated by the City, and there have been at least two tall grass & weeds cases abated by the City. Central Inspection did an emergency board-up on the property on February 4, 2010, which cost $575.21. Some repairs were started in April of 2010, and some of the violations were resolved. A Pre-condemnation Letter was issued in 2009. The taxes are current. There is a 2011 Special Assessment for lot clean up in the amount $1,098.62. There is bulky waste and trash on the premise. A Vacant Neglected Building case is pending on this property. Formal Condemnation was initiated in January 2011. On February 18, 2011, Central Inspection staff was contacted by a new owner advising that he had purchased the property. During a site inspection by Central Inspection staff on February 24, 2011, it was noted that an individual was cleaning up the exterior of the property. Since that time, boards have been removed from the windows and the doors, and some repairs have been made on the south side of the foundation.

Mr. Weihe told the Board that his client had purchased the property at a tax auction the previous August. After having the foundation shored, Mr. Weihe's client then sold the property to another individual. The new owner had been working on the interior. Mr. Weihe assured the Board that he would advise the new owner to work on the exterior.

Board Member Banuelos made a motion to grant an additional sixty days for the new owner to repair the exterior, meanwhile maintaining the site in a clean and secure condition. Board Member Hartwell seconded the motion. The motion carried.

At the May 2, 2011, BCSA hearing Lonny Bedeski, owner, appeared on behalf of the property.

At the March 7, 2011, hearing, a motion was made and approved to allow sixty days for the new owner to repair the exterior, maintaining the site in a clean and secure condition. The taxes are current; there is a 2010 Special Assessment for emergency board-up in the amount of $594.18; a 2010 Special Assessment for weed mowing in the amount of $124.23; and a 2011 Special Assessment for lot clean-up in the amount of $1,098.62. At the last site visit, Central Inspection staff noted some tree limbs, tires, and construction debris on the premises. Some foundation work was in progress; however, no permit had been issued for the foundation work. The cellar entrance was open.

Mr. Bedeski explained that he had bought the property in February 2011, unaware that it was under consideration for condemnation at the time of the purchase. While he was working on the property, a Neighborhood Inspector stopped at the site and told him that the property had been submitted to the Board for consideration for condemnation. The foundation work had been started prior to his purchase of the property, Mr. Bedeski said.

Board Member Harder asked how much time Mr. Bedeski would need to get the exterior repairs completed. Mr. Bedeski said he estimated four months since he was uncertain as to the process for getting the necessary permits. Board Member Crotts made a motion to allow until the July meeting for Mr. Bedeski to make some progress on the repairs, formulate a plan of action, and reappear before the Board with an update, keeping the site in a clean and secure condition in the meantime. Board Member Willenberg seconded the motion. The motion was approved.

At the July 11, 2011 BCSA hearing, there was no representative present for this property.

Most recently before the Board at the May 2011 meeting, progress on the exterior repairs has ceased since that time. The taxes are current. There are special assessments against the property, including one for a 2010 board-up in the amount of $594.18.

Board Member Coonrod made a motion to refer the property to the City Council with a recommendation of condemnation, with ten days to initiate wrecking and ten days to finish the demolition. Board Member Harder seconded the motion. The motion passed.

STAFF RECOMMENDATION/REMARKS: Adopt the recommendation of the Board of Code Standards and Appeals. However, any extensions to repairs would be providing that all provisions of City Council Policy 33 are complied with. If any of these conditions are not met, staff is directed to proceed to let for bids to demolish the structure.

DATE: August 25, 2011

CDM SUMMARY

COUNCIL DISTRICT # I

ADDRESS: 342 N PENNSYLVANIA

LEGAL DESCRIPTION: LOT 41, ON PENNSYLVANIA AVENUE, MATHEWSON'S 4TH ADDITION TO WICHITA, SEDGWICK COUNTY, KANSAS

DESCRIPTION OF STRUCTURE: A two story frame dwelling about 50 x 28 feet in size. Vacant and open, this structure has been damaged by fire. It has a shifting and cracking block foundation, with missing blocks; rotted, missing and fire damaged wood lap siding; badly worn composition roof, with missing shingles and fire damage; fire damaged front porch; and fire damaged wood trim and framing members.

Description of dangerous or unsafe condition(s): The property is found to be dangerous and unsafe because of the following conditions:

A. Those, which have been damaged by fire, wind, want of repair, or other causes so as to have become dangerous to life, safety, morals or the general health and welfare of the occupants or the people of the city.

B. The structure fails to provide the necessities to decent living, which makes it, unfit for human habitation.

C. Those open to unauthorized persons or those permitted to be attractive to loiterers, vagrants, or children.

D. Those whose use, equipment or want of good housekeeping constitutes a decided fire or safety hazard to the property itself or its occupants or which presents a decided fire or safety hazards to surrounding property or a menace to the public safety and general welfare.

City Ordinance states that any one of the above categories is just cause to declare the building a public nuisance and shall be repaired or demolished.

_____ _____

Superintendent of Central Inspection Date
Enforcing Officer

DATE: August 25, 2011

BCSA GROUP # 3

ADDRESS: 342 N PENNSYLVANIA

ACTIVE FIELD FILE STARTED: March 3, 2010

NOTICE(S) ISSUED: Since March 3, 2010, two notice of improvements and several violation notices have been issued. In March 2010 and April 2011, neighborhood nuisance enforcement cases were initiated both resulted in City of Wichita contractor abatements. In March 2010, Central Inspection staff completed an emergency board-up on this property at a cost of $549.23

PRE-CONDEMNATION LETTER: April 18, 2011

TAX INFORMATION: The 2010 taxes are delinquent in the amount of $2,282.27, which includes specials and interest.

COST ASSESSMENTS/DATES: There is a 2010 special assessment for lot cleanup in the amount of $627.30 and 2010 special assessment for board-up in the amount of $567.35, both include interest. There is a 2011 special assessment for lot cleanup in the amount of $592.64.

PREMISE CONDITIONS: Some tree debris.

VACANT NEGLECTED BUILDING REPORT: None

NUISANCE ABATEMENT REPORT: Lot cleanup on April 27, 2010, in the amount of $545.70 and lot cleanup on July 21, 2011, in the amount of $592.64.

POLICE REPORT: In the past five years there has been nine reported police incidents at this location including battery domestic violence, arson dwelling, destruction to auto, other destruction to property, miscellaneous report (3) and larceny b auto accessories (2).

FORMAL CONDEMNATION ACTION INITIATED: May 4, 2011

RECENT DEVELOPMENTS: No repairs have been made. The structure is unsecure with an open rear basement window.

HISTORIC PRESERVATION REPORT: No impact

OWNER'S PAST CDM HISTORY: None

BOARD OF C.S.&A. RECOMMENDATION: At the July 11, 2011, BCSA hearing there was no party in attendance representing the property.

Board Member Harder made a motion to submit the property to the City Council, recommending condemnation with ten days to begin wrecking the structure and ten days to complete the removal. Board Member Banuelos seconded the motion. The motion carried without opposition.

STAFF RECOMMENDATION/REMARKS: Adopt the recommendation of the Board of Code Standards and Appeals. However, any extensions to repairs would be providing that all provisions of City Council Policy 33 are complied with. If any of these conditions are not met, staff is directed to proceed to let for bids to demolish the structure.

DATE: August 25, 2011

CDM SUMMARY

COUNCIL DISTRICT # I

ADDRESS: 437 N GROVE

LEGAL DESCRIPTION: LOTS 14 AND 15, ROACH'S SUBDIVISION, WICHITA, SEDGWICK COUNTY, KANSAS

DESCRIPTION OF STRUCTURE: A one story frame dwelling about 55 x 22 feet in size. Vacant for at least 3 years, this structure has shifting block basement walls; rotted and missing wood lap siding; badly worn composition roof, with missing shingles; dilapidated front and rear porches; and the roof rafters and wood trim are rotted.

Description of dangerous or unsafe condition(s): The property is found to be dangerous and unsafe because of the following conditions:

A. Those, which have been damaged by fire, wind, want of repair, or other causes so as to have become dangerous to life, safety, morals or the general health and welfare of the occupants or the people of the city.

B. The structure fails to provide the necessities to decent living, which makes it, unfit for human habitation.

C. Those whose use, equipment or want of good housekeeping constitutes a decided fire or safety hazard to the property itself or its occupants or which presents a decided fire or safety hazards to surrounding property or a menace to the public safety and general welfare.

City Ordinance states that any one of the above categories is just cause to declare the building a public nuisance and shall be repaired or demolished.

_____ _____

Superintendent of Central Inspection Date
Enforcing Officer

DATE: August 25, 2011

BCSA GROUP # 3

ADDRESS: 437 N GROVE

ACTIVE FIELD FILE STARTED: September 20, 2000

NOTICE(S) ISSUED: Since September 20, 2000, numerous notice of improvements and violation notices have been issued. In November 2005 and August 2006, environmental cases were initiated on this property resulting in City of Wichita contractor abatements. In August 2005 and June 2006, environmental cases were initiated resulting in owner compliance. In May 2009, a neighborhood nuisance enforcement case was initiated resulting in City of Wichita contractor abatement. In May 2008 and April 2011, neighborhood nuisance enforcement cases initiated resulting in owner compliance. In August 2008, October 2008 and September 2009, tall grass and weeds cases were initiated resulting in City of Wichita contractor abatements. In May 2009 and June 2010, tall grass and weeds cases were initiated resulting in owner compliance. It should be noted that uniform criminal complaints have been issue regarding this property and it has been the subject of neighborhood court. On January 14, 2011, Central Inspection Building Inspector was onsite and noted that the job was not started and appeared that the permit was insufficient for the type of work to be completed. On July 12, 2011, a neighborhood nuisance enforcement case was initiated and remains open.

PRE-CONDEMNATION LETTER: April 22, 2011

TAX INFORMATION: The 2010 taxes are delinquent in the amount of $945.95, which includes specials and interest.

COST ASSESSMENTS/DATES: There is a 2010 special assessment for lot cleanup in the amount of $651.70, which includes interest and 2010 special assessment for weed cutting in the amount of $124.21.

PREMISE CONDITIONS: Tall grass and tree waste .

VACANT NEGLECTED BUILDING REPORT: Open case

NUISANCE ABATEMENT REPORT: Weed mowing on October 20, 2008, in the amount of $120.24, lot cleanup on July 23, 2009, in the amount of $524.75 and weed mowing on September 30, 2009, in the amount of $120.24.

POLICE REPORT: There have been no reported police incidents at this location within the last five years.

FORMAL CONDEMNATION ACTION INITIATED: May 4, 2011

RECENT DEVELOPMENTS: No repairs have been made and the structure is secure.

HISTORIC PRESERVATION REPORT: This property may be listed on the national, state and/or local registers as a designated historic resource or it may be within the prescribed environs of a state or national register listed property or historic district. As a result, this matter is being referred to the City's Historical Preservation Board for review to determine compliance with any applicable Federal, State, local law or regulations.

OWNER'S PAST CDM HISTORY: None

BOARD OF C.S.&A. RECOMMENDATION: At the July 11, 2011, BCSA hearing no one attended the hearing on behalf of this property.

Board Member Youle made a motion to refer the property to the City Council with a recommendation of condemnation, with ten days to initiate demolition and ten days to finish razing the structure. Board Member Harder seconded the motion. The motion was approved.

STAFF RECOMMENDATION/REMARKS: Adopt the recommendation of the Board of Code Standards and Appeals. However, any extensions to repairs would be providing that all provisions of City Council Policy 33 are complied with. If any of these conditions are not met, staff is directed to proceed to let for bids to demolish the structure.

DATE: August 25, 2011

CDM SUMMARY

COUNCIL DISTRICT # I

ADDRESS: 1101 N NEW YORK

LEGAL DESCRIPTION: LOTS 48, 50, 52 AND 54 ON GETTO AVENUE, NOW NEW YORK AVENUE, GETTO'S ADDITION TO WICHITA, SEDGWICK COUNTY, KANSAS

DESCRIPTION OF STRUCTURE: A two story frame dwelling about 25 x 30 feet in size. Vacant for at least 3 years, this structure has a shifting and cracking concrete foundation; badly worn composition roof, with holes; and deteriorated, rotted front porch and steps.

Description of dangerous or unsafe condition(s): The property is found to be dangerous and unsafe because of the following conditions:

A. Those, which have been damaged by fire, wind, want of repair, or other causes so as to have become dangerous to life, safety, morals or the general health and welfare of the occupants or the people of the city.

B. The structure fails to provide the necessities to decent living, which makes it, unfit for human habitation.

C. Those whose use, equipment or want of good housekeeping constitutes a decided fire or safety hazard to the property itself or its occupants or which presents a decided fire or safety hazards to surrounding property or a menace to the public safety and general welfare.

City Ordinance states that any one of the above categories is just cause to declare the building a public nuisance and shall be repaired or demolished.

_____ _____

Superintendent of Central Inspection Date
Enforcing Officer

DATE: August 25, 2011

BCSA GROUP # 3

ADDRESS: 1101 N NEW YORK

ACTIVE FIELD FILE STARTED: June 20, 2008

NOTICE(S) ISSUED: Since June 20, 2008, a notice of improvement and numerous violation notices have been issued. In August 2007 and March 2008, environmental cases were initiated resulting in City of Wichita contractor abatements. In November 2008, a neighborhood nuisance case was initiated resulting in City of Wichita contractor abatement. In October 2008, June 2009, June 2010, August 2010 and May 2011, tall grass and weeds cases were initiated resulting in City of Wichita contractor abatements. Central Inspection staff has completed six emergency board-ups on this property, which include: July 12, 2008, at a cost of $259.10; November 30, 2008, at a cost of $107.58; December 6, 2008, at a cost of $139.58; January 17, 2009, at a cost of $174.27; November 9, 2010, at a cost of $112.79 and June 23, 2011, at a cost of $113.50. On August 18, 2011, a tall grass and weeds case was initiated and remains open.

PRE-CONDEMNATION LETTER: November 12, 2010

TAX INFORMATION: The 2007, 2008, 2009 and 2010 taxes are delinquent in the amount of $4,711.88, which includes specials and interest.

COST ASSESSMENTS/DATES: There is a 2010 special assessment for weed cutting in the amount of $124.23, 2011 special assessment for board-up in the amount of $116.17, 2011 special assessment for weed cutting in the amount of $253.36 and 2012 special assessment for board-up in the amount of $113.70.

PREMISE CONDITIONS: Miscellaneous debris and tall grass and weeds.

VACANT NEGLECTED BUILDING REPORT: Open case

NUISANCE ABATEMENT REPORT: Weed mowing on September 13, 2007, in the amount of $114.99, lot cleanup on August 7, 2008, in the amount of $1,159.30, weed mowing on October 30, 2008, in the amount of $120.24, lot cleanup on February 3, 2009, in the amount of $1,005.32, weed mowing on July 28, 2009, in the amount of $120.24, weed mowing June 24, 2010, in the amount of $123.00, weed mowing September 13, 2010, in the amount of $123.00. On June 24, 2011, weed mowing in the amount of $120.00, which is pending assessment.

POLICE REPORT: There have been no reported police incidents at this location within the last five years.

FORMAL CONDEMNATION ACTION INITIATED: May 4, 2011

RECENT DEVELOPMENTS: No repairs have been made. The structure is unsecure with an open door and two open windows. It should be noted that on June 27, 2011, OCI staff was contacted by the estate attorney's secretary. She indicated the heirs never probated and had no interest in the property due the condition of it. The heirs were concerned that they would be responsible for paying for the condemnation. Staff informed her of the process regarding billing and special assessment submission.

HISTORIC PRESERVATION REPORT: This property may be listed on the national, state and/or local registers as a designated historic resource or it may be within the prescribed environs of a state or national register listed property or historic district. As a result, this matter is being referred to the City's Historical Preservation Board for review to determine compliance with any applicable Federal, State, local law or regulations.

OWNER'S PAST CDM HISTORY: None

BOARD OF C.S.&A. RECOMMENDATION: At the July 11, 2011, BCSA no one attended the hearing on behalf of this property.

Board Member Youle made a motion to refer the property to the City Council with a recommendation of condemnation, with ten days to initiate demolition and ten days to finish razing the structure. Board Member Harder seconded the motion. The motion was approved.

STAFF RECOMMENDATION/REMARKS: Adopt the recommendation of the Board of Code Standards and Appeals. However, any extensions to repairs would be providing that all provisions of City Council Policy 33 are complied with. If any of these conditions are not met, staff is directed to proceed to let for bids to demolish the structure.

DATE: August 25, 2011

CDM SUMMARY

COUNCIL DISTRICT # I

ADDRESS: 1233 N ESTELLE

LEGAL DESCRIPTION: LOTS 69 AND 71, ON MABEL, NOW ESTELLE AVENUE, FAIRMOUNT PARK ADDITION TO WICHITA, SEDGWICK COUNTY, KANSAS

DESCRIPTION OF STRUCTURE: A one story frame dwelling about 28 x 35 feet in size. Vacant and open, this structure has shifting and cracking basement walls; badly cracked and shifting block walls; rotted wood siding; badly worn composition roof; and rotted soffit, fascia, wood trim and framing members.

Description of dangerous or unsafe condition(s): The property is found to be dangerous and unsafe because of the following conditions:

A. Those, which have been damaged by fire, wind, want of repair, or other causes so as to have become dangerous to life, safety, morals or the general health and welfare of the occupants or the people of the city.

B. The structure fails to provide the necessities to decent living, which makes it, unfit for human habitation.

C. Those open to unauthorized persons or those permitted to be attractive to loiterers, vagrants, or children.

D. Those whose use, equipment or want of good housekeeping constitutes a decided fire or safety hazard to the property itself or its occupants or which presents a decided fire or safety hazards to surrounding property or a menace to the public safety and general welfare.

City Ordinance states that any one of the above categories is just cause to declare the building a public nuisance and shall be repaired or demolished.

_____ _____

Superintendent of Central Inspection Date
Enforcing Officer

DATE: August 25, 2011

BCSA GROUP # 3

ADDRESS: 1233 N ESTELLE

ACTIVE FIELD FILE STARTED: March 21, 2008

NOTICE(S) ISSUED: Since March 21, 2008, two notice of improvements and numerous violation notices have been issued. In March 2008, an environmental case was initiated resulting in owner compliance. In April 2009, a neighborhood nuisance enforcement case was initiated resulting in City of Wichita contractor abatement. On April 23, 2009, Central Inspection staff completed and emergency board-up on this property at a cost of $106.55. On September 16, 2010, an emergency board-up case was initiated resulting in owner compliance. On August 12, 2011, an emergency board-up case was initiated and remains open.

PRE-CONDEMNATION LETTER: September 29, 2010

TAX INFORMATION: The 2008, 2009 and 2010 taxes are delinquent in the amount of $1,293.38, which include specials and interest.

COST ASSESSMENTS/DATES: There is a 2009 special assessment for emergency board-up in the amount of $114.32 and a 2010 special assessment for lot cleanup in the amount of $564.10, both include interest.

PREMISE CONDITIONS: Maintained

VACANT NEGLECTED BUILDING REPORT: Open case

NUISANCE ABATEMENT REPORT: Lot cleanup on June 26, 2009, in the amount of $490.00.

POLICE REPORT: There have been no reported police incidents at this location within the last five years.

FORMAL CONDEMNATION ACTION INITIATED: May 4, 2011

RECENT DEVELOPMENTS: No repairs have been made. The structure is unsecure with several broken north side windows and an open door.

HISTORIC PRESERVATION REPORT: No impact

OWNER'S PAST CDM HISTORY: This owner previously had one property in condemnation. That property was demolished by City of Wichita contractor.

BOARD OF C.S.&A. RECOMMENDATION: At the July 11, 2011, BCSA hearing there was no one present on behalf of this property.

Vacant and open, this one-story frame dwelling is approximately 28 x 35 feet in size. This structure has shifting and cracking basement walls; badly cracked and shifting block walls; rotted wood siding; badly worn composition roof; and rotted soffit, fascia, wood trim and framing members.

Board Member Coonrod made a motion to refer the property to the City Council, recommending condemnation, with ten days to begin removal of the structure and ten days to complete the demolition. Board Member Youle seconded the motion. The motion was approved.

STAFF RECOMMENDATION/REMARKS: Adopt the recommendation of the Board of Code Standards and Appeals. However, any extensions to repairs would be providing that all provisions of City Council Policy 33 are complied with. If any of these conditions are not met, staff is directed to proceed to let for bids to demolish the structure.

DATE: August 25, 2011

CDM SUMMARY

COUNCIL DISTRICT # I

ADDRESS: 1347 N MINNESOTA

LEGAL DESCRIPTION: LOTS 118 AND 119, ROSENTHAL'S 2ND ADDITION TO THE CITY OF WICHITA, SEDGWICK COUNTY, KANSAS

DESCRIPTION OF STRUCTURE: A one story frame dwelling about 50 x 40 feet in size. Vacant and open, this structure has a shifting and cracking limestone foundation; missing veneer; missing siding shingles; badly worn composition roof; rotted soffits, fascia and window trim; and the 10 x 4 foot wood accessory structure is deteriorated.

Description of dangerous or unsafe condition(s): The property is found to be dangerous and unsafe because of the following conditions:

A. Those, which have been damaged by fire, wind, want of repair, or other causes so as to have become dangerous to life, safety, morals or the general health and welfare of the occupants or the people of the city.

B. The structure fails to provide the necessities to decent living, which makes it, unfit for human habitation.

C. Those open to unauthorized persons or those permitted to be attractive to loiterers, vagrants, or children.

D. Those whose use, equipment or want of good housekeeping constitutes a decided fire or safety hazard to the property itself or its occupants or which presents a decided fire or safety hazards to surrounding property or a menace to the public safety and general welfare.

City Ordinance states that any one of the above categories is just cause to declare the building a public nuisance and shall be repaired or demolished.

_____ _____

Superintendent of Central Inspection Date
Enforcing Officer

DATE: August 25, 2011

BCSA GROUP # 3

ADDRESS: 1347 N MINNESOTA

ACTIVE FIELD FILE STARTED: August 22, 2008

NOTICE(S) ISSUED: Since August 22, 2008, numerous notice of improvements and violation notices have been issued. In August 2008, a neighborhood nuisance enforcement case was initiated resulting in owner compliance. In September 2009, a tall grass and weeds case was initiated resulting in owner compliance. In June 2010, a tall grass and weeds case was initiated resulting in City of Wichita contractor abatement. On April 18, 2011, Central Inspection staff completed an emergency board-up on this property at a cost of $174.89.

PRE-CONDEMNATION LETTER: February 9, 2011

TAX INFORMATION: Current

COST ASSESSMENTS/DATES: There are two 2011 special assessments. One is for weed cutting in the amount of $126.68 and the other is for board-up in the amount of $181.17, both include interest.

PREMISE CONDITIONS: Some scattered debris and tall grass and weeds.

VACANT NEGLECTED BUILDING REPORT: Open case

NUISANCE ABATEMENT REPORT: Weed mowing on September 15, 2010, in the amount of $123.00.

POLICE REPORT: There have been no reported police incidents at this location within the last five years.

FORMAL CONDEMNATION ACTION INITIATED: May 4, 2011

RECENT DEVELOPMENTS: No repairs have been made. The main structure is unsecure with an open north window and the accessory structure is unsecure with an open door. On July 7, 2011, OCI staff was contacted by Attorney Sarah Newell. She informed staff that she represented Sondra Nelson in a 2006 bankruptcy regarding this property. She advised the motion was made to return the property to the mortgage company Dovenmuehle. She advised that foreclosure has not been filed.

HISTORIC PRESERVATION REPORT: No impact

OWNER'S PAST CDM HISTORY: None

BOARD OF C.S.&A. RECOMMENDATION: At the July 11, 2011, BCSA hearing there was no one attending the meeting as a representative of this property.

Board Member Youle made a motion to present the property to the City Council with a recommendation of condemnation, with ten days to start wrecking the building and ten days to

complete the removal. Board Member Willenberg seconded the motion. The motion carried.

STAFF RECOMMENDATION/REMARKS: Adopt the recommendation of the Board of Code Standards and Appeals. However, any extensions to repairs would be providing that all provisions of City Council Policy 33 are complied with. If any of these conditions are not met, staff is directed to proceed to let for bids to demolish the structure.

DATE: August 25, 2011

CDM SUMMARY

COUNCIL DISTRICT # III

ADDRESS: 2200 E PAWNEE (commercial building)

LEGAL DESCRIPTION: LOT 1, BLOCK 1, ADCOCK ADDITION TO WICHITA, SEDGWICK COUNTY, KANSAS

DESCRIPTION OF STRUCTURE: A one story commercial building about 20 x 30 feet in size. Vacant and open this structure has been badly damaged by fire. It has collapsed block walls and missing roof; fire damaged wood triim; and the interior has been destroyed by fire.

Description of dangerous or unsafe condition(s): The property is found to be dangerous and unsafe because of the following conditions:

A. Those, which have been damaged by fire, wind, want of repair, or other causes so as to have become dangerous to life, safety, morals or the general health and welfare of the occupants or the people of the city.

B. Those which show thirty-three percent or more of damage or deterioration of the supporting members or fifty percent or more of damage or deterioration of the non-supporting enclosing or outside walls or covering.

C. Those, which have become or are so dilapidated, decayed, unsafe, unsanitary or which so utterly fail to provide the habitation, or are likely to cause sickness or disease, so as to work injury to the health, morals, safety or general welfare of those living therein.

D. Those having light, air, and sanitation facilities which are inadequate to protect the health, safety or general welfare of human beings who live or may live therein.

City Ordinance states that any one of the above categories is just cause to declare the building a public nuisance and shall be repaired or demolished.

_____ _____

Superintendent of Central Inspection Date
Enforcing Officer

DATE: August 25, 2011

BCSA GROUP # 3

ADDRESS: 2200 E PAWNEE (commercial building)

ACTIVE FIELD FILE STARTED: March 4, 2011

NOTICE(S) ISSUED: Since March 4, 2011, a notice of violation has been issued. In July 2003, June 2005, March 2006 and September 2009, environmental cases were initiated resulting in owner compliance. In August 2009, a neighborhood nuisance case was initiated resulting in owner compliance.

PRE-CONDEMNATION LETTER: March 4, 2011

TAX INFORMATION: Current

COST ASSESSMENTS/DATES: None

PREMISE CONDITIONS: Bulky waste

VACANT NEGLECTED BUILDING REPORT: None

NUISANCE ABATEMENT REPORT: None

POLICE REPORT: In the past five years there have been thirteen reported police incidents at this location including battery domestic violence, other traffic violation impounded auto, revocation suspended drivers license, auto license violation, destruction of property domestic violence, other destruction of property, miscellaneous report, (3) non-injury accident under $1000 and (3) motor vehicle in transport.

FORMAL CONDEMNATION ACTION INITIATED: May 4, 2011

RECENT DEVELOPMENTS: No repairs have been made. The structure is unsecure with collapsing walls and no roof.

HISTORIC PRESERVATION REPORT: No impact

OWNER'S PAST CDM HISTORY: None

BOARD OF C.S.&A. RECOMMENDATION: At the July 11, 2011 BCSA hearing the property owner, Mr. Dale Hancock, was present.

The original file was initiated on this property on March 4, 2011, and a Notice of Violation was sent at that time. The taxes are current, and there are no Special Assessments against the property. There is bulky waste on the premise.

Board Member Hartwell asked Mr. Hancock what he planned to do with the building. Mr. Hancock said he had been working every day to get his inventory out of the damaged building and sorted for recycling. He added that it was his opinion that the walls of the structure were sound.

Board Member Willenberg made a motion to refer the property to the City Council with a recommendation of condemnation with ten days to begin demolition and ten days to complete the demolition.

Board Member Crotts asked when the fire damaged the property. Mr. Hancock replied that the fire occurred on November 19, 2010.

Board Member Crotts seconded the motion. The motion carried.

Mr. Schroeder explained the procedure regarding the Board's referral of the property to the City Council. A letter will be sent to Mr. Hancock advising him of the date that the property will be presented to the City Council. At that time, the Council will review the progress made on the site and make a determination.

STAFF RECOMMENDATION/REMARKS: Adopt the recommendation of the Board of Code Standards and Appeals. However, any extensions to repairs would be providing that all provisions of City Council Policy 33 are complied with. If any of these conditions are not met, staff is directed to proceed to let for bids to demolish the structure.

Agenda Item No. II-8

City of Wichita
City Council Meeting
September 13, 2011

TO: Mayor and City Council

SUBJECT: Public Hearing and Issuance of Hospital Facilities Improvement and Refunding Revenue Bonds (Via Christi Health System, Inc.) (Districts II, III and VI)

INITIATED BY: Office of Urban Development

AGENDA: New Business

Recommendation: Close the public hearing and place the ordinance on first reading.

Background: On August 16, 2011, the City Council approval of a Letter of Intent to issue Hospitals Facilities Improvements and Refunding Revenue Bonds for Via Christi Health System, Inc. in an amount not-to-exceed $200 million. The proceeds of the proposed Bonds will be used to refinance outstanding Hospital Facilities Improvements and Refunding Revenue Bonds, issued in 2001 to refinance improvements to hospital facilities located at 929 N. St. Francis and 3600 E. Harry and in Pittsburg, Kansas and to finance additional improvements and equipment acquisition for all three facilities ("Project"). Via Christi requests the issuance of the Bonds at this time.

Analysis: Bond proceeds will be used in part to refund all outstanding bonds issued by the City as its Series III A and B 2001 Hospital Facilities Improvement and Refunding Revenue Bonds. The 2001 Bonds are currently redeemable at a price equal to 101% of the principal amount of bonds being redeemed, plus accrued interest to the date of redemption. In addition, the bond proceeds will be used to finance construction of renovations and additions at Via Christi's St. Francis and St. Joseph campuses in Wichita and at its hospital in Pittsburg, Kansas. An analysis of the uses of project funds is:

USES OF FUNDS

Redemption of the 2001 Refunded Bonds	165,465,000
Construction of the Project	27,400,708
Furnishings, Machinery & Equipment	5,485,000
Cost of Issuance	1,649,292
Total Cost of Project:	$200,000,000

Financial Considerations: Via Christi agrees to pay all costs of issuing the bonds and agrees to pay the City's $2,500 annual IRB administrative fee for the term of the bonds. The investment firm of Morgan Stanley will serve as underwriter of the bonds.

Goal Impact: Economic Vitality and Affordable Living. Providing tax-exempt financing to not-for-profit health care providers ensures continued high-quality care for residents and visitors and provides opportunities for high-quality job creation.

Legal Considerations: The law firm of Triplett, Woolf & Garretson, LLC serves as bond counsel in the transaction and has prepared the bond documents. The City Attorney's Office will review and approve the form of bond documents prior to the issuance of any bonds.

Recommendations/Actions: It is recommended that the City Council close the public hearing and approve first reading of the Bond Ordinance authorizing the execution and delivery of documents for the issuance of Hospital Facilities Refunding and Improvement Revenue Bonds for Via Christi Health Systems in the amount not to exceed $200,000,000 and approve the necessary signatures; approve the form of the Bond Purchase Agreements and authorize the Mayor to sign once the pricing process has been completed; and authorize staff to apply to the Kansas Department of Revenue for a sales tax exemption.

Attachments: Bond Ordinance

Agenda Item No. IV-08

City of Wichita
City Council Meeting
September 13, 2011

TO: Mayor and City Council

SUBJECT: Public Hearing and Issuance of Hospital Facilities Improvement and Refunding Revenue Bonds (Via Christi Health System, Inc.) (Districts II, III and VI)

INITIATED BY: Office of Urban Development

AGENDA: New Business

Recommendation: Close the public hearing and place the ordinance on first reading.

Background: On August 16, 2011, the City Council approval of a Letter of Intent to issue Hospitals Facilities Improvements and Refunding Revenue Bonds for Via Christi Health System, Inc. in an amount not-to-exceed $200 million. The proceeds of the proposed Bonds will be used to refinance outstanding Hospital Facilities Improvements and Refunding Revenue Bonds, issued in 2001 to refinance improvements to hospital facilities located at 929 N. St. Francis and 3600 E. Harry and in Pittsburg, Kansas and to finance additional improvements and equipment acquisition for all three facilities ("Project"). Via Christi requests the issuance of the Bonds at this time.

Analysis: Bond proceeds will be used in part to refund all outstanding bonds issued by the City as its Series III A and B 2001 Hospital Facilities Improvement and Refunding Revenue Bonds. The 2001 Bonds are currently redeemable at a price equal to 101% of the principal amount of bonds being redeemed, plus accrued interest to the date of redemption. In addition, the bond proceeds will be used to finance construction of renovations and additions at Via Christi's St. Francis and St. Joseph campuses in Wichita and at its hospital in Pittsburg, Kansas. An analysis of the uses of project funds is:

USES OF FUNDS

Redemption of the 2001 Refunded Bonds	165,465,000
Construction of the Project	27,400,708
Furnishings, Machinery & Equipment	5,485,000
Cost of Issuance	1,649,292
Total Cost of Project:	$200,000,000

Financial Considerations: Via Christi agrees to pay all costs of issuing the bonds and agrees to pay the City's $2,500 annual IRB administrative fee for the term of the bonds. The investment firm of Morgan Stanley will serve as underwriter of the bonds.

Goal Impact: Economic Vitality and Affordable Living. Providing tax-exempt financing to not-for-profit health care providers ensures continued high-quality care for residents and visitors and provides opportunities for high-quality job creation.

Legal Considerations: The law firm of Triplett, Woolf & Garretson, LLC serves as bond counsel in the transaction and has prepared the bond documents. The City Attorney's Office will review and approve the form of bond documents prior to the issuance of any bonds.

Recommendations/Actions: It is recommended that the City Council close the public hearing and approve first reading of the Bond Ordinance authorizing the execution and delivery of documents for the issuance of Hospital Facilities Refunding and Improvement Revenue Bonds for Via Christi Health Systems in the amount not to exceed $200,000,000 and approve the necessary signatures; approve the form of the Bond Purchase Agreements and authorize the Mayor to sign once the pricing process has been completed; and authorize staff to apply to the Kansas Department of Revenue for a sales tax exemption.

Attachments: Bond Ordinance

Agenda Item No. V-1

City of Wichita
City Council Meeting
September 13, 2011

TO: Mayor and City Council

SUBJECT: ZON2011-00021 – City zone change from SF-5 Single-Family Residential to TF-3 Two-Family Residential; generally located on the west side of Hoover Street, Southwest of the terminus of 9th Street North. (District VI)

INITIATED BY: Metropolitan Area Planning Department

AGENDA: Planning (Non-Consent)

MAPC Recommendation: The MAPC recommendation was to approve the request (8-1).

MAPD Staff Recommendation: The MAPD staff recommendation was to approve the request.

DAB Recommendation: The District VI Advisory Board recommendation was to approve the request (4-2).

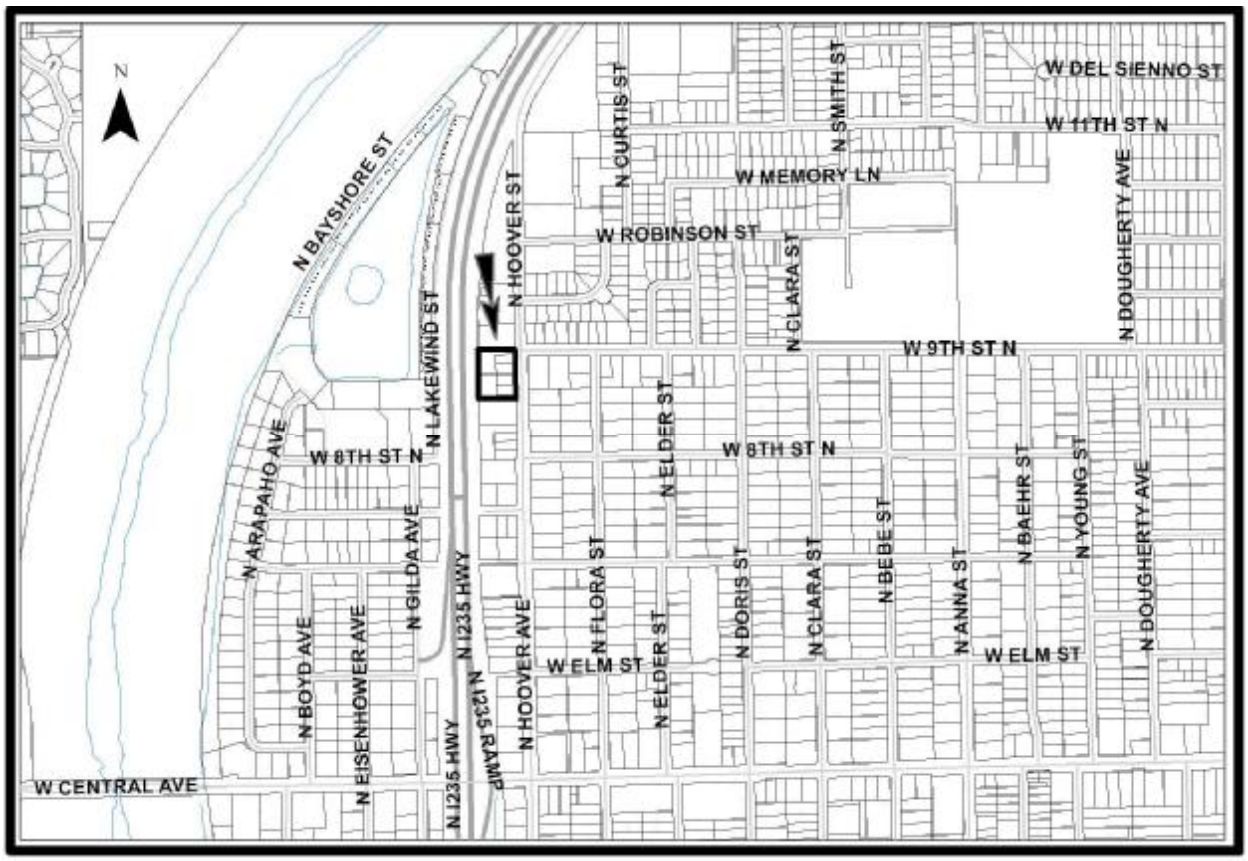

BACKGROUND: The applicant is requesting a zone change to TF-3 Two-Family Residential ("TF-3") for about 1.52 acres of land currently zoned SF-5 Single-Family Residential ("SF-5"). The property is located on the west side of a paved section of Hoover Street, to the southwest of the terminus of 9th Street North at Hoover. The rear of the property abuts the I-235 right-of-way.

Two zoning cases in the vicinity have requested TF-3 zoning. The one closest to this site was located one tract to the south. It was denied and subsequently developed with single-family units. The other request was located at 9th Street North and Robinson, which is one block north and almost one block east on Robinson Street. This request was approved in 2010. With TF-3 zoning, no additional requirements for compatibility setbacks, screening and landscaping are triggered unless the site is to be developed with institutional uses (such as a church) instead of duplex dwellings.

Development along Hoover Street in the four blocks north of Central to 9th Street North consists almost exclusively of single-family residences, except for some duplexes a block north of Central and the two duplexes on the northeast corner of Hoover Street and 9th Street North, situated diagonally across Hoover from this request and located on property zoned MF-29 Multi-Family Residential ("MF-29"). The application area is flanked by two unplatted tracts zoned SF-5 and developed with single-family residences. The next tract to the north is a millwork shop on property zoned LI Limited Industrial ("LI"). I-235 separates the site from DP-70 Sandpiper Bay (a/k/a Miles Lakewood Village) Community Unit Plan. Sandpiper Bay is developed with a row of townhouses (condominiums) ringing Sandpiper Bay, on property zoned MF-18 Multi-Family Residential ("MF-18"), and a nursing facility on property zoned B Multi-Family Residential ("B").

Analysis: At the MAPC meeting held July 21, 2011, the MAPC voted (8-1) to approve the request for the zone change from SF-5 to TF-3. A neighbor spoke in opposition at the meeting, citing the negative effect on her property. A protest petition was presented from property owners in the vicinity. At the District VI Advisory Board held July 20, 2011, the DAB voted (4-2) to recommend approval of the requested change. Neighbors expressed opposition at the DAB meeting based on the increased traffic and the difficulty of enforcing community standards related to maintenance and upkeep of property. Correspondence was received from the Orchard Park Neighborhood Association stating the Orchard Park Association voted (unanimously) to recommend the request be denied due to the presence of many rental properties in the area and the lack of upkeep on the rental properties. A total of 55.49 percent of the property within 200 feet of the zone change protested the requested change. This will require a three-fourth majority vote of the Wichita City Council to approve the request.

Financial Considerations: There are no financial considerations in regards to the zoning request.

Goal Impact: The impact of the zone change would be to promote economic vitality.

Legal Considerations: The ordinance has been reviewed and approved as to form by the Law Department.

Recommendation/Actions:
1) Adopt the findings of the MAPC and approve the zone change and authorize the Mayor to sign the ordinance (three-fourth majority vote required to override the protest petition); 2) deny the case (an override of the Planning Commission's recommendation requires two-third majority vote of the City Council on the first hearing) or 3) return the case to MAPC for reconsideration (requires simple majority vote).

Attachments:
- Ordinance
- Protest Map
- DAB VI Memo

- MAPC Minutes
- Correspondence from Debbie Sigman, Orchard Park

OCA 150004

ORDINANCE NO. 49-086

AN ORDINANCE CHANGING THE ZONING CLASSIFICATIONS OR DISTRICTS OF CERTAIN LANDS LOCATED IN THE CITY OF WICHITA, KANSAS, UNDER THE AUTHORITY GRANTED BY THE WICHITA-SEDGWICK COUNTY UNIFIED ZONING CODE, SECTION V-C, AS ADOPTED BY SECTION 28.04.010, AS AMENDED.

BE IT ORDAINED BY THE GOVERNING BODY
OF THE CITY OF WICHITA, KANSAS.

SECTION 1. That having received a recommendation from the Planning Commission, and proper notice having been given and hearing held as provided by law and under authority and subject to the provisions of The Wichita-Sedgwick County Unified Zoning Code, Section V-C, as adopted by Section 28.04.010, as amended, the zoning classification or districts of the lands legally described hereby are changed as follows:

Case No. ZON2011-00021

Zone change from SF-5 Single-Family Residential ("SF-5") to TF-3 Two-Family Residential ("TF-3") on a 1.52-acre property described as:

Lots 1, 2, 3, 4, 5 and 6, Block 1, Armstrong Estates Addition to Wichita, Sedgwick County, Kansas, generally located on the west die of Hoover Street, southwest of the terminus of 9th Street North.

SECTION 2. That upon the taking effect of this ordinance, the above zoning changes shall be entered and shown on the "Official Zoning Map" previously adopted by reference, and said official zoning map is hereby reincorporated as a part of the Wichita -Sedgwick County Unified Zoning Code as amended.

SECTION 3. That this Ordinance shall take effect and be in force from and after its adoption and publication in the official City paper.

_____
Carl Brewer - Mayor

ATTEST:

_____
Karen Sublett, City Clerk

(SEAL)

Approved as to form: _____
Gary E. Rebenstorf, City Attorney

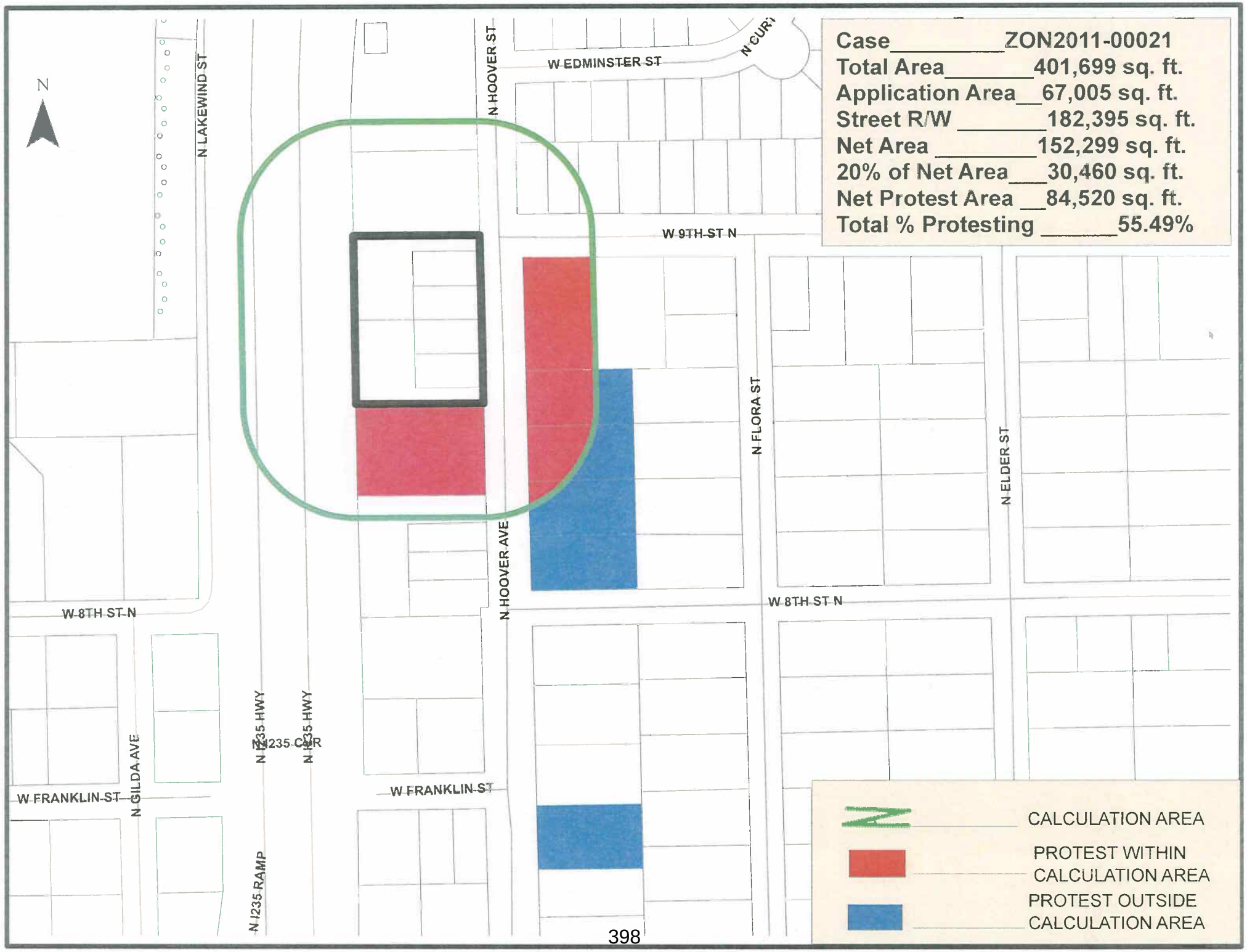
Case ZON2011-00021
Total Area 401,699 sq. ft.
Application Area 67,005 sq. ft.
Street R/W 182,395 sq. ft.
Net Area 152,299 sq. ft.
20% of Net Area 30,460 sq. ft.
Net Protest Area 84,520 sq. ft.
Total % Protesting 55.49%
N
N LAKEWIND ST
N HOOVER ST
W EDMINSTER ST
N CURI
W 9TH ST N
N FLORA ST
N ELDER ST
N HOOVER AVE
W 8TH ST N
W 8TH ST N
N I235 HWY
N I235 HWY
N I235 CNR
N GILDA AVE
W FRANKLIN ST
W FRANKLIN ST
N I235 RAMP
CALCULATION AREA
PROTEST WITHIN CALCULATION AREA
PROTEST OUTSIDE CALCULATION AREA

CITY OF WICHITA

INTEROFFICE MEMORANDUM

TO: MAPC Members

FROM: Terri Dozal, Neighborhood Assistant, District VI

SUBJECT: **ZON2011-00021**
City Zone Change from SF-5 Single-Family Residential to TF-3 Two-Family Residential, generally located southwest of the intersection of 9th Street North with Hoover Road and east of I-235.

DATE: July 21, 2011

On Wednesday, July 20, 2011 the District VI Advisory Board (DAB) considered a City Zone Change from SF-5 Single-Family Residential to TF-3 Two-Family Residential, generally located southwest of the intersection of 9th Street North with Hoover Road and east of I-235.

The members were provided the MAPD staff report for review prior to the meeting. *Derek Slocum,* Planner presented the case background, reviewed the staff recommendation and answered questions of members and the public.

The Board asked/made the following questions/comments:

- Was there an application sign posted?
- Was there ever prior development to this property?
- Does the applicant own other properties in this neighborhood?
- Who will maintain these properties?
- Where will the extra parking be located?
- What would the maximum density of this area be if allowed?

Kathy Aguilar, 915 N. Hoover resident presented a petition of surrounding properties of this zone request and stated that everyone who signed was against the approval of this. *Aguilar* said she has had to deal with problem properties, increased traffic and decreased property value because of the rental properties that are already in this area.

****Action:** The District VI Advisory Board members made a motion to recommend to City Council **Approval (4-2)** of the zone change request based on staff recommendations.

Please review this information when ZON2011-**00021** is considered.

mtd

EXCERPT MINUTES OF THE JULY 21, 2011 WICHITA-SEDGWICK METROPOLITAN AREA PLANNING COMMISSION MEETING

Case No.: ZON2011-21 (deferred from 7-7-11) - Joe M. and Stephany J. Applegate and Robert J and Dana L. Armstrong (owners); Ruggles & Bohm, c/o Chris Bohm (agent) City zone change from SF-5 Single-Family Residential to TF-3 Two-Family Residential on property described as:

Lots 1, 2, 3, 4, 5 and 6, Block 1, Armstrong Estates Addition to Wichita, Sedgwick County, Kansas.

BACKGROUND: The applicant is requesting a zone change to TF-3 Two-Family Residential ("TF-3") for about 1.52 acres of land currently zoned SF-5 Single-Family Residential ("SF-5"). The property is located on the west side of a paved section of Hoover Street, to the southwest of the terminus of 9th Street North at Hoover. The rear of the property abuts the I-235 right-of-way.

Two zoning cases in the vicinity have requested TF-3 zoning. The one closest to this site was located one tract to the south. It was denied and subsequently developed with single-family units. The other request was located at 9th Street North and Robinson, which is one block north and almost one block east on Robinson Street. This request was approved in 2010. With TF-3 zoning, no additional requirements for compatibility setbacks, screening and landscaping are triggered unless the site is to be developed with institutional uses (such as a church) instead of duplex dwellings.

Development along Hoover Street in the four blocks north of Central to 9th Street North consists almost exclusively of single-family residences, except for some duplexes a block north of Central and the two duplexes on the northeast corner of Hoover Street and 9th Street North, situated diagonally across Hoover from this request and located on property zoned MF-29 Multi-Family Residential ("MF-29"). The application area is flanked by two unplatted tracts zoned SF-5 and developed with single-family residences. The next tract to the north is a millwork shop on property zoned LI Limited Industrial ("LI"). I-235 separates the site from DP-70 Sandpiper Bay (a/k/a Miles Lakewood Village) Community Unit Plan. Sandpiper Bay is developed with a row of townhouses (condominiums) ringing Sandpiper Bay, on property zoned MF-18 Multi-Family Residential ("MF-18") and a nursing facility on property zoned B Multi-Family Residential ("B").

CASE HISTORY: The property is platted as Armstrong Estates, recorded January 26, 2007.

ADJACENT ZONING AND LAND USE:

NORTH:	SF-5, LI	Single-family residence, millwork shop
SOUTH:	SF-5	Single-family residential
EAST:	SF-5, MF-29	Single-family residential, two duplexes
WEST:	MF-18, B	I-235, townhouses, nursing facility

PUBLIC SERVICES: The site has access from Hoover Street, a paved local street and other normal public services.

CONFORMANCE TO PLANS/POLICIES: The "2030 Wichita Functional Land Use Guide, as amended May 2005" of the 1999 Update to the Wichita-Sedgwick County Comprehensive Plan identifies this area as appropriate for "urban residential." Urban residential provides for "a full diversity of residential development densities and types typically found in a large urban municipality." Duplex development would fit within this designation.

RECOMMENDATION: Based upon this information available prior to the public hearings, planning staff recommends that the request to rezone the property from SF-5 to TF-3 be approved.

This recommendation is based on the following findings:

1. The zoning, uses and character of the neighborhood: Development along Hoover Street in the four blocks north of Central to 9th Street North consists almost exclusively of single-family residences, except for some duplexes a block north of Central and the two duplexes on the northeast corner of Hoover Street and 9th Street North, situated diagonally across Hoover from this request and located on property zoned MF-29. The application area is flanked by two unplatted tracts zoned SF-5 and developed with single-family residences. The next tract to the north is a millwork shop on property zoned LI. I-235 separates the site from DP-70 Sandpiper Bay (a/k/a Miles Lakewood Village) Community Unit Plan. Sandpiper Bay is developed with a row of townhouses (condominiums) ringing Sandpiper Bay, on property zoned MF-18, and a nursing facility on property zoned B.

2. The suitability of the subject property for the uses to which it has been restricted: The property is suited for SF-5 or TF-3 use.

3. Extent to which removal of the restrictions will detrimentally affect nearby property: The greatest effect will be to add more rental units abutting the single-family residence located to the south and across the street from the single-family residences to the east. No additional requirements for compatibility setbacks, screening and landscaping are triggered by the TF-3 zoning district unless the site would be developed with institutional uses (such as a church) instead of duplex dwellings.

4. Conformance of the requested change to the adopted or recognized Comprehensive Plan and policies: The "2030 Wichita Functional Land Use Guide, as amended May 2005" of the 1999 Update to the Wichita-Sedgwick County Comprehensive Plan identifies this area as appropriate for "urban residential." Urban residential provides for "a full diversity of residential development densities and types typically found in a large urban municipality." Duplex development would fit within this designation.

5. Opposition or support of neighborhood residents. In past cases the neighbors have opposed the addition of duplex development along this segment of Hoover Street. One case was denied. Another case, located a block north and about a block east on Robinson Street, was approved but the property owner had to sign a no-protest agreement for paving of Robinson Street. Both requests were strongly opposed by the neighbors.

6. Impact of the proposed development on community facilities: The increase in traffic will be slight.

DONNA GOLTRY, Planning staff presented the Staff Report.

ALDRICH reported that he lived in the neighborhood.

MILLER STEVENS (Out @2:37 p.m.)

DONNA GOLTRY, Planning Staff presented the Staff Report. She reported that DAB VI voted 4-2 to approve the application.

ALDRICH asked if any formal protests had been filed.

GOLTRY referred to a petition she received just prior to the Planning Commission meeting.

ADLRICH asked about the percentage.

GOLTRY said she had no way of knowing that at this time.

CHRIS BOHM, RUGGLES & BOHM, AGENT FOR THE APPLICANT commented that it was announced at the DAB meeting last night that Hoover Road north to 13th Street will be paved at some point in the future. He referenced a previous zone case regarding pavement of Hoover Road. He said Hoover Road is paved adjacent to this property and the site has sanitary sewer and water. He said this site was platted as part of Armstrong Estates in 2007. He said prior to that the lot sat empty as the neighborhood around it developed. He said according to adjacent plats in the area, development in this corridor began in the 1950's. He said so it has been some time that this property has sat idle. He said catty-corner to the north and east are two Multi-Family Residential (MF-29) zoned lots that have duplexes as well. He said there is a cove of duplexes to the south near Elm and an industrial zoned site to the north. He also mentioned the recent zone change on Robinson Street to the east. He stated that both Planning Staff and District Advisory Board VI have recommended approval of the request. He said duplexes are part of the Comprehensive Plan. He said another point that was brought up at the DAB meeting was that when properties are annexed into the City they automatically come in as Single-Family Residential (SF-5) which is a starting point. He said TF-3 is part of the residential component that requires a zone change. He concluded by mentioning the sheer investment in this piece of property which will ultimately be six duplex lots. He said that is not a small investment in the neighborhood and the community. He asked the Commissioners to take that into consideration as well.

SHEETS mentioned the duplexes shown on the slide presentation and asked what year they were built. He asked if the proposed duplex will be of similar type construction.

GOLTRY commented that the duplexes 2 blocks to the south were built in 2000. She said the duplexes on the slide presentation are between 20-25 years old.

SHEETS asked what type of construction will be used and are there plans that the Commission can review.

BOHM said he showed photos of the work of the development group at the DAB meeting and they can be loaded into the computer for Planning Commission review. He said they are just offering that as information with the submittal. He said one of the owners is Bob Armstrong; the development group manages a multitude of properties and they have a good track record on construction and maintenance of their facilities. He clarified that this is a zone change request not a Planned Unit Development (PUD) or Community Unit Plan (CUP).

KATHY AGUILERA, 915 N. HOOVER said she has lived beside this property for 21 years. She said the property was never up for sale until just recently and she was not informed about it. She said her petition has been signed by all property owners who share a property line with this location. She said no one refused to sign the petition. She said residents don't want increased traffic on Hoover Road. She said everyone will tell you there won't be increased traffic when 6 duplexes are put in, but there will be increased traffic. She said if this is allowed, the property value of her home will decrease. She said rentals decrease property values. She said the area is zoned single-family housing. She asked why can't

we keep it that way. She said one person is asking for this to be rezoned. She said 17 people have signed the petition who do not want it.

ALDRICH asked if she lived close to rentals south of her property and if she has had any issues or problems with the renters of those properties.

AGUILERA said yes she has had problems and that 911 knows her very well.

SHEETS asked if the owner who is proposing this rezoning owns the properties where she is having problems.

AQUILERA said she doesn't know who owns the properties and she can't find out because she would like to get them to mow the grass and to get the renters to quit destroying her privacy fence.

BOHM said the property has been sitting vacant in the midst of other development for 60 plus years. He said it abuts I-235 Highway to the west. He asked if development cannot take place here, then where? He asked where the Commission would ever allow duplex housing. He said this is a neighborhood that has vacant in-fill ground and Two-Family Residential (TF-3) is a reasonable use in the Comprehensive Plan and parallel with single-family. He said they believe this is a fair request and one that makes sense given the economic climate. He said they would like the ability to develop this property that has been sitting idle for so long.

ALDRICH said he lives in and is familiar with the area. He said his personal opinion is that he is not going to support this; he thinks there are enough rentals in the area.

> **MOTION:** To approve subject to staff recommendation.
>
> **HENTZEN** moved, **MCKAY** seconded the motion, and it carried (8-1). **ALDRICH** – No.

7-21-11 MAPC HANDOUT ITEM #5

Crockett, Maryann

From: Debbie Sigman [dsigman@cthb.net]
Sent: Wednesday, July 20, 2011 12:21 PM
To: Crockett, Maryann
Subject: Case # zon2011-21

My name is Debbie Sigman I am the President of the Orchard Park Neighborhood Association.

I would like to express the feelings of the Orchard Park Neighborhood Association members concerning the proposed zone change on Hoover Street. The zone change is go from single family to duplex residences.

The Neighborhood Association members at the meeting last night are unanimous on the fact they do not want this zone c hange to
take place. The neighborhood already has too many rental property, most of Hoover street is rental property as is.

Please pass along this information to the powers that be.

Thank you for your time.

Debbie Sigman
Executive Assistant to Jeff Breault
Carey, Thomas, Hoover & Breault, Inc.
8080 E. Central Ave., Ste. 200
Wichita, KS 67206
316-634-2222
316-634-2229 Fax
dsigman@cthb.net

Confidentiality Notice: The information contained in this email transmittal is privileged and confidential, and is intended for the addressee only. If you are neither the intended recipient nor the employee or agent responsible for delivering this email to the intended recipient, any disclosure of this information in any way or taking of any action in reliance on this information is strictly prohibited. You should not review the text of this message or otherwise disseminate, distribute or copy this email. If you have received this email in error, please notify the person transmitting the information immediately and then permanently delete this message from your system.
Email cannot be guaranteed to be secure or without error. Carey, Thomas, Hoover & Breault, Inc.

øThis is a Legitimate Email From Backup Solutions.Inc Mail Servers!!!!

Agenda Item No. V-2

City of Wichita
City Council Meeting
September 13, 2011

TO: Mayor and City Council

SUBJECT: ZON2011-00022 – City zone change from SF-5 Single-Family Residential to TF-3 Two-Family Residential on property located at 532 South St. Paul. (District IV)

INITIATED BY: Metropolitan Area Planning Department

AGENDA: Planning (Non-Consent)

MAPC Recommendation: The MAPC recommendation is to deny the request due to tie votes on two opposite motions; one to approve and one to deny the request (both motions resulted in a 5-5 vote).

MAPD Staff Recommendation: The MAPD staff recommendation is approval.

DAB IV Recommendation: The DAB IV recommendation is approval (7-0).

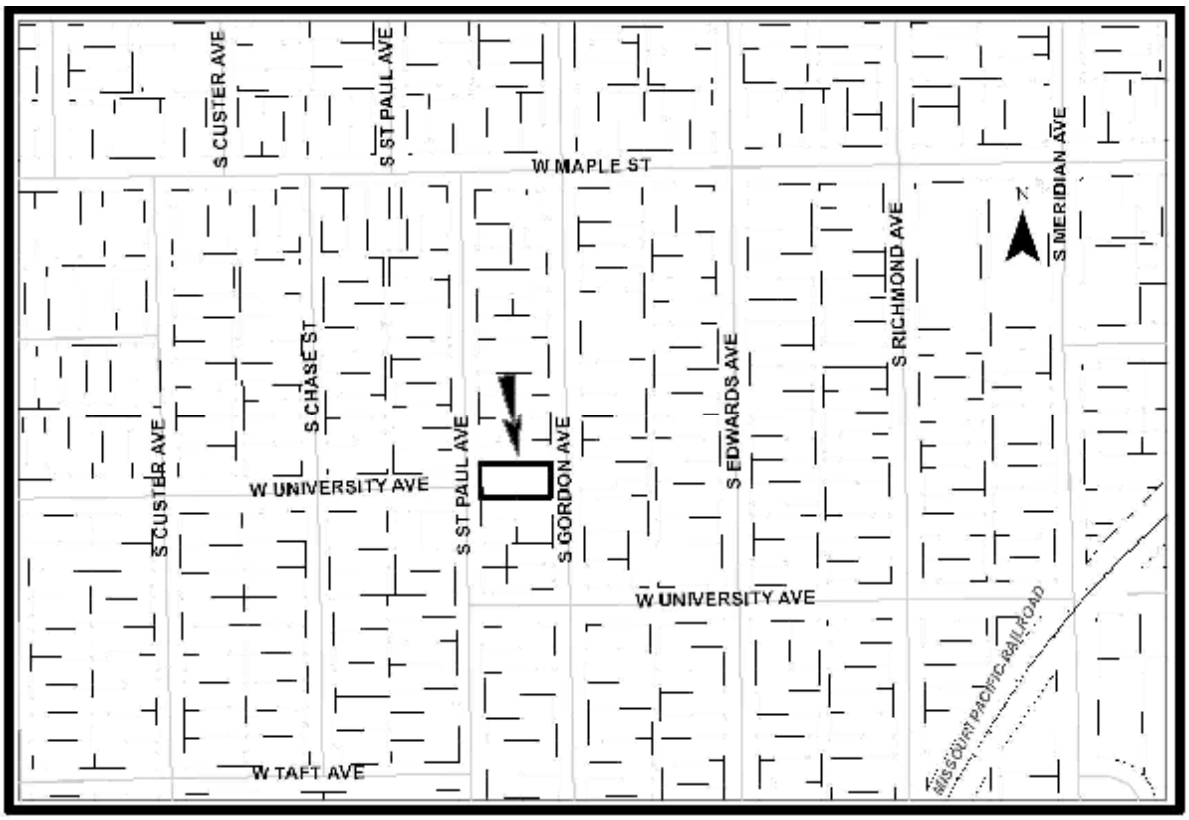

Background: The applicant is requesting TF-3 Two-family Residential ("TF-3") zoning on a .27-acre (11,887.5 square feet) platted zoning lot located at 532 South St. Paul, and currently zoned SF-5 Single-family Residential ("SF-5"). The applicant's ownership has double frontage on South St. Paul and South Gordon Streets. The applicant's property is 75 feet wide by 158.5 feet deep. The western approximately 77 feet of the applicant's ownership, measured from South St. Paul to the eastern overhang of the detached garage, is developed with a single-family residence and a garage, and fronts South St. Paul Street. The eastern approximately 81.5 feet of the applicant's ownership is undeveloped, and fronts South Gordon Street. The applicant intends to divide the existing zoning lot with a Lot Split that would be filed if the zoning request is approved, and build a duplex on the undeveloped portion of the lot that fronts South Gordon Street.

The TF-3 zoning district requires a minimum lot size of 6,000 square feet for a duplex with a front setback of 25 feet and a rear setback of 20 feet. The previously noted minimum lot area and front and rear setbacks present obstacles for the applicant's proposal. As noted above the existing garage is located approximately 77 feet from the St. Paul right-of-way. If one adds the zoning district's 20-foot rear setback requirement to the location of the garage's eastern facade that places the potential lot split line at 97 feet; leaving only the eastern 61.5 feet in which to located the proposed duplex. Deducting the zoning district's combined front and rear setbacks of 40 feet from the vacant eastern 61.5 feet would leave only a 16 (east to west) by 75-foot (north to south) or so wide area in which to build the duplex. In the event the 16 by 75-foot envelope is not sufficient, the applicant has indicated that the existing garage has an eight-foot lean-to that was added to the garage's eastern side that could be removed, which would give a 24-foot (east-west) building envelope. If the applicant is not able to build the desired structure within the 24-foot by 75-foot building envelope, he could file Administrative Adjustments to reduce the front and rear building setbacks by up to 20 percent or up to four feet per setback (eight feet total) which could further widen the building envelope. If the relief provided by one or more Administrative Adjustment is not sufficient, the applicant could file Variances to potentially gain more buildable area. If the applicant removed the eight-foot lean-to from the existing garage, that would make the duplex portion of the lot 6,675 square feet, which exceeds the previously noted minimum lot area requirement. (Planning staff has discussed with the applicant the fact that Administrative Adjustments and Variances are separate and distinct applications from the zone change, and approval is not guaranteed.)

At the District Advisory Board meeting the applicant provided a site plan that shows that it is possible to develop the vacant portion of the site with a 42-foot by 63-foot duplex structure provided two administrative adjustments, reductions in the front setback of five feet and the rear setback by four feet, are obtained and the ten-foot nine inch lean-to is removed from the site's existing garage.

Properties located adjacent to the site are zoned SF-5 and are developed with single-family residences. However, the two residences abutting the application area to the north and the four residences located immediately to the south are developed on non-conforming lots of approximately 3,962.5 square feet when compared to the required minimum lot area of 5,000 square feet. From Gordon Street west to Sheridan Avenue and beyond the area is predominantly zoned SF-5. However, approximately 201 feet to the north of the subject property are three lots zoned TF-3 developed with a duplex (503 South St. Paul). Beginning one-half block east of the subject site are multiple blocks of TF-3 or more intense zoning. Beginning one-half block west of the application area there are four additional areas where lots have been zoned TF-3 that are interspersed within the larger SF-5 zoned area.

Analysis: At the Metropolitan Area Planning Commission (MAPC) meeting held August 4, 2011, the MAPC voted on two motions; one to approve and one to deny. Both motions received tie 5-5 votes that results in a recommendation of denial. Comments expressed by some of the planning commissioners indicate there was concern if a duplex could fit on the size of the buildable area remaining on the subject property, and if a duplex was appropriate at this location. See the attached site plan that was not

reviewed by the MAPC. There were not any protests at the MAPC hearing; however, three individuals inquired if the project was to provide low-income housing, and if off-street parking was to be provided. A two-thirds majority vote of the Wichita City Council is needed to override the MAPC recommendation.

Financial Considerations: The City of Wichita will not incur any atypical financial considerations as a result of this application.

Goal Impact: The application supports the City's goal to promote Economic Vitality.

Legal Considerations: Denial of the application should not present any extraordinary legal considerations; however, if the request is approved, the ordinance will be reviewed and approved as to form by the Law Department.

Recommendation/Actions:
1) Adopt the findings of the MAPC found in the MAPC minutes and deny the zone change, (simple majority vote required); 2) approve the zone change based upon the findings found in the staff report, authorize the Mayor to sign the ordinance and place the ordinance on first reading (requires a two-thirds vote to override the MAPCs recommendation) or 3) return the application to the MAPC for further consideration (simple majority vote required).

Attachments:
- MAPC minutes
- DAB memo
- Site plan

PROPOSED LOT SPLIT EXHIBIT

SAINT PAUL

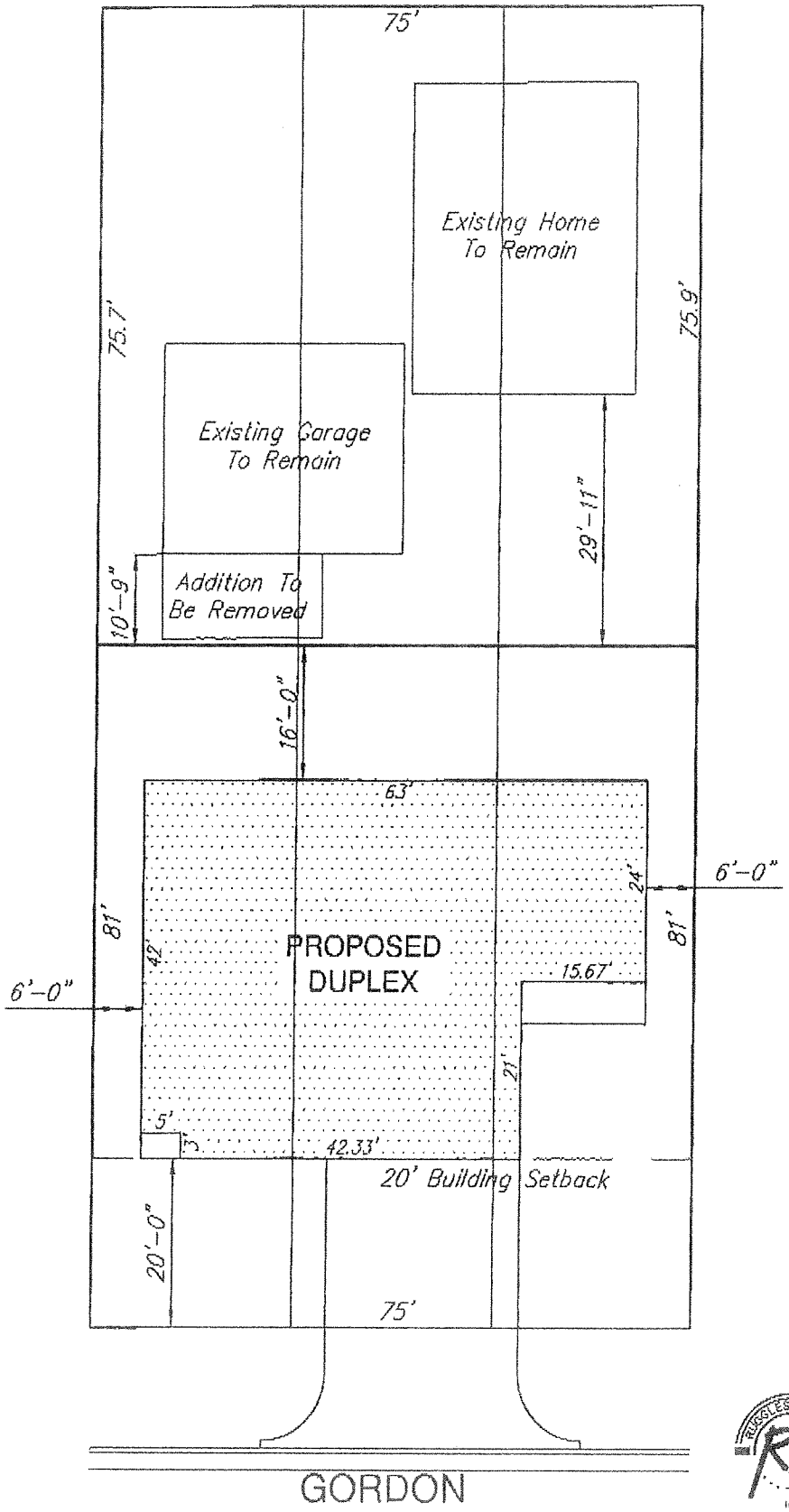

LEGAL DESCRIPTION
Lots 49-51-53
Martinson's 5th Addition
To Wichita, Kansas

Scale
1" = 20'

Notes:

10' Addition on rear of garage to be removed.

Adjustment of Building Setbacks required.

3844F
Aug. 1, 2011

Ruggles & Bohm, P.A.
Engineering, Surveying, Land Planning
924 North Main
Wichita, Kansas 67203
www.rbkansas.com
(316) 264-8008
(316) 264-4821 fax
E-mail: info@rbkansas.com

EXCERPT OF THE AUGUST 4, 2011 WICHITA-SEDGWICK COUNTY METROPOLITAN AREA PLANNING COMMISSION HEARING

Case No.: ZON2011-22 - Justin Blue Properties, LLC requests a City zone change from SF-5 Single-Family Residential to TF-3 Two-Family Residential on property described as:

Lots 49, 51 and 53, Palmerston, now Gordon Avenue, Martinson's 5th Addition to Wichita, Sedgwick County, Kansas.

BACKGROUND: The applicant is requesting TF-3 Two-family Residential ("TF-3") zoning on a .27-acre (11,887.5 square feet) platted zoning lot located at 532 South St. Paul, and currently zoned SF-5 Single-family Residential ("SF-5"). The applicant's ownership has double frontage on South St. Paul and South Gordon. The applicant's property is 75 feet wide by 158.5 feet long. The western approximately 77 feet of the applicant's ownership, measured from South St. Paul to the eastern overhang of the detached garage, is developed with a single-family residence and a garage, and fronts South St. Paul Street. The eastern approximately 81.5 feet of the applicant's ownership is undeveloped, and fronts South Gordon Street. The applicant intends to divide the existing zoning lot with a Lot Split that would be filed if the zoning request is approved, and build a duplex on the undeveloped portion of the lot that fronts South Gordon Street.

The TF-3 district requires a minimum lot size of 6,000 square feet for a duplex with a front setback of 25 feet and a rear setback of 20 feet. The previously noted minimum lot area and front and rear setbacks present obstacles for the applicant's proposal. As noted above the existing garage is located approximately 77 feet from the St. Paul right-of-way. If one adds the zoning district's 20-foot rear setback requirement to the location of the garage's eastern facade that places the potential lot split line at 97 feet; leaving only the eastern 61.5 feet in which to located the proposed duplex. Deducting the zoning district's combined front and rear setbacks of 40 feet from the vacant eastern 61.5 feet would leave only a 16 (east to west) by 75-foot (north to south) or so wide area in which to build the duplex. In the event the 16 by 75-foot envelope is not sufficient, the applicant has indicated that the existing garage has an eight-foot lean-to that was added to the garage's eastern side that could be removed, which would give a 24-foot (east-west) building envelope. If the applicant is not able to build the desired structure within the 24-foot by 75-foot building envelope, he could file Administrative Adjustments to reduce the front and rear building setbacks by up to 20 percent or up to four feet per setback (eight feet total) which could further widen the building envelope. If the relief provided by one or more Administrative Adjustment is not sufficient, the applicant could file Variances to potentially gain more buildable area. If the applicant removed the eight-foot lean-to from the existing garage, that would make the duplex portion of the lot 6,675 square feet, which exceeds the previously noted minimum lot area requirement. (Planning staff has discussed with the applicant the fact that Administrative Adjustments and Variances are separate and distinct applications from the zone change, and approval is not guaranteed.)

Properties located adjacent to the site are zoned SF-5 and are developed with single-family residences. However, the two residences abutting the application area to the north and the four residences located immediately to the south are developed on non-conforming lots of approximately 3,962.5 square feet when compared to the required minimum lot area of 5,000 square feet. From Gordon Street west to Sheridan and beyond the area is predominantly zoned SF-5. However, approximately 201 feet to the north of the subject property are three lots zoned TF-3 developed with a duplex (503 South St. Paul). Beginning one-half block east of the subject site are multiple blocks of TF-3 or more intense zoning. Beginning one-half block west of the application area are four additional areas where lots have been zoned TF-3 that are interspersed within the larger SF-5 zoned area.

CASE HISTORY: The property is part of Martinson's 5th Addition, which was recorded circa 1886.

ADJACENT ZONING AND LAND USE:

NORTH: SF-5 Single-family Residential and TF-3 Two-family Residential; single-family and duplex residential

SOUTH: SF-5 Single-family Residential; single-family residential

EAST: SF-5 Single-family Residential and TF-3 Two-family Residential; single-family and duplex residential

WEST: SF-5 Single-family Residential and TF-3 Two-family Residential; single-family and duplex residential

PUBLIC SERVICES: The property has access to two paved local streets, St. Paul and Gordon, and to normal publicly supplied services.

CONFORMANCE TO PLANS/POLICIES: The "2030 Wichita Functional Land Use Guide" as amended May 2005 of the 1999 Update to the Wichita-Sedgwick County Comprehensive Plan identifies this area as appropriate for "urban residential." Urban residential provides for "a full diversity of residential development densities and types typically found in a large urban municipality." Duplex development would fit within this designation.

RECOMMENDATION: Based upon information available prior to the public hearings, planning staff recommends that the request be APPROVED.

This recommendation is based on the following findings:

1. The zoning, uses and character of the neighborhood: Properties located adjacent to the site are zoned SF-5 and are developed with single-family residences. However, the two residences abutting the application area to the north and the four residences located immediately to the south are developed on non-conforming lots of approximately 3,962.5 square feet when compared to the current required 5,000 square-foot minimum lot area for a single-family use in SF-5. From Gordon Street west to Sheridan and beyond the area is predominantly zoned SF-5. However, approximately 201 feet to the north of the subject property are three lots zoned TF-3 developed with a duplex (503 South St. Paul). Beginning one-half block east of the subject site are multiple blocks of TF-3 or more intense zoning. Beginning one-half block west of the application area are four additional areas where lots have been zoned TF-3 that are interspersed within the larger SF-5 zoned area.

2. The suitability of the subject property for the uses to which it has been restricted: The property is zoned SF-5 and could continue to be used as part of the existing single-family use.

3. Extent to which removal of the restrictions will detrimentally affect nearby property: Approval of the request should not detrimentally impact nearby property owners to any greater extent than the existing duplex units located throughout the larger neighborhood.

4. Relative gain to the public health, safety and welfare as compared to the loss in value or the hardship imposed upon the applicant: Approval of the request would allow for more efficient use of the land and public utilities that serve the application area and the larger neighborhood, and provide additional living units.

5. Conformance of the requested change to the adopted or recognized Comprehensive Plan and policies: The "2030 Wichita Functional Land Use Guide" as amended May 2005 of the 1999 Update to the Wichita-Sedgwick County Comprehensive Plan identifies this area as appropriate for "urban residential." Urban residential provides for "a full diversity of residential development densities and types typically found in a large urban municipality." Duplex development would fit within this designation.

6. Impact of the proposed development on community facilities: Existing facilities are in place to accommodate development permitted by the proposed zone change.

DALE MILLER, Planning staff presented the Staff Report.

CHAIR MILLER STEVENS said she had a couple of questions from the public regarding whether this will be developed as low rent housing and whether street parking will be allowed.

MILLER said this was being developed by a private individual so he will set the rental price. He said the Unified Zoning Code (UZC) code requires one off-street parking space per dwelling unit like a regular home.

ALDRICH said he had several questions and would like to hear the case.

DALE MILLER, Planning Staff presented the Staff Report.

ALDRICH asked about the utility easements. He mentioned power lines down the center of the property and said the lean-to appears to be in the setback now.

MILLLER said this is one giant lot and the applicant will apply for a lot split once the zoning is in place. He said they will have to provide sufficient room for the easements or apply for a variance at that time.

ALDRICH said there doesn't appear to be enough room for a duplex.

MITCHELL referenced the Staff Report regarding if the 16-foot x 75-foot envelope is not sufficient the applicant could get eight more feet which would provide 24 feet of width for a duplex building.

MILLER said yes, from east to west. He said he has not seen the building design. He said if the applicant cannot accomplish that by removing the lean-to, he can file an administrative adjustment to reduce the rear setback or apply for a variance.

MITCHELL clarified that the applicant needs to obtain zoning before any of those things can happen or put a single-family dwelling at the site with those adjustments.

MILLER replied even with a single-family residence, the lot would need to be split, but the applicant would not need the zoning.

> **MOTION:** To deny the application.
>
> **MITCHELL** moved, **ALDRICH** seconded the motion, and the motion was moot (5-5). **DENNIS, DOWNING, KLAUSMEYER, MCKAY** and **MILLER STEVENS** – No.

MCKAY clarified that the site was approximately 12,000 square feet.

MILLER said that was correct based on the plat dimensions. He added that the DAB recommended approval of the application.

Staff requested an affirmative vote one way or the other.

> **MOTION:** To approve subject to staff recommendation.
>
> **MCKAY** moved, **DOWNING** seconded the motion, and it failed (5-5).
> **ALDRICH, DOOL, HENTZEN, MITCHELL** and **SHEETS** - No.

8-4-11 MAPC HANDOUT ITEM #4

CITY OF WICHITA

INTEROFFICE MEMORANDUM

TO: Wichita City Council

MAPC Members

FROM: Kelli Glassman, Neighborhood Assistant, District IV

SUBJECT: ZON2011-00022

DATE: August 3, 2011

On Monday, August 1, 2011, the *District Advisory Board (DAB) for Council District 4* considered this request for a zone change from SF-5 Single-Family Residential to TF-3 Two-Family Residential; generally located on property fronting Gordon Street, south of 523 S. Gordon, on the east half of 532 S. St. Paul Street.

The applicant was present and both the applicant and MAPC staff present clarified and addressed the following Board questions:

- the eastern third of the property is vacant
- there is currently no fence on the property
- there has been no known neighborhood opposition to this request
- parking requirements state that one space per housing unit must be provided (the applicant is going to put garages on both housing units)

DAB members voted 7-0 to recommend <u>approval</u> of the zone change.

Please review this information when this request is considered.

City of Wichita
City Council Meeting
September 13, 2011

TO: Wichita Airport Authority

SUBJECT: Supplemental Agreement No. 6
AECOM Program and Construction Management Services
Air Capital Terminal 3 (ACT 3) Program

INITIATED BY: Department of Airports

AGENDA: Wichita Airport Authority (Non-Consent)

Recommendation: Approve Supplemental Agreement No. 6.

Background: A contract with AECOM to provide Program and Construction Management Services for the Air Capital Terminal 3 (ACT 3) Program and related projects was approved by the Wichita Airport Authority (WAA) on June 7, 2005.

Analysis: The original contract period ran for 60 months (from July 11, 2005, through July 11, 2010). The contract was extended in Supplemental Agreement No. 3 during the program's financial review, and it was further extended by the WAA in Supplemental Agreement No. 5 on March 1, 2011, to run on a month-to-month basis until a decision was made to move forward with the new terminal project. The WAA voted to proceed with the program on June 21, 2011, and established the budgets for the new terminal ($160 million) and for the parking/rental car facilities ($40 million) projects.

The purpose of this Supplemental Agreement is to extend AECOM's Program Management services until the completion and close-out of the projects, and to provide full Construction Management (CM) services. The program is extremely complex, with a multitude of separate construction elements occurring simultaneously with multiple contractors on-site that will require intense supervision, scheduling, and oversight to manage numerous diverse factors of the projects. In addition, during the CM phase, AECOM will provide technical inspection and materials testing services, will review all change orders and schedules proposed by the contractors, and manage the change review processes. AECOM will be providing coordination of numerous tenant improvements, such as airlines, food and beverage and retail concessionaires, government agencies, and rental car and other commercial ground transportation operators.

A number of program elements have not yet been designed, such as parking and rental car facilities, and tenant improvements, as well as sophisticated equipment for telecommunications, electronic signage, and airline passenger processing systems. AECOM will oversee the procurement, negotiations, and implementation of the necessary design contracts and task orders. It will also provide design management in order to ensure proper stakeholder involvement, schedule compliance, scope control, and budget adherence. AECOM will be responsible for the coordination of numerous contractors and will ensure that construction activities do not interfere with day-to-day Airport and airline operations and passenger movements through the facilities.

This Supplemental Agreement will be in effect until January 31, 2015, which is near the anticipated completion and opening date of the new terminal in late 2014.

Financial Considerations: Based upon the specific tasks to be performed under the Scope of Services, the not-to-exceed cost for this Supplemental Agreement is $11,533,856. Of that total, it is broken down as follows between the two major program elements:

ACT 3 Terminal and Related CIP Projects

	Fees
Program Management	$3,398,540
Construction Management Services	$5,276,702
Total	**$8,675,242**

Parking, Rental Car Facilities and Related CIP Projects

	Fees
Program Management	$904,279
Construction Management Services	$1,954,335
Total	**$2,858,614**

Total ACT 3 Program, Parking Garage & Related CIP Projects

	Fees	As a Percent of Construction
Extension of Program Management	$4,302,819	2.6%
Construction Management Services	$7,231,037	4.4%
Supplemental Agreement No. 6 - Total	**$11,533,856**	**7.0%**

The above fees were anticipated when the program financial capacity study was conducted in 2006. Thus, this amount is included in the current budget for the Air Capital Terminal 3 Project and the Parking & Rental Car Facilities Project. The percentage fees are well within a range to be expected for public transportation projects in the Midwest, according to Construction Management Association of America surveys, where the median fee is 6.9 percent for solely Construction Management Services.

These fees are calculated and presented in a Federal Aviation Administration-approved cost-plus-fixed-fee format so as to preserve the ability to obtain federal grant funding. The AECOM contract history is summarized below:

	Amount	Description	Date
Contract	$4,552,857	Program Manager Contract	5/31/2005
SA#1	21,521	Terminal Security Cameras Const. Phase Services	2/9/2010
SA#2	445,094	Contract Amendments	3/9/2010
SA#3	574,668	Services Extension	7/20/2010
SA#4	110,008	Construction Management for CCTV Upgrade	1/25/2011
SA#5	567,906	Services Extension	3/1/2011
SA#6	11,533,856	Services Extension & Construction Management for Terminal and Parking/Rental Car Facilities	9/13/2011
	$17,805,910	Total Fee	

This Supplemental Agreement includes an estimated use of Disadvantaged Business Enterprise (DBE) subcontractors by AECOM in the amount of approximately 20 percent of the fee.

Goal Impact: The construction of the proposed new airline passenger terminal and related projects contributes to the Economic Vitality of Wichita.

Legal Considerations: The Law Department has reviewed this Supplemental Agreement and approved it as to form.

Recommendations/Actions: It is recommended that the Wichita Airport Authority approve Supplemental Agreement No. 6 with AECOM and authorize the necessary signatures.

Attachments: Supplemental Agreement No. 6.

Supplemental Agreement #6

To The

Agreement for Professional Services Dated June 7, 2005

Between

Wichita Airport Authority, Wichita, Kansas

Party of the First Part, Hereinafter Called The

"Owner"

And

AECOM

Party of the Second Part, Hereinafter Called The

"Program Manager"

WITNESSETH:

Whereas, there now exists a Contract dated June 7, 2005, and Supplemental Agreement #1 dated February 9, 2010, Supplemental Agreement #2 dated March 9, 2010, Supplemental Agreement #3 dated July 20, 2010, Supplemental Agreement #4 dated January 25, 2011, and Supplemental Agreement #5 dated March 1, 2011 between the two parties covering Program Management services to be provided by the Program Manager at Wichita Mid-Continent Airport.

Whereas, the Contract is currently on a month-to-month basis, and it is the desire of both parties that the Contract be extended as noted below.

Now Therefore, the parties hereto mutually agree as follows:

The Program Management Contract will be amended with this Supplemental Agreement to include the following services:

1. ARTICLE VII – PAYMENT PROVISIONS: Revise paragraph B as follows:

   B. "The Term of the Agreement shall commence on the date of the Notice to Proceed issued to the CONSULTANT, and shall terminate on January 31, 2015, unless extended or terminated in accordance with the provisions hereof."

   Payment to the Program Manager for the performance of the above listed services required by this agreement shall be made on the basis of the actual costs and expenses plus a fixed fee amount in accordance with the Contract, based on revised Exhibit B – Cost Estimate for Supplemental Agreement #6. The total compensation of the extension of Program Management Services and Construction Management Services shall be not-to-exceed $11,533,856 ($10,456,980 for cost plus a fixed fee in the amount of $1,076,876).

2. SCOPE OF SERVICES

I. Extension of Consulting Services as defined in the Original Scope of Work, and Basic Services as revised within the attached Exhibit A for Supplemental Agreement #6.

3. Provisions of the Original Contract

The parties hereunto mutually agree that all provisions and requirements of the existing Contract, not specifically modified by this Supplemental Agreement, shall remain in force and effect.

In Witness Whereof, the Owner and the Program Manager have executed this Supplemental Agreement as of this 13th day of September, 2011.

ATTEST:

WICHITA AIRPORT AUTHORITY
2173 Air Cargo Road
WICHITA, KANSAS

By:_____
Karen Sublett, City Clerk

By:_____
Carl Brewer, President
"OWNER"

By:
_____
Victor D. White, Director of Airports

CONSULTANT ATTEST:

Name: AECOM

Address: 2202 N. West Shore Boulevard, Suite 455
Tampa, FL 33607

By:_____

By:_____

"CONSULTANT"

Title:_____

Title:_____

APPROVED AS TO FORM:

City Attorney: _____ Date: _____

Attachments:

Exhibit A: Scope of Services

Exhibit B: Cost Estimate

Revised Exhibit A for Supplemental Agreement #6

Air Capital Terminal 3 (ACT 3) Redevelopment Program
Wichita Mid-Continent Airport
Wichita Airport Authority

Project No.: 60049856

ACT 3 Construction Management Services for Terminal-Related, Parking and Rental Car Facilities Projects

Supplemental Agreement No. 6

SCOPE OF SERVICES

Basic Services

1.0 Preconstruction and Design Phase Services

Add to paragraph 1.2:

The CONSULTANT shall provide all Pre-Construction and Design Phase Management services as described in the Agreement for the Air Capital Terminal 3 (ACT 3) Program, to include all terminal-related, parking and rental car facilities as directed by the OWNER.

2.0 Financial Planning Services

Add to this section:

2.8 Execution of the Financial Capacity, Airline Agreement, Terminal Concessions, and Rental Car Agreement tasks as previously identified and implemented pursuant to a detailed Statement of Services as agreed upon between the OWNER and the CONSULTANT including presentations as required.

2.9 Other Financial and Business Planning and Legal Liaison

Given the multi-year timeframe and nature of this contract, the OWNER is likely to require assistance with financial and business planning matters and legal liaison assistance that cannot currently be anticipated. As requested and as directed by the OWNER, CONSULTANT will also provide other assistance and advice to the OWNER on matters related to financing the Terminal-related, parking and rental car projects, and the business matters related to airline, rental car or concessionaire issues or agreements, and the Airport's Capital Improvement Program, as well as the overall finances of the OWNER, on an as-needed basis. A detailed scope and budget will be prepared for any services requested by the OWNER pursuant to this Task.

4.0 Services During Construction

Delete the entire section and replace with the following:

4.0 Construction Management Services

The CONSULTANT will provide the resident project staff and subconsultants required to perform the tasks outlined in the following scope of work for those projects and packages listed in Section 1 of this Scope of Work.

4.1 CONSULTANT will plan, facilitate and coordinate a one day partnering session for the Terminal Building (Package 12) project.

4.2 In conjunction with the OWNER and Designer, the CONSULTANT will facilitate all pre-construction conferences.

4.3 The CONSULTANT shall oversee the work of the Designers in the plan review and construction permitting process as necessary for timely permitting, including managing the expediting process. The consultant will maintain duplicate copies of all permits, insurance certificates, bonds, labor affidavits, and other government agency documents as appropriate.

4.4 The CONSULTANT will provide construction contract administration and will, in accordance with OWNER's policies and for the appropriate projects, comply with the FAA Central Region Supplemental Guidance, dedicate on-site personnel to establish and implement administrative coordination and communication procedures among the CONSULTANT, the OWNER, the Designer, Contractors, and other appropriate parties.

4.5 The CONSULTANT will establish and implement procedures and record management for submittals, material samples, change orders, payment requests, requests for information and other procedures and maintain all daily job reports, logs, files, and other necessary documentation.

4.6 The CONSULTANT will review schedules submitted by the Contractor(s) for compliance with the proper level of activity, the order, sequence and interdependence of all significant work items including construction procurement, fabrication, testing, startup and inspection, and delivery of critical or special materials and equipment, and submittals and approvals of critical samples, shop drawings, procedures or other documents that could have a schedule impact.

4.7 The CONSULTANT will report to the OWNER in writing, on a monthly basis, a status of the Program progress. The report will include the CONSULTANT's review of the Designer's, other CONSULTANT's and Contractors' progress payments, a status report on all open Change Orders, and an evaluation of the Project Master Schedule. Such evaluation will include a revised copy of the Summary Master Schedule reflecting the current progress, approved revisions and progress photos obtained from the field.

4.8 The CONSULTANT will analyze construction phasing for operational considerations and potential acceleration.

4.9 The CONSULTANT will provide site phasing and logistics coordination with OWNER's management team to facilitate its on-going terminal and flight operations.

4.10 The CONSULTANT will perform construction cost estimates in the manner consistent with FAA Central Region Supplemental Guidance requirements for independent construction estimates. This includes independent construction cost estimates that must be prepared prior to receiving bids for construction contracts as well as performing the appropriate Sponsor cost analyses and evaluation of pricing for construction changes during the course of the Work.

4.11 The CONSULTANT will remain apprised of all airport activity that may have an impact on construction activities and coordinate those activities accordingly. The CONSULTANT will also dedicate on-site personnel to coordinate with the proper stakeholders those construction activities that may impact operational activities.

4.12 The CONSULTANT will maintain a cost management system compatible with the overall program level system that will track, manage and forecast project level cost commitments, changes and forecasts.

4.13 As the OWNER's representative at the construction site, the CONSULTANT will be the party through which change orders, pay requests, requests for information and other correspondence and information will be processed and will be communicated from the Contractor to the OWNER, the Designer, or both, and from the OWNER, the Designer or both to the Contractor.

4.14 The CONSULTANT will review the Designer's, other Consultants' and Contractors' payment requests for accuracy and determine whether the amount requested reflects the progress of the work. The CONSULTANT will then make a recommendation to the OWNER.

4.15 The CONSULTANT will establish and implement a Change Order control system. The consultant will make recommendations to the OWNER and Change Control Board concerning additional costs or credits, time extensions and will verify that work and time adjustments, if any, require by approved change orders, have been incorporated into the Contractor's Construction Schedule.

4.16 The CONSULTANT will review and evaluate all potential contract changes, determine constructability and impacts to cost and schedule and merit if submitted by the Contractor. The CONSULTANT will prepare the necessary documents to initiate changes to the Work either to the Contractor or Designer. The CONSULTANT will prepare and organize negotiations with the Contractor(s) and/or Designer as needed to best represent a fair and equitable Change Order or Supplemental Agreement.

4.17 The CONSULTANT will coordinate the design of tenant improvements, including airline, food and beverage facilities, retail shops, rental car facilities and ground transportation areas, with the design of appropriate projects included in the program. Review design documents prepared by tenants for compliance with design standards adopted for the program as well as interface issues. Develop a strategy for coordination and scheduling of tenant construction with Program construction. Schedule and conduct coordination meetings.

4.18 The CONSULTANT will review and monitor the Contractor's quality control plan and controls throughout the duration of the Contract and for each element of the construction for compliance with the Contract Documents.

4.19 The CONSULTANT will conduct construction site meetings with the Contractors, and conduct overall coordination meetings with all of the Contractors, and, as appropriate, with the OWNER and the Designer, and will record, transcribe and

distribute minutes to all attendees, stakeholder and all other appropriate parties. The meetings will be the forum for discussing progress in the areas of safety, quality, scope changes, administrative issues and schedule.

4.20 The CONSULTANT will provide resident engineering services, as needed, to coordinate and document the progress and quality of the Work and its conformance to the Contract Documents, quantity and type of work force the contractor(s) have on site, inventory of equipment on site and its utilization and other quantifiable factors to be made a part of the project record. All staff will be required to meet the requirements to obtain a security badge.

4.21 Resident Engineers will have the necessary minimum qualifications and will follow all guidance required by the FAA Central Region Supplemental Guidance Section 1000 (Construction Development Projects) for the Terminal Building project (Package 12).

4.22 The CONSULTANT will provide technical inspection and testing. The CONSULTANT will dedicate on-site personnel to ensure technical inspection reports are in a format approved by the OWNER and received by the CONSULTANT in a timely manner.

4.23 The CONSULTANT will engage the services of an accredited materials testing laboratory to provide quality assurance testing as required by the contract documents and industry standards.

4.24 The CONSULTANT will provide the necessary Special Inspections as required by the relevant designer of record and the Building Official having jurisdictional authority.

4.25 The CONSULTANT will provide facility commissioning oversight and develop a transition plan assessment for coordinating, scheduling, and implementing the transition of all operational functions and entities from the existing terminal to the new terminal.

4.26 The CONSULTANT will, in conjunction with the Designer, make recommendations for corrective action on nonconforming work. The CONSULTANT will dedicate on-site personnel to make recommendations to the OWNER and the Designer in instances where CONSULTANT observes work that, in the CONSULTANT's opinion should be rejected.

4.27 The CONSULTANT will, in conjunction with the Designer, coordinate the preparation of lists of incomplete or defective work ("Punch Lists") by the Contractors prior to Substantial Completion. When incomplete work or defective work has been remedied, the CONSULTANT will issue, upon the OWNER's concurrence, a Certificate of Substantial Completion.

4.28 The CONSULTANT will, at the conclusion of corrective action of all Punch List items, make a final inspection of the facilities in conjunction with the Designer, prepare a report of the final inspection for the OWNER and will make recommendations to and assist the OWNER in establishing the Final Acceptance of the Work.

4.29 The CONSULTANT will provide risk and claims management and will implement, coordinate and chair dispute resolution issues.

4.30 The CONSULTANT will review the contents of any claim submitted by any Contractor or the Designer, assemble information concerning the claim, review the impact of the alleged cause, and make recommendations to the OWNER with respect to the claim in a timely manner. The CONSULTANT will further negotiate the claim on behalf of OWNER pursuant to the OWNER's instructions. The CONSULTANT will make a final recommendation to the OWNER concerning settlement or other appropriate action. Detailed claims analysis, including detailed time impact analyses, trial assistance or depositions/testimony will be provided as an Additional Service.

4.31 The CONSULTANT will coordinate and expedite the transmittal of record documents from the Designer to the OWNER. Upon receipt of the said documents, the CONSULTANT will perform a spot check to generally assure that the documents are complete and accurate.

4.32 The CONSULTANT will coordinate and enforce redlining requirements of the contractor(s) in order to maintain as-built record documents in a manner determined by the project team and acceptable to the OWNER.

4.33 The CONSULTANT will expedite and facilitate the attainment of the Occupancy Permits as they relate to the various projects under the Program.

4.34 The CONSULTANT will provide project closeout documents and reports in accordance with the requirements of the FAA, TSA and OWNER.

Add the following section:

6.0 Additional Services

The following items of work are additional services the OWNER may wish to include under the scope of this agreement. Upon notification from the OWNER, the CONSULTANT shall provide a cost estimate to provide these services in accordance with this Agreement.

6.1 The CONSULTANT shall provide independent fee estimates in the manner consistent with FAA Central Region Supplemental Guidance requirements for independent fee estimates.

6.2 The CONSULTANT shall provide Commissioning Services for the Terminal and/or Parking Facilities Projects or any other project so designated by the OWNER.

6.3 The CONSULTANT will plan, facilitate and coordinate a one day partnering session for the Parking and Rental Car Facilities (Package 10) project.

- END OF EXHIBIT A -

EXHIBIT "B"

Air Capital Terminal 3 Redevelopment

Wichita Mid-Continent Airport

Wichita Airports Authority

AECOM

Supplemental Agreement No. 6 - Terminal & Systems Related Projects Summary

1 **Direct Salary Cost**

	Title	Start	Finish	Hours	Rate/Hour	Total Cost ($)
1.1	Principal	Aug-11	Aug-14	1,010	$88.00	88,880
1.2	Program Manager	Aug-11	Sep-11	234	$76.17	17,824
1.3	Program/ Construction Manager	Aug-11	Aug-14	4,300	$68.00	292,400
1.4	Deputy Program Manager	Aug-11	Aug-14	4,300	$30.00	129,000
1.5	Design Manager	Aug-11	Dec-12	506	$43.00	21,758
1.6	Constructability Manager	Aug-11	Dec-12	556	$43.00	23,908
1.7	PM Admin. Support	Sep-11	Aug-14	4,230	$18.00	76,140
1.8	Executive Assistant	Oct-11	Aug-14	3,815	$23.00	87,745
1.9	Project Controls Manager	Sep-11	Aug-14	4,233	$53.00	224,349
1.11	Deputy ProjectControls Manager	Jul-12	Aug-14	2,890	$40.00	115,600
1.12	Cost Control Engineer	Jan-12	Jul-14	3,420	$28.00	Sub
1.13	Systems Support	Jan-12	Jul-14	800	$32.00	25,600
1.14	Document Control Manager	Dec-11	Aug-14	3,747	$30.00	Sub
1.15	Technology PM Support	Jan-12	Jul-14	312	$75.00	23,400
1.16	Construction Logistics	Aug-11	Feb-12	340	$64.00	21,760
1.17	PM Systems Manager	Aug-11	Feb-12	205	$85.00	17,425
1.18	Systems Support	Aug-11	Feb-12	265	$43.00	11,395
1.19	Scheduling Manager	Aug-11	Feb-12	145	$74.00	10,730
1.20	Design Manager	Aug-11	Feb-12	80	$50.00	4,000
1.21	Resident Engineer - Terminal	Nov-11	Aug-14	5,416	$52.00	281,632
1.22	Office Engineer - Terminal	Aug-11	Aug-14	5,900	$30.00	177,000
1.23	Contract Administrator - Terminal	Jan-12	Aug-14	5,167	$25.00	Sub
1.24	Lead QA Inspector	Jan-12	Aug-14	5,150	$30.00	154,500
1.25	Clerical Terminal	Jan-12	Aug-14	5,150	$14.00	72,100
1.26	BHS Inspector	Mar-12	Apr-14	360	$36.00	Sub
1.27	Electrical QA Inspector	Mar-12	Aug-14	4,750	$28.00	133,000
1.28	Mech./Plumb./FP QA Inspectors	Feb-12	Aug-14	6,350	$28.00	177,800
1.29	Structural Inspector/ Spec. Insp.	Oct-12	Sep-13	3,000	$45.00	Sub
1.30	Systems Inspector	Apr-13	Feb-15	3,000	$40.00	120,000
1.31	Senior Lead Inspector	Jan-12	Feb-12	48	$38.00	1,824
			Total	79,679		2,309,770
					Salary escalation at 3% annually	$71,393
					Total Direct Salary Cost	**$2,381,162**

2 **Labor and General & Administrative Costs**

	Field	Office	
Percentage of Direct Salary Costs	122.63%	157.97%	**$2,947,343**

3 **Direct Nonsalary Expenses**

Living & Traveling Expenses	
Air Travel	36,125
Local Transportation (Allowance)	10,625
Per Diem	30,069
Communication Expenses	
Office Communication	12,000
Mobile Communications	10,200
Direct Services & Equipment	
Legal & Accounting	N/A
Office Trailers (Maintenance)	46,375
Office Furniture Rental/Purchase	30,100
Office Supplies (Allowance)	15,000
Computer Rentals & Software	23,800
Plotter & Supplies	12,240
Special Consulting	
PE Review-Special Insp.	12,000
Tenant Design Review	6,000
Claims Consulting (Allowance)	25,000
Outside Design Review (Allowance)	
Testing & Laboratory Charges (Allowance)	150,000
Printing& binding	10,000
Job Vehicles(3)	111,600
Similar costs not G&A	N/A
Direct Supplies, Mat'ls & Expenses (Allowance)	13,500
Reprographics	7,500
Personnel Recruitment	
Advertising	5,000
Relocation (Allowance)	25,000
Others	N/A
	592,134
Total Direct Nonsalary Expenses	**$592,134**

8/24/2011

Air Capital Terminal 3 Redevelopment
Wichita Mid-Continent Airport
Wichita Airports Authority

AECOM

Supplemental Agreement No. 6 - Terminal & Systems Related Projects Summary

4	**Subtotal of Items 1, 2, and 3**		Subtotal Item 4	**$5,920,639**
5	**Fixed Payment 15% of Item 4**		Subtotal Item 5	**$888,096**
6	**Subcontract Cost**			
	Civil Technology, Inc.	1,033,014		
	LeighFisher	342,493		
	Mauler Engineering, LLC	378,000		
	Transition Plan Implementation	63,000		
	US Cost	50,000		
			Subtotal Item 6	**1,866,507**
7	**Total Cost, Items 4, 5, 6**			**$8,675,242**

8/24/2011

Air Capital Terminal 3 Redevelopment

Wichita Mid-Continent Airport
Wichita Airports Authority

AECOM

Supplemental Agreement No. 6 - Parking & Rental Car Facilities Summary

1. **Direct Salary Cost**

	Title	*Start*	*Finish*	*Hours*	*Rate/Hour*	*Total Cost ($)*
1.1	Principal (Sub)	Jan-12	Jun-14	348	$55.00	Sub
1.2	Program/ Construction Manager	Jan-12	Jun-14	1,600	$68.00	108,800
1.3	Deputy Program Manager	Jan-12	Jun-14	1,600	$30.00	48,000
1.4	Design Manager	Jan-12	Jun-14	720	$43.00	30,960
1.5	Constructability Manager	Jan-12	Jun-14	720	$43.00	30,960
1.6	PM Admin. Support	Jan-12	Jun-14	1,600	$18.00	28,800
1.7	Executive Assistant	Jan-12	Jun-14	1,600	$23.00	36,800
1.8	Project Controls Manager	Jan-12	Jun-14	1,600	$53.00	84,800
1.9	Deputy Project Controls Manager	Jan-12	Jun-14	1,280	$40.00	51,200
1.11	Cost Control Engineer	Jan-12	Jun-14	1,600	$28.00	Sub
1.12	Systems Support	Jan-12	Jun-14	200	$32.00	6,400
1.13	Document Control Manager	Jan-12	Jun-14	1,600	$30.00	Sub
1.14	Structural Review	Jan-12	Mar-12	120	$60.00	Sub
1.15	Resident Engineer - Garage	Jan-13	Sep-14	3,500	$45.00	Sub
1.16	Project Engineer - Garage	Jan-13	Jun-14	3,000	$30.00	Sub
1.17	Clerical Garage	Jan-13	Sep-14	3,500	$16.00	Sub
1.18	Lead QA Inspector Garage	Jan-13	Jun-14	3,000	$30.00	90,000
				27,588		$516,720
				Salary escalation at 3% annually		$15,734
				Total Direct Salary Cost		$532,454

2. **Labor and General & Administrative Costs**

	Field	*Office*	
Percentage of Direct Salary Costs	121.81%	161.00%	$648,582

3. **Direct Nonsalary Expenses**

Living & Traveling Expenses	
Air Travel	Sub
Local Transportation (Allowance)	Sub
Per Diem	Sub
Communication Expenses	
Office Communication	3,000
Mobile Communications	2,500
Direct Services & Equipment	
Legal & Accounting	N/A
Office Trailers	N/A
Office Furniture Rental/Purchase	N/A
Office Supplies (Allowance)	3,000
Computer Rentals & Software	2,500
Plotter & Supplies	1,500
Special Consulting	N/A
PE Review-Special Insp.	5,000
Testing & Laboratory Charges	50,000
Printing& binding	5,000
Job Vehicles	N/A
Similar costs not G&A	N/A
Direct Supplies, Mat'ls & Expenses (Allowance)	3,000
Reprographics	2,000
Personnel Recruitment	
Advertising	Sub
Relocation (Allowance)	Sub
Others	
	77,500
Total Direct Nonsalary Expenses	$77,500

Air Capital Terminal 3 Redevelopment

Wichita Mid-Continent Airport
Wichita Airports Authority

Supplemental Agreement No. 6 - Parking & Rental Car Facilities Summary

AECOM

4.	**Subtotal of Items 1, 2, and 3**			
			Subtotal Item 4	$1,258,536
5.	**Fixed Payment 15% of Item 4**			
			Subtotal Item 5	$188,780
6.	**Subcontract Cost**			
	Civil Technology, Inc.	$ 1,243,760		
	LeighFisher	$ 141,558		
	Mauler Engineering (Allowance)	$ 20,979		
	US Cost (Allowance)	$ 5,000		
			Subtotal Item 6	$ 1,411,297
7.0	**Total Cost, Items 4, 5, 6**			$2,858,614

THE CITY OF WICHITA Wichita, Kansas
Department of Public Works

PRELIMINARY ESTIMATES
FOR CITY COUNCIL SEPTEMBER 13, 2011

a. 2010 CIP Arterial Repair Phase 2; Hillside, Lincoln to Lewis (Hillside, Lincoln to Lewis) (472-84897a/707016/620552/636234/113116/210481/660669/770622) Traffic to be maintained during construction using flagpersons and barricades. (District I,II,III) - $378,212.50

City of Wichita
City Council Meeting
September 13, 2011

TO: Mayor and City Council

SUBJECT: Petition to improve the Big Slough South at the Kansas Turnpike (south of 47th Street South, west of the I-135 Freeway) (District III)

INITIATED BY: Department of Public Works & Utilities

AGENDA: Consent

Recommendation: Approve the new petition.

Background: On June 14, 2011, the City Council approved a petition to improve the drainage of the Big Slough South at the Kansas Turnpike. An attempt to award a construction contract within the budget set by the petition was not successful. The developer has submitted a new petition with an increased budget. The signature on the petition represents 100% of the improvement district.

Analysis: The improvement will consist of replacing the existing three-cell (10'x8') box culvert with a three-cell (16'x12') box culvert at a lower elevation. This increased capacity will allow proper conveyance of the 1% chance storm event, lower flood elevations and remove approximately 150 homes from the floodplain, upstream of the structure. Recent improvements downstream of this location will accommodate the larger capacity of the new bridge. The project is planned to begin next spring and be completed next summer.

Financial Considerations: The existing budget totals $2,000,000 with $1,600,000 paid by General Obligation Bonds and $400,000 by special assessments. The new petition provides for a budget of $2,500,000, with $1,600,000 paid by General Obligation Bonds and $900,000 paid by special assessments. The City share of the project cost is included in the Adopted 2009-2018 Capital Improvement Program.

Goal Impact: This project addresses the Efficient Infrastructure goal by providing drainage improvements for a new commercial development and an existing residential area.

Legal Considerations: The Law Department has approved the petition and resolution as to legal form.

Recommendation/Action: It is recommended that the City Council approve the petition, adopt the resolution and authorize the necessary signatures.

Attachments: CIP sheet, petition and resolution.

CAPITAL IMPROVEMENT

PROJECT AUTHORIZATION

CITY OF WICHITA

USE
To Initiate Project
To Revise Project X

1. Prepare in triplicate
2. Send original & 2 copies to budget
3. City Manager to sign all copies.
4. File original w/ initiating resolution in City Clerk.
5. Return 2nd copy to initiating department
6. Send 3rd copy to Controller.

1. Initiating Department	2. Initiating Division	3. Date	4. Project Description & Location
Public Works & Utilities	Eng & Arch	8/23/2011	Storm Water Drain for area south of 47th St. South, west of I-135

5. CIP Project Number	6. Accounting Number	7. CIP Project Date (Year)	8. Approved by WCC Date
NI-200424		2011	

9. Estimated Start Date	10. Estimated Completion Date	11. Project Revised
As Required	As Required	

12. Project Cost Estimate

ITEM	GO	SA	OTHER*	TOTAL
Right of Way				
Bridge & Culvert				
Paving, grading, & const.				
Drainage	$1,600,000	$900,000		$2,500,000
Sanitary Sewer				
Sidewalk				
Water				
Multi-Use Path				
Totals	$1,600,000	$900,000		$2,500,000
Total CIP Amount Budgeted				
Total Prelim. Estimate				

12A.

	Yes	No
Platting Required		
Lot Split		
Petition	X	
Ordered by WCC		

Remarks:

100% Petition

*Storm Water Utility

468-84630

13. Recommendation: Approve the petition and resolution

Division Head	Department Head	Budget Officer	City Manager
		Date	Date

132019

First Published in the Wichita Eagle on September 16, 2011

RESOLUTION NO. 11-217

RESOLUTION OF FINDINGS OF ADVISABILITY AND RESOLUTION AUTHORIZING IMPROVING STORM WATER DRAIN NO. 361 (SOUTH OF 47TH ST. SOUTH, WEST OF I-135 FREEWAY) 468-84636 IN THE CITY OF WICHITA, KANSAS, PURSUANT TO FINDINGS OF ADVISABILITY MADE BY THE GOVERNING BODY OF THE CITY OF WICHITA, KANSAS.

BE IT RESOLVED BY THE GOVERNING BODY OF THE CITY OF WICHITA, KANSAS, THAT THE FOLLOWING FINDINGS AS TO THE ADVISABILITY OF IMPROVING STORM WATER DRAIN NO. 361 (SOUTH OF 47TH ST. SOUTH, WEST OF I-135 FREEWAY) 468-84636 IN THE CITY OF WICHITA, KANSAS, ARE HEREBY MADE TO-WIT:

SECTION 1. That Resolution No. 09-304 adopted on September 15, 2009 and Resolution No. 11-141 adopted on June 14, 2011 are hereby rescinded.

SECTION 2. That it is necessary and in the public interest to improve Storm Water Drain No. 361 (south of 47th St. South, west of I-135 Freeway) 468-84636.

SECTION 3. That the cost of said improvements provided for in Section 2 hereof is estimated to be Two Million Five Hundred Thousand Dollars ($2,500,000), exclusive of the cost of interest on borrowed money, with 36 percent payable by the improvement district and 64 percent payable by the City of Wichita at large. Said estimated cost as above set forth is hereby increased at the pro-rata rate of 1 percent per month from and after October 1, 2011, exclusive of the costs of temporary financing.

SECTION 4. That all costs of said improvements attributable to the improvement district, when ascertained, shall be assessed against the land lying within the improvement district described as follows:

A Tract of land in the North Half of Section 21, Township 28 South, Range 1 East of the Sixth Principal Meridian, Sedgwick County, Kansas.

Commencing at the Northwest Corner of the Northwest Quarter of Section 21, Township 28 South, Range 1 East of the Sixth Principal Meridian, Sedgwick County, Kansas, thence along an assumed bearing of N89° 31' 13"E on the North line of said Northwest Quarter for 2295.74 feet to a point, thence S0° 28' 47"E for 155.50 feet to the point of beginning on the Kansas Department of Transportation right-of-way line as described in the Quit Claim Deed recorded as DOC.#/FLM-PG: 29162038, thence S19°28'47"E a distance of 393.37 feet to a point on the Kansas Department of Transportation right-of-way line as described in the Deed recorded in Deed Book 1351 at page 253, thence S 6°26'53"E a distance of 129.68 feet, thence S19°28'47"E a distance of 1465.35 feet to a point on the right-of-way line of the Kansas Turnpike Authority as described in condemnation case A-55279, thence along said Kansas Turnpike Authority right-of-way line S8°42'58"W a distance of 579.10 feet to a point on the South line of the Northeast Quarter of Section 21, Township 28 South, Range 1 East, thence S88°50'51"W along the South line of said Northeast Quarter a distance of 176.00 feet to the Southwest corner of said Northeast Quarter, thence S88°50'53"W along the South line of the Northwest Quarter of Section 21, Township 28 South, Range 1 East a distance of 792.71 feet to a point on the East line of the Riverside Drainage District easement as recorded in Deed Book 432 at page 162, thence N2°01'29"E along said Riverside Drainage District easement a distance of 263.56 feet to a point of curvature, thence continuing along the Riverside Drainage District easement along a curve to the left, having a radius of 2084.33 feet a delta angle of 10°01'53", for an arc distance of 364.93 feet to a point of tangency, thence continuing along said Riverside Drainage District easement N8°00'24"W a distance of 699.38 feet to a point, thence continuing along said Riverside Drainage District easement N6°12'07"W a distance of 1154.42 feet to a point on the Kansas Department of Transportation right-of-way line as described in the Quit Claim Deed recorded as DOC.#/FLM-PG: 29162038, thence along said Kansas Department of Transportation right-of-way line bearing N89°31'13"E a distance of 653.73 feet to the point of beginning. (To be platted as Lots 1-7, Block 1, Southfork Commercial Addition, Wichita, Sedgwick County, Kansas.)

Said tract contains 50.389 acres, more or less

SECTION 5. That the method of apportioning all costs of said improvements attributable to the improvement district to the owners of land liable for assessment therefore shall be on a fractional basis:

That the method of assessment of all costs of the improvement for which the improvement district shall be liable shall be on a fractional basis: That the afore-described property shall pay 100/100 of the improvement cost.

Where the ownership of a single lot is or may be divided into two or more parcels, the assessment to the lot so divided shall be assessed to each ownership or parcel on a square foot basis.

SECTION 6. That payment of said assessments may indefinitely be deferred as against those property owners eligible for such deferral available through the Special Assessment Deferral Program.

SECTION 7. That the City Engineer shall prepare plans and specifications for said improvement and a preliminary estimate of cost therefore, which plans, specifications, and a preliminary estimate of cost shall be presented to this Body for its approval.

SECTION 8. Whereas, the Governing Body of the City, upon examination thereof, considered, found and determined the Petition to be sufficient, having been signed by the owners of record, whether resident or not, of more than Fifty Percent (50%) of the property liable for assessment for the costs of the improvement requested thereby; the advisability of the improvements set forth above is hereby established as authorized by K.S.A. 12-6a01 et seq. as amended.

SECTION 9. Be it further resolved that the above-described improvement is hereby authorized and declared to be necessary in accordance with the findings of the Governing Body as set out in this resolution.

SECTION 10. That the City Clerk shall make proper publication of this resolution, which shall be published once in the official City paper and which shall be effective from and after said publication.

PASSED by the governing body of the City of Wichita, Kansas, this 13th day of September 2011.

_____
CARL BREWER, MAYOR

ATTEST:

_____
KAREN SUBLETT, CITY CLERK

(SEAL)

APPROVED AS TO FORM:

_____
GARY E. REBENSTORF
DIRECTOR OF LAW

RECEIVED
AUG 08 '11
CITY CLERK OFFICE

DRAINAGE PETITION
(Revised 08/05/11)

To the Mayor and City Council
Wichita, Kansas

Dear Council Members:

1. We, the undersigned owners of record as below designated, of Lots, Parcels, and Tracts of real property described as follows:

A Tract of land in the North Half of Section 21, Township 28 South, Range 1 East of the Sixth Principal Meridian, Sedgwick County, Kansas.
Commencing at the Northwest Corner of the Northwest Quarter of Section 21, Township 28 South, Range 1 East of the Sixth Principal Meridian, Sedgwick County, Kansas, thence along an assumed bearing of N89° 31' 13"E on the North line of said Northwest Quarter for 2295.74 feet to a point, thence S0° 28' 47"E for 155.50 feet to the point of beginning on the Kansas Department of Transportation right-of-way line as described in the Quit Claim Deed recorded as DOC.#/FLM-PG: 29162038, thence S19°28'47"E a distance of 393.37 feet to a point on the Kansas Department of Transportation right-of-way line as described in the Deed recorded in Deed Book 1351 at page 253, thence S 6°26'53"E a distance of 129.68 feet, thence S19°28'47"E a distance of 1465.35 feet to a point on the right-of-way line of the Kansas Turnpike Authority as described in condemnation case A-55279, thence along said Kansas Turnpike Authority right-of-way line S8°42'58"W a distance of 579.10 feet to a point on the South line of the Northeast Quarter of Section 21, Township 28 South, Range 1 East, thence S88°50'51"W along the South line of said Northeast Quarter a distance of 176.00 feet to the Southwest corner of said Northeast Quarter, thence S88°50'53"W along the South line of the Northwest Quarter of Section 21, Township 28 South, Range 1 East a distance of 792.71 feet to a point on the East line of the Riverside Drainage District easement as recorded in Deed Book 432 at page 162, thence N2°01'29"E along said Riverside Drainage District easement a distance of 263.56 feet to a point of curvature, thence continuing along the Riverside Drainage District easement along a curve to the left, having a radius of 2084.33 feet a delta angle of 10°01'53", for an arc distance of 364.93 feet to a point of tangency, thence continuing along said Riverside Drainage District easement N8°00'24"W a distance of 699.38 feet to a point, thence continuing along said Riverside Drainage District easement N6°12'07"W a distance of 1154.42 feet to a point on the Kansas Department of Transportation right-of-way line as described in the Quit Claim Deed recorded as DOC.#/FLM-PG: 29162038, thence along said Kansas Department of Transportation right-of-way line bearing N89°31'13"E a distance of 653.73 feet to the point of beginning. (To be platted as Southfork Commercial Addition, Wichita, Sedgwick County, Kansas.)

Said tract contains 50.389 acres, more or less

do hereby petition pursuant to the provisions of K.S.A. 12-6a01 et seq., as follows:

SWD 361

468-84636

(a) That a contract be authorized for the necessary permitting, design and preparation of construction documents, and the construction of the drainage improvements to the drainage structure on the Big Slough South under the Kansas Turnpike Authority to serve the area described above, according to plans and specifications to be furnished by the City Engineer of the City of Wichita, Kansas.

(b) That the estimated and probable cost of the permitting and design of the foregoing improvements being TWO MILLION FIVE HUNDRED THOUSAND DOLLARS ($2,500,000), exclusive of the cost of interest on borrowed money with 36 percent payable by the improvement district and 64 percent payable by the City of Wichita at large. Said estimated cost as above set forth may be increased to include temporary interest or finance costs incurred during the course of design, construction, and permitting of the project, and also may be increased at the pro rata rate of 1 percent per month from and after October 1, 2011.

(c) That the land or area above described be constituted as an improvement district against which shall be assessed 100 percent of the total actual cost of the improvement for which the improvement district is liable.

If this improvement is abandoned, altered and/or constructed privately in part or whole that precludes building this improvement under the authority of this petition, any costs that the City of Wichita incurs shall be assessed to the property described above in accordance with the terms of the petition. In addition, if the improvement is abandoned at any state during the design and/or construction of the improvement or if it is necessary for the City of Wichita to redesign, repair or reconstruct the improvement after its initial design and/or construction because the design or construction does not meet the requirements of the City, then such costs associated with the redesign, repair or reconstruction of said improvement shall be assessed to the property described above in accordance with the terms of this petition.

(d) That the method of assessment of all costs of the improvement for which the improvement district shall be liable shall be on a fractional basis:

That the afore-described property shall pay 100/100 of the improvement district cost on a per square foot basis.

Where the ownership of Tract is divided into two or more parcels, the assessment to the lot so divided shall be assessed to each owner or parcel within such subdivided tract on a per square foot basis.

2. It is requested that the improvement hereby petitioned be made without notice and

hearing, which, but for this request, would be required by K.S.A. 12-6a04.

3. That names may not be withdrawn from this petition by the signers thereof after the Governing Body commences consideration of the petition or later than seven (7) days after filing, whichever occurs first.

4. That when this petition has been filed with the City Clerk and it has been certified that the signatures thereon are according to the records of the Register of Deeds of Sedgwick County, Kansas, the petition may be found sufficient if signed by either (1) a majority of the resident owners of record of property liable for assessment under the proposal, or (2) the resident owners of record of more than one-half of the area liable for assessment under the proposal, or (3) the owners of record (whether resident or not) of more than one-half of the area liable for assessment under the proposal. The Governing Body is requested to proceed in the manner provided by statute to the end that the petitioned improvements may be expeditiously completed and placed in use if and when such improvements are necessary to serve any building that may be constructed on the real property after the date on this petition.

WITNESS our signatures attached with respect to each of which is indicated the property owned and the date of signing.

LEGAL DESCRIPTION	SIGNATURE	DATE
A Tract of land in the North Half of Section 21, Township 28 South, Range 1 East of the Sixth Principal Meridian, Sedgwick County, Kansas. Commencing at the Northwest Corner of the Northwest Quarter of Section 21, Township 28 South, Range 1 East of the Sixth Principal Meridian, Sedgwick County, Kansas, thence along an assumed bearing of N89° 31' 13"E on the North line of said Northwest Quarter for 2295.74 feet to a point, thence S0° 28' 47"E for 155.50 feet to the point of beginning on the Kansas Department of Transportation right-of-way line as described in the Quit Claim Deed recorded as DOC.#/FLM-PG: 29162038, thence S19°28'47"E a distance of 393.37 feet to a point on the Kansas Department of Transportation right-of-way line as described in the Deed recorded in Deed Book 1351 at page 253, thence S 6°26'53"E a distance of 129.68 feet, thence S19°28'47"E a distance of 1465.35 feet to a point on the right-of-way line of the Kansas Turnpike Authority as described in condemnation case A-55279, thence along said Kansas Turnpike Authority right-of-way line S8°42'58"W a distance of 579.10 feet to a point on the South line of the Northeast Quarter of Section 21, Township 28 South, Range 1 East, thence S88°50'51"W along the South line of said Northeast Quarter a distance of 176.00 feet to the Southwest corner of said Northeast Quarter, thence S88°50'53"W along the South line of the Northwest Quarter of Section 21, Township 28 South, Range 1 East a distance of 792.71 feet to a point on the East line of the Riverside Drainage District easement as recorded in Deed Book 432 at page 162, thence N2°01'29"E along said Riverside Drainage District easement a distance of 263.56 feet to a point of curvature, thence continuing along the Riverside Drainage District easement along a curve to the left, having a radius of 2084.33 feet a delta angle of 10°01'53", for an arc distance of 364.93 feet to a point of tangency, thence continuing along said Riverside Drainage District easement N8°00'24"W a distance of 699.38 feet to a point, thence continuing along said Riverside Drainage District easement N6°12'07"W a distance of 1154.42 feet to a point on the Kansas Department of Transportation right-of-way line as described in the Quit Claim Deed recorded as DOC.#/FLM-PG: 29162038, thence along said Kansas Department of Transportation right-of-way line bearing N89°31'13"E a distance of 653.73 feet to the point of beginning. (To be platted as Lots 1-7, Block 1, Southfork Commercial Addition, Wichita, Sedgwick County, Kansas.) Said tract contains 50.389 acres, more or less.		8-5-11

AFFIDAVIT

The undersigned, being first duly sworn on his oath, states: That he circulated the attached petition and that the signatures thereon are the genuine signatures of the persons they purport to be to the best of his knowledge and belief, being signed either in the presence of the undersigned or in the presence of one of the resident owners whose signature appears on the petition.

Tim Austin, PE
Poe & Associates, Inc.
5940 E. Central; Suite 200
Wichita, KS 67208
(316) 685-4114

Sworn to and subscribed before me August 8 day of, 2011.

Deborah A Indlock
Deputy City Clerk

City of Wichita
City Council Meeting
September 13, 2011

TO: Mayor and City Council

SUBJECT: Petition to construct drainage improvements in an area north of Kellogg, east of Maize (District V)

INITIATED BY: Department of Public Works & Utilities

AGENDA: Consent

Recommendation: Approve the new petition.

Background: On September 1, 2009, the City Council approved a petition for drainage improvements in an area north of Kellogg, east of Maize. The design process for the project and a previous drainage project in the area has revealed unanticipated subsurface conditions that will significantly increase the cost of the project. The developer has submitted a new petition with an increased budget. The petition has been signed by two owners representing 100% of the improvement district.

Analysis: The project will provide drainage improvements in an area near Cowskin Creek, north of Kellogg, to facilitate the development of a large new commercial complex.

Financial Considerations: The existing project budget totals $120,000. The new petition budget is $834,000. The funding source is special assessments.

Goal Impact: This project addresses the Efficient Infrastructure goal by providing for the construction of drainage improvements required for new commercial development.

Legal Considerations: The Law Department has approved the petition and resolution as to legal form.

Recommendations/Actions: It is recommended that the City Council approve the petition, adopt the resolution and authorize the necessary signatures.

Attachments: CIP sheet, petition and resolution.

CAPITAL IMPROVEMENT

PROJECT AUTHORIZATION

CITY OF WICHITA

USE

To Initiate Project

To Revise Project X

1. Prepare in triplicate
2. Send original & 2 copies to budget
3. City Manager to sign all copies.
4. File original w/ initiating resolution in City Clerk.
5. Return 2nd copy to initiating department
6. Send 3rd copy to Controller.

1. Initiating Department	2. Initiating Division	3. Date	4. Project Description & Location
Public Works & Utilities	Eng & Arch	8/23/2011	Storm Water Drain for area north of Kellogg, east of Maize

5. CIP Project Number	6. Accounting Number	7. CIP Project Date (Year)	8. Approved by WCC Date
NI-200424		2011	

9. Estimated Start Date	10. Estimated Completion Date	11. Project Revised
As Required	As Required	

12. Project Cost Estimate

ITEM	GO	SA	OTHER*	TOTAL
Right of Way				
Bridge & Culvert				
Paving, grading, & const.				
Drainage		$834,000		$834,000
Sanitary Sewer				
Sidewalk				
Water				
Multi-Use Path				
Totals		$834,000		$834,000
Total CIP Amount Budgeted				
Total Prelim. Estimate				

12A.

	Yes	No
Platting Required		
Lot Split		
Petition	X	
Ordered by WCC		

Remarks:

100% Petition

*Storm Water Utility

SWD No. 380

468-84641

13. Recommendation: Approve the petition and resolution

Division Head	Department Head	Budget Officer	City Manager
		Date	Date

132019

First Published in the Wichita Eagle on September 16, 2011

RESOLUTION NO. 11-218

RESOLUTION OF FINDINGS OF ADVISABILITY AND RESOLUTION AUTHORIZING IMPROVING STORM WATER DRAIN NO. 380 (NORTH OF KELLOGG, EAST OF MAIZE) 468-84631 IN THE CITY OF WICHITA, KANSAS, PURSUANT TO FINDINGS OF ADVISABILITY MADE BY THE GOVERNING BODY OF THE CITY OF WICHITA, KANSAS.

BE IT RESOLVED BY THE GOVERNING BODY OF THE CITY OF WICHITA, KANSAS, THAT THE FOLLOWING FINDINGS AS TO THE ADVISABILITY OF IMPROVING STORM WATER DRAIN NO. 380 (NORTH OF KELLOGG, EAST OF MAIZE) 468-84631 IN THE CITY OF WICHITA, KANSAS, ARE HEREBY MADE TO-WIT:

SECTION 1. That Resolution No. 09-292 adopted on September 1, 2009 is hereby rescinded.

SECTION 2. That it is necessary and in the public interest to improve Storm Water Drain No. 380 (north of Kellogg, east of Maize) 468-84631.

SECTION 3. That the cost of said improvements provided for in Section 2 hereof is estimated to be Eight Hundred Thirty-Four Thousand Dollars ($834,000) exclusive of the cost of interest on borrowed money, with 100 percent payable by the improvement district. Said estimated cost as above set forth is hereby increased at the pro-rata rate of 1 percent per month from and after October 1, 2011, exclusive of the costs of temporary financing.

SECTION 4. That all costs of said improvements attributable to the improvement district, when ascertained, shall be assessed against the land lying within the improvement district described as follows:

EXIBIT A

PARCEL 1

Lots 1, 2 and 3, Block A, Maize 54 Addition, Wichita, Sedgwick County, Kansas.

Said parcel contains 524,184 square feet more or less.

PARCEL 2

Part of the SW1/4 Section 29, Township 27 South, Range 1 West of the 6th P.M. Sedgwick County, Kansas described as Beginning at the N.E. corner of Lot 1, Block A, Kansas State Bank Addition, Wichita, Sedgwick County, Kansas being a common corner of the S.E. corner of Lot 8, Verda Vista, Sedgwick County, Kansas; thence 88°21’15”E along the common line as extended East, 659.8 feet to a point on the West line of a Ponding and Overland Flowage Easement filed on DOC#/FLM-PG: 28652650; thence N12°55’02”W along said Easement, 59.72 feet; thence continuing along said Easement N36°46’09”W, 96.11 feet; thence N51°17’57”W, 146.12 feet; thence N35°39’24”W, 95.48 feet; thence N16°26’04”W, 101.68 feet; thence N11°19’07”W, 120.39 feet along the West line of a Ponding and Overland Flowage Easement filed on DOC#/FLM-PG: 28652650, and DOC#/FLM-PG: 28652651; thence continuing N22°33’08”W, along said DOC#/FLM-PG: 28652651, 179.57 feet; thence N16°20’54”W, 124.1 feet; thence N25°52’23”E, 38.55 feet more or less to a point on the South line of the North 40 acres of the SW1/4 of said Section 29; thence S88°20’41”W along the South line of the North 40 acres of said SW1/4, 299.04 feet to a point 270 feet East of the West line of said SW1/4, said point being 30 feet North of the N.E. corner of Lot 1, Verda Vista Sedgwick County, Kansas; thence S01°18’15”E along the East line of said Verda Vista, 850 feet to the point of beginning.

And Lots 5 and 7, Block A, Verda Vista Addition, Wichita, Sedgwick County, Kansas.

Said parcel contains 408,615 square feet more or less.

SECTION 5. That the method of apportioning all costs of said improvements attributable to the improvement district to the owners of land liable for assessment therefore shall be on a **fractional** basis:

> That the method of assessment of all costs of the improvement for which the improvement district shall be liable shall be on a fractional basis: Lot 1, Block A, MAIZE 54 ADDITION shall pay 102/1000; Lot 2, Block A, MAIZE 54 ADDITION shall pay 52/1000; Lot 3, Block A, MAIZE 54 ADDITION shall pay 36/1000 and PARCEL 2 as described in the attachment Exhibit A shall pay 810/1000.

Where the ownership of Tract is divided into two or more parcels, the assessment to the lot so divided shall be assessed to each owner or parcel within such subdivided tract on a square foot basis.

SECTION 6. That payment of said assessments may indefinitely be deferred as against those property owners eligible for such deferral available through the Special Assessment Deferral Program.

SECTION 7. That the City Engineer shall prepare plans and specifications for said improvement and a preliminary estimate of cost therefore, which plans, specifications, and a preliminary estimate of cost shall be presented to this Body for its approval.

SECTION 8. Whereas, the Governing Body of the City, upon examination thereof, considered, found and determined the Petition to be sufficient, having been signed by the owners of record, whether resident or not, of more than Fifty Percent (50%) of the property liable for assessment for the costs of the improvement requested
thereby; the advisability of the improvements set forth above is hereby established as authorized by K.S.A. 12-6a01 et seq. as amended.

SECTION 9. Be it further resolved that the above-described improvement is hereby authorized and declared to be necessary in accordance with the findings of the Governing Body as set out in this resolution.

SECTION 10. That the City Clerk shall make proper publication of this resolution, which shall be published once in the official City paper and which shall be effective from and after said publication.

PASSED by the governing body of the City of Wichita, Kansas, this 13th day of September 2011.

_____
CARL BREWER, MAYOR

ATTEST:

_____
KAREN SUBLETT, CITY CLERK

(SEAL)

APPROVED AS TO FORM:

_____
GARY E. REBENSTORF
DIRECTOR OF LAW

RECEIVED

AUG 02 '11

CITY CLERK OFFICE

Replaces 468-84631

DRAINAGE PETITION

To the Mayor and City Council
Wichita, Kansas

Dear Council Members:

1. We, the undersigned owners of record as below designated, of Lots, Parcels, and Tracts of real property described as follows:

See Exhibit "A" attached hereto

do hereby petition pursuant to the provisions of K.S.A. 12-6a01 et seq., as follows:

SWD 468-84631

(a) That drainage improvements including mass grading, storm sewer piping and structures, landscaping, seeding, erosion control and related appurtenances be constructed on and/or to the Cowskin Creek to serve the area described above, according to plans and specifications to be furnished by the City Engineer of the City of Wichita, Kansas.

SWD 380 WEIR

(b) That the estimated and probable cost of the foregoing improvements being EIGHT HUNDRED THIRTY FOUR HOUSAND DOLLARS ($834,000), with 100 percent payable by the improvement district. Said estimated cost as above set forth may be increased to include temporary interest or finance costs incurred during the course of design and construction of the project, and also may be increased at the pro rata rate of 1 percent per month from and after October 1, 2011.

(North of Kellogg, East of Maize)

(c) That the land or area above described be constituted as an improvement district against which shall be assessed 100 percent of the total actual cost of the improvement for which the improvement district is liable.

If this improvement: (i) is abandoned, altered and/or constructed privately in part or whole that precludes building this improvement under the authority of this petition, or (ii) is abandoned at any state during the design and/or construction of the improvement, or (iii) requires the redesign, repair or reconstruction by the City of Wichita after its initial design or construction because the design or construction does not meet the requirements of the City; then in any of the foregoing events the Developers' Agreement shall control."

(d) That the method of assessment of all costs of the improvement for which the improvement district shall be liable shall be on a fractional basis:

Lot 1, Block A, Maize 54 Addition shall pay 102/1000

Lot 2, Block A, Maize 54 Addition shall pay 52/1000

Lot 3, Block A, Maize 54 Addition shall pay 36/1000

Parcel 2 as described in the attached Exhibit A shall pay 810/1000

Where the ownership of Tract is divided into two or more parcels, the assessment to the lot so divided shall be assessed to each owner or parcel within such subdivided tract on a square foot basis.

2. It is requested that the improvement hereby petitioned be made without notice and hearing, which, but for this request, would be required by K.S.A. 12-6a04.

3. That names may not be withdrawn from this petition by the signers thereof after the Governing Body commences consideration of the petition or later than seven (7) days after filing, whichever occurs first.

4. That when this petition has been filed with the City Clerk and it has been certified that the signatures thereon are according to the records of the Register of Deeds of Sedgwick County, Kansas, the petition may be found sufficient if signed by either (1) a majority of the resident owners of record of property liable for assessment under the proposal, or (2) the resident owners of record of more than one-half of the area liable for assessment under the proposal, or (3) the owners of record (whether resident or not) of more than one-half of the area liable for assessment under the proposal. The Governing Body is requested to proceed in the manner provided by statute to the end that the petitioned improvements may be expeditiously completed and placed in use if and when such improvements are necessary to serve any building that may be constructed on the real property after the date on this petition.

WITNESS our signatures attached with respect to each of which is indicated the property owned and the date of signing.

LEGAL DESCRIPTION	SIGNATURE	DATE
PARCEL 1 (see attached Exhibit A for complete legal description)	Maize 54, LLC By:	7-29-11
PARCEL 2 (see attached Exhibit A for complete legal description)	Maize 54, LLC By: for Lots 5 & 7, Block A, Verda Vista Addition	7-29-11
	Wichita Towers, LLC By: Sarah E. Floyd	7-29-11

EXIBIT A

PARCEL 1

Lots 1, 2 and 3, Block A, Maize 54 Addition, Wichita, Sedgwick County, Kansas.

Said parcel contains 524,184 square feet more or less.

PARCEL 2

Part of the SW1/4 Section 29, Township 27 South, Range 1 West of the 6th P.M. Sedgwick County, Kansas described as Beginning at the N.E. corner of Lot 1, Block A, Kansas State Bank Addition, Wichita, Sedgwick County, Kansas being a common corner of the S.E. corner of Lot 8, Verda Vista, Sedgwick County, Kansas; thence 88°21'15"E along the common line as extended East, 659.8 feet to a point on the West line of a Ponding and Overland Flowage Easement filed on DOC#/FLM-PG: 28652650; thence N12°55'02"W along said Easement, 59.72 feet; thence continuing along said Easement N36°46'09"W, 96.11 feet; thence N51°17'57"W, 146.12 feet; thence N35°39'24"W, 95.48 feet; thence N16°26'04"W, 101.68 feet; thence N11°19'07"W, 120.39 feet along the West line of a Ponding and Overland Flowage Easement filed on DOC#/FLM-PG: 28652650, and DOC#/FLM-PG: 28652651; thence continuing N22°33'08"W, along said DOC#/FLM-PG: 28652651, 179.57 feet; thence N16°20'54"W, 124.1 feet; thence N25°52'23"E, 38.55 feet more or less to a point on the South line of the North 40 acres of the SW1/4 of said Section 29; thence S88°20'41"W along the South line of the North 40 acres of said SW1/4, 299.04 feet to a point 270 feet East of the West line of said SW1/4, said point being 30 feet North of the N.E. corner of Lot 1, Verda Vista Sedgwick County, Kansas; thence S01°18'15"E along the East line of said Verda Vista, 850 feet to the point of beginning.

And

Lots 5 and 7, Block A, Verda Vista Addition, Wichita, Sedgwick County, Kansas.

Said parcel contains 408,615 square feet more or less.

AFFIDAVIT

The undersigned, being first duly sworn on his oath, states: That he circulated the attached petition and that the signatures thereon are the genuine signatures of the persons they purport to be to the best of his knowledge and belief, being signed either in the presence of the undersigned or in the presence of one of the resident owners whose signature appears on the petition.

Name
Tim Austin

Poe & Associates, Inc.
5940 E. Central; Suite 200
Wichita, KS 67208
Address

(316) 685-4114
Telephone Number

Sworn to and subscribed before me 2nd day of ~~July,~~ August 2011.

THE CITY OF WICHITA SEDGWICK COUNTY KANSAS

Deputy City Clerk

Agenda Item No. II-6a

City of Wichita
City Council Meeting
September 13, 2011

TO: Mayor and City Council

SUBJECT: Community Events – Pace Race 5K Run/Walk (District VI)

INITIATED BY: Division of Arts & Cultural Services

AGENDA: Consent

Recommendation: Approve the request for temporary street closures.

Background: In accordance with the Community Events procedure, the event promoter Clark Ensz, Clark Ensz, Inc. is coordinating with City of Wichita staff, subject to final approval by the City Council.

Analysis: The following street closure request has been submitted:

Pace Race 5K Walk/Run, October 15, 2011 9:00 am – 10:00 am

- McLean Avenue, Central Avenue to Elm Street

The event promoter will arrange to remove the barricades as necessary to allow emergency vehicle access during the entire designated time period. The barricades will be removed immediately upon completion of the event.

Financial Consideration: The event promoter is responsible for all costs associated with the special event.

Goal Impact: Enhance the Quality of Life for citizens through special events and activities.

Legal Consideration: There are no legal considerations.

Recommendation/Actions: It is recommended that the City Council approve the request subject to; (1) Hiring off-duty certified law enforcement officers as required; (2) Obtaining barricades to close the streets in accordance with requirements of Police, Fire and Public Works Department; and (3) Securing a Certificate of Liability Insurance on file with the Community Events Coordinator.

Agenda Item No. II-6b

City of Wichita
City Council Meeting
September 13, 2011

TO: Mayor and City Council

SUBJECT: Community Events – Inspire Hope 8K and 1 Mile Run/Walk (District II)

INITIATED BY: Division of Arts & Cultural Services

AGENDA: Consent

Recommendation: Approve the request for temporary street closures.

Background: In accordance with the Community Events procedure, the event promoter Clark Ensz, Clark Ensz, Inc. is coordinating with City of Wichita staff, subject to final approval by the City Council.

Analysis: The following street closure request has been submitted:

Inspire Hope 8K and 1 Mile Run/Walk Sunday, October 23, 2011 2:00 pm – 4:30 pm

- Thirteenth Street, Webb Road to Beech Park entrance, curb side lane
- Webb Road, Thirteenth Street to Beech Park entrance, curb side lane

The event promoter will arrange to remove the barricades as necessary to allow emergency vehicle access during the entire designated time period. The barricades will be removed immediately upon completion of the event.

Financial Consideration: The event promoter is responsible for all costs associated with the special event.

Goal Impact: Enhance the Quality of Life for citizens through special events and activities.

Legal Consideration: There are no legal considerations.

Recommendation/Actions: It is recommended that the City Council approve the request subject to; (1) Hiring off-duty certified law enforcement officers as required; (2) Obtaining barricades to close the streets in accordance with requirements of Police, Fire and Public Works Department; and (3) Securing a Certificate of Liability Insurance on file with the Community Events Coordinator.

Agenda Item No. II-6c

City of Wichita
City Council Meeting
September 13, 2011

TO: Mayor and City Council

SUBJECT: Community Events – Monster Bash 5K Run/Walk (District I)

INITIATED BY: Division of Arts & Cultural Services

AGENDA: Consent

Recommendation: Approve the request for temporary street closures.

Background: In accordance with the Community Events procedure, the event promoter Clark Ensz, Clark Ensz, Inc. is coordinating with City of Wichita staff, subject to final approval by the City Council.

Analysis: The following street closure request has been submitted:

Monster Bash 5K Run/Walk, Saturday October 29, 2011 5:00 pm – 6:00 pm

- Thirty-second Street, Rushwood Street to Woodlawn Street

The event promoter will arrange to remove the barricades as necessary to allow emergency vehicle access during the entire designated time period. The barricades will be removed immediately upon completion of the event.

Financial Consideration: The event promoter is responsible for all costs associated with the special event.

Goal Impact: Enhance the Quality of Life for citizens through special events and activities.

Legal Consideration: There are no legal considerations.

Recommendation/Actions: It is recommended that the City Council approve the request subject to; (1) Hiring off-duty certified law enforcement officers as required; (2) Obtaining barricades to close the streets in accordance with requirements of Police, Fire and Public Works Department; and (3) Securing a Certificate of Liability Insurance on file with the Community Events Coordinator.

Agenda Item No. II-6d

City of Wichita
City Council Meeting
September 13, 2011

TO: Mayor and City Council

SUBJECT: Community Events –Girls on the Run Fall 5K (District II)

INITIATED BY: Division of Arts & Cultural Services

AGENDA: Consent

Recommendation: Approve the request for temporary street closures.

Background: In accordance with the Community Events procedure, the event promoter Clark Ensz, Clark Ensz, Inc. is coordinating with City of Wichita staff, subject to final approval by the City Council.

Analysis: The following street closure request has been submitted:

Girls on the Run Fall 5K, Sunday November 6, 2011 1:00 pm – 3:00 pm

- Douglas Avenue, West Parkway to Webb Road
- Linden Street, Douglas Avenue to Sequoia Street
- Sequoia Street, Linden Street to East Parkway
- East Parkway, Sequoia Street to Douglas Parkway
- Douglas Parkway, East Parkway to Cypress Street
- Cypress Street, Douglas Parkway to Sequoia Street

The event promoter will arrange to remove the barricades as necessary to allow emergency vehicle access during the entire designated time period. The barricades will be removed immediately upon completion of the event.

Financial Consideration: The event promoter is responsible for all costs associated with the special event.

Goal Impact: Enhance the Quality of Life for citizens through special events and activities.

Legal Consideration: There are no legal considerations.

Recommendation/Actions: It is recommended that the City Council approve the request subject to; (1) Hiring off-duty certified law enforcement officers as required; (2) Obtaining barricades to close the streets in accordance with requirements of Police, Fire and Public Works Department; and (3)Securing a Certificate of Liability Insurance on file with the Community Events Coordinator.

Agenda Item No. II-6e

City of Wichita
City Council Meeting
September 13, 2011

TO: Mayor and City Council

SUBJECT: Community Events – KS 150 Festival (District I and VI)

INITIATED BY: Division of Arts & Cultural Services

AGENDA: Consent

Recommendation: Approve the request for temporary street closure.

Background: In accordance with the Community Events procedure, the event promoter John D'Angleo, Manager of Arts & Cultural Services, City of Wichita is coordinating with staff, subject to final approval by the City Council.

Analysis: The following street closure request has been submitted:

KS 150 Festival October 8, 2011 8:00 am – 6:00 pm

- Douglas Avenue, Main Street to McLean Boulevard.

The event promoter will arrange to remove the barricades as necessary to allow emergency vehicle access during the entire designated time period. The barricades will be removed immediately upon completion of the event.

Financial Consideration: The event promoter is responsible for all costs associated with the special event.

Goal Impact: Enhance the Quality of Life for citizens through special events and activities.

Legal Consideration: None.

Recommendation/Actions: It is recommended that the City Council approve the request subject to; (1) Hiring off-duty certified law enforcement officers as required; and (2) Obtaining barricades to close the streets in accordance with requirements of Police, Fire and Public Works Department.

Agenda Item No. II-6f

City of Wichita
City Council Meeting
September 13, 2011

TO: Mayor and City Council

SUBJECT: Community Events – Wichita Play Day (District III)

INITIATED BY: Division of Arts & Cultural Services

AGENDA: Consent

Recommendation: Approve the request for temporary street closure.

Background: In accordance with the Community Events procedure, the event promoter Barbara McGuire, City of Wichita Department of Park and Recreation is coordinating with staff, subject to final approval by the City Council.

Analysis: The following street closure request has been submitted:

Wichita Play Day September 17, 2011 1:00 pm – 4:00 pm

- McLean Boulevard, 27th Street South to 30th Street South.

The event promoter will arrange to remove the barricades as necessary to allow emergency vehicle access during the entire designated time period. The barricades will be removed immediately upon completion of the event.

Financial Consideration: The event promoter is responsible for all costs associated with the special event.

Goal Impact: Enhance the Quality of Life for citizens through special events and activities.

Legal Consideration: None.

Recommendation/Actions: It is recommended that the City Council approve the request subject to; (1) Hiring off-duty certified law enforcement officers as required; and (2) Obtaining barricades to close the streets in accordance with requirements of Police, Fire and Public Works Department.

Agenda Item No. II-6g

City of Wichita
City Council Meeting
September 13, 2011

TO: Mayor and City Council

SUBJECT: Community Events – KEYN Oldies Concert Series Finale (District I)

INITIATED BY: Division of Arts & Cultural Services

AGENDA: Consent

Recommendation: Approve the request for temporary street closures.

Background: In accordance with the Community Events procedure, the event promoter Sharon Van Horn, Van Horn Productions is coordinating with staff, subject to final approval by the City Council.

Analysis: The following street closure request has been submitted:

KEYN Oldies Concert Series Finale September 30, 2011 6:00 pm – 10:00 pm

- Water Street, Dewey Street to Waterman Street.

The event promoter will arrange to remove the barricades as necessary to allow emergency vehicle access during the entire designated time period. The barricades will be removed immediately upon completion of the event.

Financial Consideration: The event promoter is responsible for all costs associated with the special event.

Goal Impact: Enhance the Quality of Life for citizens through special events and activities.

Legal Consideration: None.

Recommendation/Actions: It is recommended that the City Council approve the request subject to; (1) Hiring off-duty certified law enforcement officers as required; (2) Obtaining barricades to close the streets in accordance with requirements of Police, Fire and Public Works Department; and (3) Securing a Certificate of Liability Insurance on file with the Community Events Coordinator.

Agenda Item No. II-6h

City of Wichita
City Council Meeting
September 13, 2011

TO: Mayor and City Council

SUBJECT: Community Events – Prairie Fire Marathon Set-up (District I)

INITIATED BY: Division of Arts & Cultural Services

AGENDA: Consent

Recommendation: Approve the request for temporary street closure.

Background: In accordance with the Community Events Procedure, the event promoter Bob Hansen, President CEO, Greater Wichita Area Sports Commission is coordinating with area business owners and making arrangements with staff, subject to final approval by the City Council.

Analysis: The following street closure request has been submitted:

Prairie Fire Marathon Set-up October 8, 10:00 am – October 9, 2011 5:00 pm

- South Wichita Street, Waterman Street to Dewey Street

The event promoter will arrange to remove the barricades as necessary to allow emergency vehicle access during the entire designated time period. The barricades will be removed immediately upon completion of the event.

Financial Consideration: The event promoter is responsible for all costs associated with the special event.

Goal Impact: Enhance the Quality of Life for citizens through special events and activities.

Legal Consideration: There are no legal considerations.

Recommendation/Actions: It is recommended that the City Council approve the request subject to; (1) Hiring off-duty certified law enforcement officers as required; (2) Obtaining barricades to close the streets in accordance with requirements of Police, Fire and Public Works Department; and (3) Securing a Certificate of Liability Insurance on file with the Community Events Coordinator.

Agenda Item No. II-6i

City of Wichita
City Council Meeting
September 13, 2011

TO: Mayor and City Council

SUBJECT: Community Events – Prairie Fire Half Marathon (All Districts)

INITIATED BY: Division of Arts & Cultural Services

AGENDA: Consent

Recommendation: Approve the request for temporary street closures.

Background: In accordance with the Community Events Procedure, the event promoter Bob Hansen, President CEO, Greater Wichita Area Sports Commission is coordinating with area business owners and making arrangements with staff, subject to final approval by the City Council.

Analysis: The following street closure requests have been submitted:

Prairie Fire Half Marathon October 9, 2011 5:00 am – 5:00 pm

- Lewis/Waterman Street, Main Street to McLean Boulevard
- McLean Boulevard, Maple Avenue to Douglas Avenue
- Douglas Avenue, McLean Boulevard to Clifton Avenue
- Clifton Avenue, Douglas Avenue to Waterman Street
- Waterman Street, Clifton Street to Circle Drive
- Circle Drive, Waterman Street to Bluff Street
- Bluff Street, Circle Drive to Waterman Street
- Waterman Street, Bluff Street to Fountain Street
- Fountain Street, Waterman Street to Lewis Street
- Lewis Street, Fountain Street to Glendale Street
- Glendale Street, Lewis Street to Waterman Street
- Waterman Street, Glendale Street to Battin Street
- Battin Street, Waterman Street to Second Street
- Second Street, Battin Street to Dellrose Street
- Dellrose Street, Second Street to English Street
- English Street, Dellrose Street to Circle Drive
- Circle Drive, English Street to Oakland Street
- Oakland Street, Circle Drive to Clifton Drive
- Clifton Drive, Oakland Street to Douglas Avenue
- Douglas Avenue, Clifton Avenue to Mosley Avenue
- Mosley Avenue, Douglas Avenue to Second Street
- Second Street, Mosley Avenue to Mead Avenue
- Mead Avenue, Second Street to Moore Avenue
- Moore Avenue, Mead Avenue to Second Street
- Second Street, Moore Avenue to Emporia Avenue

- Emporia Avenue, Second Street to Pine Street
- Pine Street, Emporia Avenue to Santa Fe Street
- Santa Fe Street, Pine Street to the Via Christi entrance
- Via Christi entrance, Santa Fe to St. Francis
- St. Francis, Via Christi entrance to Murdock Avenue
- Murdock Avenue, St. Francis to Main Street
- Main Street, Murdock Avenue to Second Street
- Second Street, Main Street to Greenway Boulevard
- Greenway Boulevard, Second Street to Central Avenue
- Central Avenue, Greenway Boulevard to Seneca Street
- Seneca Street, Central Avenue to McLean Boulevard
- McLean Boulevard, Seneca Street to Lewis

The event promoter will arrange to remove the barricades as necessary to allow emergency vehicle access during the entire designated time period. The barricades will be removed immediately upon completion of the event.

Financial Consideration: The event promoter is responsible for all costs associated with the special event.

Goal Impact: Enhance the Quality of Life for citizens through special events and activities.

Legal Consideration: There are no legal considerations.

Recommendation/Actions: It is recommended that the City Council approve the request subject to; (1) Hiring off-duty certified law enforcement officers as required; (2) Obtaining barricades to close the streets in accordance with requirements of Police, Fire and Public Works Department; and (3) Securing a Certificate of Liability Insurance on file with the Community Events Coordinator.

Agenda Item No. II-6j

City of Wichita
City Council Meeting
September 13, 2011

TO: Mayor and City Council

SUBJECT: Community Events – Prairie Fire Marathon and Fun Run (All Districts)

INITIATED BY: Division of Arts & Cultural Services

AGENDA: Consent

Recommendation: Approve the request for temporary street closures.

Background: In accordance with the Community Events Procedure, the event promoter Bob Hansen, President CEO, Greater Wichita Area Sports Commission is coordinating with area business owners and making arrangements with staff, subject to final approval by the City Council.

Analysis: The following street closure requests have been submitted:

Prairie Fire Marathon October 9, 2011 5:00 am – 5:00 pm

- Lewis/Waterman Street, Main Street to McLean Boulevard
- McLean Boulevard, Maple Avenue to Douglas Avenue
- Douglas Avenue, McLean Boulevard to Clifton Avenue
- Clifton Avenue, Douglas Avenue to Waterman Street
- Waterman Street, Clifton Street to Bluff Street
- Bluff Street, Waterman Street to Fountain Street
- Fountain Street, Bluff Street to Lewis Street
- Lewis Street, Fountain Street to Glendale Street
- Glendale Street, Lewis Street to Waterman Street
- Waterman Street, Glendale Street to Edgemoor Street
- Edgemoor Street, Waterman Street to South Lexington Street
- South Lexington Street, Edgemoor Street to South Ridgecrest
- South Ridgecrest Street , South Lexington Street to Lynwood Street
- Lynwood Street, South Ridgecrest Street to Hampton Street
- Hampton Street, Lynwood Street to Lakeside Boulevard
- Lakeside Blvd., Hampton Street to South Mission Drive
- South Mission Drive, Lakeside Boulevard to Douglas Avenue
- Douglas Avenue, South Mission Drive to Rutland Street
- Rutland Street, Douglas Avenue to Huntington/Armour Avenue
- Huntington/Armour Avenue, Rutland Street to Central Avenue
- Central Avenue, Armour Avenue to North Doreen Street
- North Doreen Street, Central Avenue to Donegal Street
- Donegal Street, Doreen Street to Rock Road
- Rock Road, Donegal Street to Polo Drive
- Polo Drive, Rock Road to South Magill Street

- South Magill Street, Path to Talleyrand Street
- Talleyrand/10th Street, Path to Gretchen Lane
- Gretchen Lane, Tenth Street to Magill Street
- Magill Street, Gretchen Lane to Armour Drive
- Armour Drive, Magill Street to Eleventh Street
- Eleventh Street, Armour Drive to Whitfield Lane
- Whitfield Lane, Eleventh Street to Vincent Lane
- Vincent Lane, Whitfield Lane to Brookfield Lane/Brookfield Drive
- Brookfield Drive , Vincent Lane to Elm Street
- Elm Street, Brookfield Drive to Armour Drive/Armour Avenue
- Armour Avenue, Elm Street to Rockwood Road
- Rockwood Road, Armour Avenue to Hampton Road
- Hampton Road, Rockwood Road to East Norfolk Drive
- East Norfolk Drive, Hampton Road to Second Street
- Second Street, Norfolk Drive to Oliver Avenue
- Oliver Avenue, Second Street to Oakland Street
- Oakland Street, Oliver Street to Dellrose Street
- Dellrose Street, Oakland Street to English Street
- English Street, Dellrose Street to Clifton Avenue
- Clifton Avenue, English Street to Douglas Avenue
- Douglas Avenue, Clifton Avenue to Mosley Avenue
- Mosley Avenue, Douglas Avenue to Second Street
- Second Street, Mosley Avenue to Mead Avenue
- Mead Avenue, Second Street to Moore Avenue
- Moore Avenue, Mead Avenue to Second Street
- Second Street, Moore Avenue to Emporia Avenue
- Emporia Avenue, Second Street to Pine Street
- Pine Street, Emporia Avenue to Santa Fe Street
- Santa Fe Street, Pine Street to Murdock Avenue
- Murdock Avenue, Santa Fe Street to Main Street
- Main Street, Murdock Avenue to Eighth Street
- Eighth Street, Main Street to Back Bay Boulevard
- Back Bay Blvd., Eight Street to Ninth Street
- Ninth Street, Back Bay Blvd. to Oak Park Drive
- Oak Park Drive, Ninth Street to Forest Avenue
- Forest Avenue, Oak Park Drive to Eleventh Street
- Eleventh Street, Forest Avenue to Carlos Avenue
- Carlos Avenue, Forest Avenue to Twelfth Street
- Twelfth Street, Carlos Avenue to Oak Park Drive
- Oak Park Drive, Twelfth Street to Eleventh Street
- Eleventh Street, Oak Park Drive to Woodrow Avenue
- Woodrow Avenue, Eleventh Street to Twelfth Street
- Twelfth Street, Woodrow Avenue to Amidon Avenue
- Amidon Avenue, Twelfth Street to Sim Park Drive
- Sim Park Drive, Amidon Avenue to Museum Boulevard
- Museum Boulevard, Sim Park Drive to Stackman Drive
- Stackman Drive, Museum Boulevard to Murdock Avenue
- Murdock Avenue, Stackman Drive to Nims Avenue
- Nims Avenue, Murdock Avenue to West River Boulevard
- West River Boulevard, Nims Avenue to Murdock Avenue
- Murdock Avenue, West River Boulevard to Main Street

- Main Street, Murdock Avenue to Second Street
- Second Street, Main Street to Greenway Boulevard
- Greenway Boulevard, Second Street to Central Avenue
- Central Avenue, Greenway Boulevard to Seneca Street
- Seneca Street, Central Avenue to McLean Boulevard
- McLean Boulevard, Seneca Street to Lewis Street

The event promoter will arrange to remove the barricades as necessary to allow emergency vehicle access during the entire designated time period. The barricades will be removed immediately upon completion of the event.

Financial Consideration: The event promoter is responsible for all costs associated with the special event.

Goal Impact: Enhance the Quality of Life for citizens through special events and activities.

Legal Consideration: There are no legal considerations.

Recommendation/Actions: It is recommended that the City Council approve the request subject to; (1) Hiring off-duty certified law enforcement officers as required; (2) Obtaining barricades to close the streets in accordance with requirements of Police, Fire and Public Works Department; and (3) Securing a Certificate of Liability Insurance on file with the Community Events Coordinator.

Agenda Item No. II-7a

City of Wichita
City Council Meeting
September 13, 2011

TO: Mayor and City Council Members

SUBJECT: Providing Local Laser Printer Repair – Selection of Vendors

INITIATED BY: IT/IS

AGENDA: Consent

Recommendation: Approve the contract.

Background: IT/IS contracts with vendors to provide service on 425 laser printers (excluding the Lanier Multi-function Printers). These printers are used throughout the organization for various business functions. This outsourced service is necessary to keep printers in operating condition during their lifecycle.

Analysis: A competitive Request for Proposal (FP130038) was issued for "Laser Printer Maintenance" and three responses were received. The Staff Screening and Selection Committee reviewed and evaluated the proposals based on the criteria set forth in the Request for Proposal. The Committee determined that KK Office Solutions Inc. should be contracted for the Laser Printer Maintenance based on pricing, maximum response time of 4 hours, parts availability, past performance, current manufacturer's local vendor for warranty repair, current vendor for Lanier repairs and the fact it was a local company. The new contract will be for one year, with options to renew under the same terms and conditions for two additional one year periods by mutual agreement of both parties.

Financial Considerations: Laser Printer Maintenance costs are within departmental operating budgets, and the annual total is expected not to exceed $25,000.

Goal Impact: Improve technology efficiencies by providing expedient repair for all printers not under warranty. Provides for a more efficient work effort

Legal Considerations: The Law Department has reviewed and approved the contract as to form.

Recommendation/Action: It is recommended that the City Council approve the contract with KK Office Solutions Inc. and authorize the necessary signatures.

Attachment: Contract with KK Office Solutions Inc.

CONTRACT
for
LASER PRINTER MAINTENANCE
BP130075

THIS CONTRACT entered into this **13th day of September, 2011**, by and between the **CITY OF WICHITA, KANSAS**, a municipal corporation, hereinafter called "**CITY**", and **KK OFFICE SOLUTIONS INC.,** (Vendor Code Number 810155-001), whose principal office is at 3910 N Bridgeport Circle, Wichita, Kansas 67219, Telephone Number (316) 944-5464, hereinafter called "**VENDOR**".

WITNESSETH:

WHEREAS, the **CITY** has solicited proposals for **Laser Printer Maintenance** (Formal Proposal – FP130038) [Commodity Code Number 20477]; and

WHEREAS, VENDOR has submitted the proposal most beneficial to the **CITY** and is ready, willing, and able to provide the commodities and/or services required by the **CITY.**

NOW, THEREFORE, the parties hereto agree as follows:

1. **Scope of Services. VENDOR** shall provide to the **CITY** all those commodities and/or services specified in its response to Formal Proposal Number – FP130038, [Commodity Code Number 20477] which is incorporated herein by this reference the same as if it were fully set forth. The proposal package, including all specifications and plans provided by the City of Wichita as part of the proposal letting process for Formal Proposal FP130038, shall be considered a part of this contract and is incorporated by reference herein.

2. **Compensation. CITY** agrees to pay to **VENDOR** for **unit price** for **Laser Printer Maintenance** - Formal Proposal – FP130038 [Commodity Code Number 20477], for the Information Technology Department, IT/IS as per the proposal specifications and **VENDOR'S** proposal of June 24, 2011 and as approved by the City Council on **September 13, 2011.**

Laser Printer Maintenance -- annual total not to exceed $25,000

1. All printer repair replacement parts will be of the highest quality and of the best value that can be found.
2. On all "warranty" repairs for HP and Xerox printers, KK Office Solutions will not charge the City of Wichita for parts or labor.
3. Maximum response time will be 4 hours on any call in the city. This is from the time the call is made until the technician will be on our site. Hours are from 8-5 Monday thru Friday.
4. Printer repairs will be done on site (unless carry -in is requested) at a rate or $40 per hour (1 hour minimum) and with a 15-minute incremental charge after the first hour. There will be no trip charge if the printers are located within Sedgwick County.
5. Repair parts will be charged at a markup of 50% over landed cost.
6. KK Office Solutions will provide a monthly report with model, serial number and location of printers repaired, including date of service on repair and technician's note regarding condition and if attention is needed. This will be delivered within (10) days of the end of the month.
7. There is no return policy on any installed part. All other parts can be returned at no charge to the City of Wichita.

Billing Terms – Net Thirty (30) Days

3. **Term.** The term of this contract shall be from **September 13, 2011 through August 31, 2012**, with options to renew the contract under the same terms and conditions for two (2) successive one (1) year terms by mutual agreement of both parties. This contract is subject to cancellation by the city, at its discretion at any time within the original contract term or within any successive renewal, upon thirty (30) days written notice to **VENDOR.**

4. **Indemnification and Insurance.**

a. **VENDOR** shall save and hold the **CITY** harmless against all suits, claims, damages and losses for injuries to persons or property arising from or caused by errors, omissions or negligent acts of **VENDOR**, its officers, agents, servants, or employees, occurring in the performance of its services under this Contract, or arising from any defect in the materials or workmanship of any product provided in the performance of this Contract.

5. **Independent Contractor.** The relationship of the **VENDOR** to the **CITY** will be that of an independent contractor. No employee or agent of the **VENDOR** shall be considered an employee of the **CITY**.

6. **Compliance with Laws. VENDOR** shall comply with all laws, statutes and ordinances which may pertain to the providing of services under this Contract.

7. No Assignment. The services to be provided by the **VENDOR** under this Contract are personal and cannot be assigned, sublet or transferred without the specific written consent of the **CITY**.

8. Non-Discrimination. VENDOR shall comply with all applicable requirements of the City of Wichita Revised Non-Discrimination and Equal Employment /Affirmative Action Program Requirements Statement for Contracts or Agreements attached hereto as Exhibit A.

9. Third Party Rights. It is specifically agreed between the parties that it is not intended by any of the provisions of any part of this Contract to create the public or any member thereof a third-party beneficiary hereunder, or to authorize anyone not a party to this Contract to maintain a suit for damages pursuant to the terms or provisions of this Contract.

10. No Arbitration. The Contractor and the City shall not be obligated to resolve any claim or dispute related to the Contract by arbitration. Any reference to arbitration in proposal documents is deemed void.

11. Governing Law. This contract shall be interpreted according to the laws of the State of Kansas.

12. Representative's Authority to Contract. By signing this contract, the representative of the contractor or vendor represents the he or she is duly authorized by the contractor or vendor to execute this contract, and that the contractor or vendor has agreed to be bound by all its provisions.

IN WITNESS WHEREOF, the parties have set their hands the day and year first above written.

ATTEST:

Janis Edwards
Deputy City Clerk

CITY OF WICHITA, KANSAS

Carl G. Brewer
Mayor

APPROVED AS TO FORM:

Gary E. Rebenstorf
Director of Law

KK OFFICE SOLUTIONS INC.

Signature

MATTHEW BRANDT
Print Name

President / CEO
Title (President or Corporate Officer)

EXHIBIT A

REVISED NON-DISCRIMINATION AND EQUAL EMPLOYMENT OPPORTUNITY/AFFIRMATIVE ACTION PROGRAM REQUIREMENTS STATEMENT FOR CONTRACTS OR AGREEMENTS

During the term of this contract, the contractor or subcontractor, vendor or supplier of the City, by whatever term identified herein, shall comply with the following Non-Discrimination--Equal Employment Opportunity/Affirmative Action Program Requirements:

A. During the performance of this contract, the contractor, subcontractor, vendor or supplier of the City, or any of its agencies, shall comply with all the provisions of the Civil Rights Act of 1964, as amended: The Equal Employment Opportunity Act of 1972; Presidential Executive Orders 11246, 11375, 11131; Part 60 of Title 41 of the Code of Federal Regulations; the Age Discrimination in Employment Act of 1967; the Americans with Disabilities Act of 1990 and laws, regulations or amendments as may be promulgated thereunder.

B. Requirements of the State of Kansas:

1. The contractor shall observe the provisions of the Kansas Act against Discrimination (Kansas Statutes Annotated 44-1001, et seq.) and shall not discriminate against any person in the performance of work under the present contract because of race, religion, color, sex, disability, and age except where age is a bona fide occupational qualification, national origin or ancestry;

2. In all solicitations or advertisements for employees, the contractor shall include the phrase, "Equal Opportunity Employer", or a similar phrase to be approved by the "Kansas Human Rights Commission";

3. If the contractor fails to comply with the manner in which the contractor reports to the "Kansas Human Rights Commission" in accordance with the provisions of K.S.A. 1976 Supp. 44-1031, as amended, the contractor shall be deemed to have breached this contract and it may be canceled, terminated or suspended in whole or in part by the contracting agency;

4. If the contractor is found guilty of a violation of the Kansas Act against Discrimination under a decision or order of the "Kansas Human Rights Commission" which has become final, the contractor shall be deemed to have breached the present contract, and it may be canceled, terminated or suspended in whole or in part by the contracting agency;

5. The contractor shall include the provisions of Paragraphs 1 through 4 inclusive, of this Subsection B, in every subcontract or purchase so that such provisions will be binding upon such subcontractor or vendor.

C. Requirements of the City of Wichita, Kansas, relating to Non-Discrimination -- Equal Employment Opportunity/Affirmative Action Program Requirements:

1. The vendor, supplier, contractor or subcontractor shall practice Non-Discrimination -- Equal Employment Opportunity in all employment relations, including but not limited to employment, upgrading, demotion or transfer, recruitment or recruitment advertising, layoff or termination, rates of pay or other forms of compensation, and selection for training, including apprenticeship. The vendor, supplier, contractor or subcontractor shall submit an Equal Employment Opportunity or Affirmative Action Program, when required, to the Department of Finance of the City of Wichita, Kansas, in accordance with the guidelines established for review and evaluation;

2. The vendor, supplier, contractor or subcontractor will, in all solicitations or advertisements for employees placed by or on behalf of the vendor, supplier, contractor or subcontractor, state that all qualified applicants will receive consideration for employment without regard to race, religion, color, sex, "disability, and age except where age is a bona fide occupational qualification", national origin or ancestry. In all solicitations or advertisements for employees the vendor, supplier, contractor or subcontractor shall include the phrase, "Equal Opportunity Employer", or a similar phrase;

3. The vendor, supplier, contractor or subcontractor will furnish all information and reports required by the Department of Finance of said City for the purpose of investigation to ascertain compliance with Non-Discrimination -- Equal Employment Opportunity Requirements. If the vendor, supplier, contractor, or subcontractor fails to comply with the manner in which he/she or it reports to the City in accordance with the provisions hereof, the vendor, supplier, contractor or subcontractor shall be deemed to have breached the present contract, purchase order or agreement and it may be canceled, terminated or suspended in whole or in part by the City or its agency; and further Civil Rights complaints, or investigations may be referred to the State;

4. The vendor, supplier, contractor or subcontractor shall include the provisions of Subsections 1 through 3 inclusive, of this present section in every subcontract, subpurchase order or subagreement so that such provisions will be binding upon each subcontractor, subvendor or subsupplier.

5. If the contractor fails to comply with the manner in which the contractor reports to the Department of Finance as stated above, the contractor shall be deemed to have breached this contract and it may be canceled, terminated or suspended in whole or in part by the contracting agency;

D. Exempted from these requirements are:

1. Those contractors, subcontractors, vendors or suppliers who have less than four (4) employees, whose contracts, purchase orders or agreements cumulatively total less than five thousand dollars ($5,000) during the fiscal year of said City are exempt from any further Equal Employment Opportunity or Affirmative Action Program submittal.

2. Those vendors, suppliers, contractors or subcontractors who have already complied with the provisions set forth in this section by reason of holding a contract with the Federal government or contract involving Federal funds; provided that such contractor, subcontractor, vendor or supplier provides written notification of a compliance review and determination of an acceptable compliance posture within a preceding forty-five (45) day period from the Federal agency involved.

City of Wichita
City Council Meeting
September 13, 2011

TO: Mayor and City Council

SUBJECT: Talking Books Service Contract

INITIATED BY: Library

AGENDA: Consent

Recommendation: Approve the contract.

Background: The Wichita Public Library has served as a Subregional Library for the Blind and Physically Handicapped (Talking Books Service) through contracts with the State Library of Kansas since 1971. In response to changing use patterns and declining funding, the State Library has chosen to consolidate all Talking Books lending operations into the Blind and Physically Handicapped Regional Library at Emporia State University. Subregional libraries are being replaced with an outreach program operated by contract with the State's urban libraries and regional library systems.

Analysis: The State Library selected outreach programs for funding based upon request for proposal responses from local libraries and library systems. Wichita Public Library's proposal, approved by the Library Board of Directors on February 15, 2011 and endorsed by the City Council on March 8, 2011, was approved by the State Library of Kansas in late June. Services to be provided through terms of the proposed contract are in alignment with the Library's strategic plan service responses of lifelong learning and reading, listening and viewing for pleasure as well as the Library's existing homebound and bulk loan delivery programs. The Library's current Talking Books Section manager will transfer into a Library Assistant V position in the General Fund on October 1, 2011 and will oversee the work of this Talking Books outreach program in addition to other responsibilities relating to library outreach to adults and senior citizens. The proposed contract was reviewed and approved by the Library Board of Directors on August 16, 2011.

Financial Considerations: The Library will receive $26,500 from the State Library for providing Talking Books outreach service to residents of Sedgwick County from October 1, 2011 through September 30, 2012. No local match or subsidizing of costs will be required although a portion of the contract funding must be used for professional development of staff involved in the outreach service.

Goal Impact: Ensuring access to reading material for citizens who are blind or physically handicapped creates a growing community by contributing to the Quality of Life for these individuals as well as for their families and caregivers.

Legal Considerations: The contract has been approved as to form by the Law Department.

Recommendation/Action: It is recommended that the City Council approve the FY2012 Talking Books Service contract and authorize the necessary signatures.

Attachment: Talking Books Contract

STATE LIBRARY OF KANSAS
F.Y. 2012
Talking Books Service

THIS CONTRACT, is made and executed on the first day of October, 2011, by and between the State Library of Kansas, hereinafter referred to as the State Library, and THE CITY OF WICHITA, a municipal corporation in the state of Kansas. This contract, which shall be administered through the City's Department of Libraries, by its Board of Directors, hereinafter referred to as the Board.

WITNESSETH THAT:

WHEREAS, the Kansas Legislature has allocated for funding for services to the Kansas Talking Books Service, and the Board meets the requirements of the Kansas Administrative Regulations, for the Kansas Talking Books Service; and

WHEREAS, the Board submitted to the State Library an approved outreach plan;

NOW THEREFORE, it is mutually understood and agreed that the Board shall administer a program in compliance with the State Library's Outreach Guidelines as indicated in the approved Talking Books Outreach Proposal.

The Board shall expend and encumber all moneys received under this contract no later than September 30, 2012. The Board shall expend all moneys received under this contract solely for the purposes stated, with no administrative fees allowed, in the aforementioned approval proposal, the approved budget and this contract, and shall repay the State Library all moneys lost or diverted to the purposes other than stated herein.

The State Library shall pay to the Board from available State funds the sum of TWENTY-SIX THOUSAND FIVE HUNDRED DOLLARS on or about October 1, 2011.

AND IT IS FURTHER mutually understood and agreed that the money shall be payable to the Board only upon receipt of the moneys by the State Library through funds of the State of Kansas. If the funds are not received by the State Library, this contract shall be void and the obligations of both parties herein shall be terminated.

IT IS FURTHER mutually understood that the provisions found in the Contractual Provisions Attachment (Form DA-146a) and the Talking Books Outreach Proposal, which are attached hereto and executed by the parties to this agreement, are hereby incorporated in this contract and made a part hereof.

Tom Engelhardt
Library Board President

Mayor

Cynthia Berner Harris
Director of Libraries (Responsible for financial reporting)

State Librarian of Kansas

Gary E. Rebenstorf, DRM
Approved as to form, Wichita Director of Law

State of Kansas
Department of Administration
DA-146a (Rev. 04-11)

CONTRACTUAL PROVISIONS ATTACHMENT

Important: This form contains mandatory contract provisions and must be attached to or incorporated in all copies of any contractual agreement. If it is attached to the vendor/contractor's standard contract form, then that form must be altered to contain the following provision:

"The Provisions found in Contractual Provisions Attachment (Form DA-146a, Rev. 04-11), which is attached hereto, are hereby incorporated in this contract and made a part thereof."

The parties agree that the following provisions are hereby incorporated into the contract to which it is attached and made a part thereof, said contract being the 1st day of October, 20 11.

1. Terms Herein Controlling Provisions: It is expressly agreed that the terms of each and every provision in this attachment shall prevail and control over the terms of any other conflicting provision in any other document relating to and a part of the contract in which this attachment is incorporated. Any terms that conflict or could be interpreted to conflict with this attachment are nullified.

2. Kansas Law and Venue: This contract shall be subject to, governed by, and construed according to the laws of the State of Kansas, and jurisdiction and venue of any suit in connection with this contract shall reside only in courts located in the State of Kansas.

3. Termination Due To Lack Of Funding Appropriation: If, in the judgment of the Director of Accounts and Reports, Department of Administration, sufficient funds are not appropriated to continue the function performed in this agreement and for the payment of the charges hereunder, State may terminate this agreement at the end of its current fiscal year. State agrees to give written notice of termination to contractor at least 30 days prior to the end of its current fiscal year, and shall give such notice for a greater period prior to the end of such fiscal year as may be provided in this contract, except that such notice shall not be required prior to 90 days before the end of such fiscal year. Contractor shall have the right, at the end of such fiscal year, to take possession of any equipment provided State under the contract. State will pay to the contractor all regular contractual payments incurred through the end of such fiscal year, plus contractual charges incidental to the return of any such equipment. Upon termination of the agreement by State, title to any such equipment shall revert to contractor at the end of the State's current fiscal year. The termination of the contract pursuant to this paragraph shall not cause any penalty to be charged to the agency or the contractor.

4. Disclaimer Of Liability: No provision of this contract will be given effect that attempts to require the State of Kansas or its agencies to defend, hold harmless, or indemnify any contractor or third party for any acts or omissions. The liability of the State of Kansas is defined under the Kansas Tort Claims Act (K.S.A. 75-6101 et seq.).

5. Anti-Discrimination Clause: The contractor agrees: (a) to comply with the Kansas Act Against Discrimination (K.S.A. 44-1001 et seq.) and the Kansas Age Discrimination in Employment Act (K.S.A. 44-1111 et seq.) and the applicable provisions of the Americans With Disabilities Act (42 U.S.C. 12101 et seq.) (ADA) and to not discriminate against any person because of race, religion, color, sex, disability, national origin or ancestry, or age in the admission or access to, or treatment or employment in, its programs or activities; (b) to include in all solicitations or advertisements for employees, the phrase "equal opportunity employer"; (c) to comply with the reporting requirements set out at K.S.A. 44-1031 and K.S.A. 44-1116; (d) to include those provisions in every subcontract or purchase order so that they are binding upon such subcontractor or vendor; (e) that a failure to comply with the reporting requirements of (c) above or if the contractor is found guilty of any violation of such acts by the Kansas Human Rights Commission, such violation shall constitute a breach of contract and the contract may be cancelled, terminated or suspended, in whole or in part, by the contracting state agency or the Kansas Department of Administration; (f) if it is determined that the contractor has violated applicable provisions of ADA, such violation shall constitute a breach of contract and the contract may be cancelled, terminated or suspended, in whole or in part, by the contracting state agency or the Kansas Department of Administration.

   Contractor agrees to comply with all applicable state and federal anti-discrimination laws.

   The provisions of this paragraph number 5 (with the exception of those provisions relating to the ADA) are not applicable to a contractor who employs fewer than four employees during the term of such contract or whose contracts with the contracting State agency cumulatively total $5,000 or less during the fiscal year of such agency.

6. Acceptance Of Contract: This contract shall not be considered accepted, approved or otherwise effective until the statutorily required approvals and certifications have been given.

7. Arbitration, Damages, Warranties: Notwithstanding any language to the contrary, no interpretation of this contract shall find that the State or its agencies have agreed to binding arbitration, or the payment of damages or penalties. Further, the State of Kansas and its agencies do not agree to pay attorney fees, costs, or late payment charges beyond those available under the Kansas Prompt Payment Act (K.S.A. 75-6403), and no provision will be given effect that attempts to exclude, modify, disclaim or otherwise attempt to limit any damages available to the State of Kansas or its agencies at law, including but not limited to the implied warranties of merchantability and fitness for a particular purpose.

8. Representative's Authority To Contract: By signing this contract, the representative of the contractor thereby represents that such person is duly authorized by the contractor to execute this contract on behalf of the contractor and that the contractor agrees to be bound by the provisions thereof.

9. Responsibility For Taxes: The State of Kansas and its agencies shall not be responsible for, nor indemnify a contractor for, any federal, state or local taxes which may be imposed or levied upon the subject matter of this contract.

10. Insurance: The State of Kansas and its agencies shall not be required to purchase any insurance against loss or damage to property or any other subject matter relating to this contract, nor shall this contract require them to establish a "self-insurance" fund to protect against any such loss or damage. Subject to the provisions of the Kansas Tort Claims Act (K.S.A. 75-6101 et seq.), the contractor shall bear the risk of any loss or damage to any property in which the contractor holds title.

11. Information: No provision of this contract shall be construed as limiting the Legislative Division of Post Audit from having access to information pursuant to K.S.A. 46-1101 et seq.

12. The Eleventh Amendment: "The Eleventh Amendment is an inherent and incumbent protection with the State of Kansas and need not be reserved, but prudence requires the State to reiterate that nothing related to this contract shall be deemed a waiver of the Eleventh Amendment."

Kansas Talking Book Program and Outreach Services Contracts

The purpose of contracting with Program and Outreach Service providers, in cooperation with the State Library, is to ensure that every qualifying entity is made aware of the program's attributes through a personal and professional connection to a quality library service.

TALKING BOOK PROGRAM AND OUTREACH SERVICE PROVIDERS COMMIT TO PROVIDING THE FOLLOWING :

Outreach - promoting awareness of Talking Book Library - to include the following:

Developing and maintaining a list of agencies and partner services in the region as a ready referral reference guide;

Providing information packets to, and maintain contact with, public and private agencies, libraries, professional and civic organizations and others in contact with potential clients;

Making a minimum of 12 general public presentations about the Talking Book Library Service per year at events that highlight community resources, such as, but not limited to, the following:

Health fairs	Library meetings
Business fairs	School inservice programs
Service Clubs – Lions/Optimist	Summer extravaganzas;

Maintaining a presence through interaction with public, school and special library staff;

Providing support to patrons, organizations, and libraries via print, phone and electronic formats on an ongoing basis;

Maintaining or contributing content to an accessible website and newsletter containing general information about the program as well as contact information;

Promoting availability of local programming through appropriate local media sources.

Programming - promoting ongoing involvement and a sense of belonging - to include the following:

Developing local program sessions throughout the service areas. Activities may include, but are not limited to:

- Low vision support groups
- Informational presentations or updates
- Talking Book Open House;
- US Postal Service recognition

Providing training related to Talking Book Library Services or related devices or services; i.e., commercial digital players, Recordings for the Blind and Dyslexic, commercial audio books & magazines;

Developing and participating in programs that promote reading, such as book discussion groups, summer reading programs, Kansas Reads, Kansas Reads to Preschoolers and other appropriate local and statewide programs. These may be done through local or distributed means (face-to-face or via fully-accessible voice-over IP);

Providing to groups of patrons, upon request, training sessions for Talking Book-related activities such as downloading materials or selecting/ordering available resources;

Partnering with support agencies (libraries, senior and independent living centers, and health facilities) that may provide training in the areas of life, education, technology or employment skills.

Performing Professional Responsibilities that include the following:

Providing monthly reports of outreach/program activities to local and state administrative agencies (Forwarding of reports submitted to local administrative agencies to the Regional Library will meet general state reporting requirements);

Providing monthly equipment and accessory reports as required by NLS guidelines that are not otherwise included in the KLAS database;

Attending quarterly state-wide Talking Book Library meetings;

Participating in at least two continuing education opportunities per year;

Attending related conferences such as Kansas Library Association, NLS Biennial Conference, Midlands Conference, KLAS Conference (travel expenses beyond the annual allocations provided for Program and Outreach Services will vary dependent upon local restrictions and availability of funding);

Providing recommendations for service on the Kansas Talking Book Advisory Council and NLS committees;

Entering into KLAS in a timely manner, patron information and received material requests.

IN SUPPORT OF THE PROGRAM AND OUTREACH SERVICES THE STATE LIBRARY COMMITS TO:

Outreach - promoting awareness of Talking Book Library - to include the following:

Developing and maintaining a supply of resources to be included in the information packets, such as brochures, applications, and general letterhead for agency-related communications and promotion.

Meeting with representatives of each contracting site on an annual basis to provide feedback and assistance in the development of an outreach plan for the coming year;

Providing a financial support, $500 stipend, to be included in the annual contract to be applied toward costs associated with outreach efforts;

Providing and maintaining a supply of equipment and sample books to newly registered patrons;

Facilitating ongoing training and information sharing related to best practices in the areas of outreach and programming.

Programming - promoting ongoing involvement and a sense of belonging - to include the following:

Developing and maintaining a supply of support materials for local programming efforts;

Facilitating ongoing training and information sharing related to best practices in the areas of outreach and programming.

Performing Professional Responsibilities to include the following:

Maintaining a staffing level to ensure service to patrons in a timely manner;
Be responsible for submission of all required semi-annual and annual data required by NLS;
Providing financial support (a $1000 stipend) to be included in the annual contract to be applied toward fees associated with conference attendance and professional development efforts.
Providing monthly reports regarding regionalized patron activity to new applications processed, accounts reactivated, cancelled, suspended or deceased.

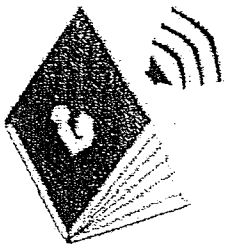

PROPOSAL

For Talking Books Library

Outreach Services to

Sedgwick County

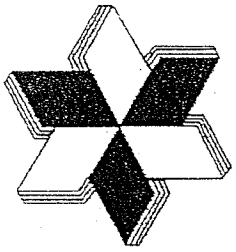

WICHITA PUBLIC LIBRARY
The Discovery Center
www.wichita.lib.ks.us

WICHITA PUBLIC LIBRARY
The Discovery Center
www.wichita.lib.ks.us

March 8, 2011

Jo Budler, State Librarian
State Library of Kansas
300 SW 10th Ave., Room 169-W
Topeka, KS 66612-1593

Dear Jo,

I am pleased to submit this response on behalf of the Wichita Public Library to your request for proposals for the delivery of outreach service for the Kansas Talking Books Program for residents of Sedgwick County.

Our Library's partnerships with the other libraries throughout this county, our involvement in the Senior Wednesday coalition and our existing services to schools, nursing homes and retirement communities position us to perform the tasks outlined in the outreach guidelines with efficiency and effectiveness.

Please note that all of the outcomes proposed here are contingent upon receipt of timely and consistent communication and support from the State Library/Kansas Talking Books Regional Library staff.

The Wichita Public Library's service as a Subregional Library for the Blind and Physically Handicapped has been a successful partnership for many years. Although we regret that changing conditions have required elimination of subregional libraries, we look forward to the opportunity to continue to be a service provider to Talking Books users through the new business model for this important program.

Sincerely,
Cynthia Berner Harris
Cynthia Berner Harris
Director of Libraries

223 South Main * Wichita, KS 67202 * (316) 261-8500 * cberner@wichita.gov

2011-2012 PROPOSED WORK PLAN

In exchange for an annual grant in the amount of $26,500, the Wichita Public Library proposes to provide the following services during a service year beginning October 1, 2011 and continuing through September 30, 2012.

GOAL #1: Promote awareness of the Talking Books Library throughout Sedgwick County

Strategy #1.1: Develop and maintain a list of agencies and partner service providers, including but not limited to libraries, schools, senior centers, retirement communities, nursing homes, eye care professionals and organizations serving special needs clienteles such as Envision, the Independent Living Center and the Cerebral Palsy Research Foundation.

Strategy #1.1.1: Maintain regular interaction with contacts from schools and libraries in order to keep Talking Books an active part of their service delivery

Strategy #1.1.2: Maintain a supply of information packets about the Talking Books Service to be made widely available to agency and service provider contacts identified in Strategy #1.1 as well as to other individuals and organizations throughout the county who have the opportunity to be in contact with potential clients

Strategy #1.2: Plan and present a minimum of twelve general public presentations per year at events that highlight community resources such as, but not limited to: Senior Expo, home school association conference, community expos at area shopping centers, open houses at area libraries and schools, presentations to civic groups, etc.

Strategy #1.2.1: Promote availability of local Talking Books programming through local media outlets

Strategy #1.3: Supplement the work of the Regional Library by providing staff support via telephone, email, letters and newsletters to Talking Books readers and their families, libraries and other partner service providers.

Strategy #1.4: Contribute content to an accessible website and newsletter containing general information about the Talking Books Program

GOAL #2: Use programming to encourage ongoing involvement and a sense of belonging for eligible Talking Books readers

Strategy #2.1: Work in partnership with county libraries and service providers to identify programs of interest and value to Talking Books readers

Strategy #2.1.1: Actively seek programming partnerships for programming on areas beyond reading

Strategy #2.2: Create training opportunities relating to audio books and magazines, downloadable books and music, etc. ensuring inclusion of information about Talking Books Library Services

Strategy #2.2.1: Develop and make available training sessions for specialized Talking Books activities such as downloading titles and selecting and ordering available resources

Strategy #2.3: Create opportunities for readers to participate in reading programs such as Kansas Reads, Kansas Reads to Preschoolers, local summer and winter reading programs, The Big Read, etc.

GOAL #3: Provide administrative support for the Kansas Talking Books Service

Strategy #3.1: Complete and submit monthly reports as required by NLS guidelines and as requested by the State Library of Kansas

Strategy #3.2: Complete data entry into KLAS system updated in a timely manner

Strategy #3.3: To the degree that funding and City of Wichita travel policies allow, ensure attendance of outreach librarian at: 1) quarterly state-wide Talking Books Library meetings; 2) two continuing education activities; 3) one Talking Books related conference

Strategy #3.4: Provide recommendations for service to the Kansas Talking Books Advisory Council and NLS Committees

Delivery of Service and Accomplishment of Work Plan. The Wichita Public Library shall not provide funding subsidies for Talking Books outreach to Sedgwick County. Service provided to the State Library of Kansas/Kansas Talking Books Regional Library under the terms of this proposal shall be limited to staffing, travel and activities that can be accomplished within the grant funding provided for this service delivery.

After deducting from the $26,500 grant funds to be restricted for use toward fees associated with conference attendance and professional development efforts ($1,000), in-county travel and programming expenses, the Library anticipates the ability to dedicate an average of approximately 25% (10 hours per week) of the time of a full-time Senior Outreach Librarian (Library Assistant V) to Talking Books outreach service.

Expectations of the State Library. To assist the Wichita Public Library in fulfilling the proposed work plan in ways that ensure the outcomes outlined below, the Library will depend on the State Library for the following items:

- The ability to obtain weekly reports of Talking Books readership changes in the Sedgwick County service area. [This may be made available through reports generated and forwarded by state library staff or by ensuring that ability of the Senior Outreach Librarian to generate the reports directly from the KLAS system.]
- Updates about policy and procedure changes at the Kansas Talking Books Regional Library in advance of their implementation.
- Feedback from the State Library/Kansas Talking Books Regional Library concerning service delivery and implementation of the proposed work plan on no less than a monthly basis.
- Forwarding of all comments about Talking Books Service in Sedgwick County received by the State Library/Kansas Talking Books Regional Library on no less than a semi-monthly basis in order to allow the Senior Outreach Librarian an opportunity to address concerns or to build upon identified service successes.

Outcomes and Evaluation. Implementation of the 2011-2012 proposed work plan will position the Wichita Public Library to deliver the following outcomes to the State Library under the terms of this grant. The methods by which each outcome shall be evaluated are also outlined below.

1. Talking Books readership within Sedgwick County will be at least maintained during the initial transition year after the closing of the Wichita Subregional Library for the Blind and Physically Handicapped. *[Evaluation: Comparison of Talking Books readership within Sedgwick County on September 30, 2011 and September 30, 2012]*
2. A network of no less than 100 agencies and partner service providers shall be identified and used to promote Talking Books services. *[Evaluation: Count of list of agencies and service providers as prepared in proposed work plan strategy #1.1]*

3. Participation in Talking Books outreach programming in Sedgwick County will equate to a target goal of 5% of current readership. *[Evaluation: Count of program participants/September 30, 2012 readership]*
4. 100% of reports identified in the work plan will be provided to the State Library/Kansas Regional Library by or before established deadlines. *[Evaluation: Due dates for reports to be provided by State Library staff and to be compared against report submission dates as recorded by WPL Senior Outreach Librarian]*
5. A 95% satisfaction rate by Sedgwick County residents for Talking Books outreach service delivery from the Wichita Public Library will be maintained. *[Evaluation: Satisfaction survey sampling from outreach programming and presentations and feedback from county's Talking Books readership]*

City of Wichita
City Council Meeting
September 13, 2011

TO: Mayor and City Council

SUBJECT: Agreement for Design Services for Water, Storm Water Sewer, and Paving Improvements in Monarch Landing 3rd Addition (north of 21st, west of 159th Street East) (District II)

INITIATED BY: Department of Public Works

AGENDA: Consent

Recommendation: Approve the agreement.

Background: The City Council approved the water, storm water sewer, and paving improvements in Monarch Landing 3rd Addition on July 12, 2011.

Analysis: The proposed agreement between the City and MKEC Engineering Consultants, Inc. (MKEC) provides for the design of bond financed improvements consisting of water, storm water sewer, and paving in Monarch Landing 3rd Addition. Per Administrative Regulation 1.10, staff recommends that MKEC be hired for this work, as this firm provided the preliminary engineering services for the platting of the subdivision and can expedite plan preparation.

Financial Considerations: Payment to MKEC will be on a lump sum basis of $56,495 and will be paid by special assessments.

Goal Impact: This agreement addresses the Efficient Infrastructure goal by providing the engineering design services needed for the construction of water, storm water sewer, and paving improvements in a new subdivision. It also addresses the Economic Vitality and Affordable Living goal by providing public improvements in new developments that are vital to Wichita's continued economic growth.

Legal Considerations: The agreement has been approved as to form by the Law Department.

Recommendation/Action: It is recommended that the City Council approve the agreement and authorize the necessary signatures.

Attachments: Agreement.

AGREEMENT

for

PROFESSIONAL SERVICES

between

THE CITY OF WICHITA, KANSAS

and

MKEC ENGINEERING CONSULTANTS, INC.

for

MONARCH LANDING 3rd ADDITION

THIS AGREEMENT, made this _____ day of _____, 2011, by and between the CITY OF WICHITA, KANSAS, party of the first part, hereinafter called the "CITY" and MKEC ENGINEERING CONSULTANTS, INC., party of the second part, hereinafter called the "ENGINEER".

WITNESSETH: That

WHEREAS, the CITY intends to construct;

WATER DISTRIBUTION SYSTEM NO. 448 90528 serving Lots 1 through 22, Block 1; Lots 1 through 13, Block 2; Lots 1 through 6, Block3, Monarch Landing 3rd Addition (north of 21st, west of 159th Street East) (Project No. 448 90528).

LATERAL 2, MAIN 23, FOUR MILE CREEK SEWER serving Lots 1 through 22, Block 1; Lots 1 through 13, Block 2; Lots 1 through 6, Block 3, Monarch Landing 3rd Addition (north of 21st, west of 159th Street East) (Project No. 468 84770).

STORM WATER SEWER NO. 661 serving Lots 1 through 22, Block 1; Lots 1 through 13, Block 2; Lots 1 through 6, Block 3, Monarch Landing 3rd Addition (north of 21st, west of 159th Street East) (Project No. 468-84771).

CAMDEN CHASE from the west line of 159th Street East to the southwest corner of Lot 6, Block 3; **FLUTTER COURT** from the east line of Flutter Lane for approximately 325 feet serving lots 14 through 22, Block 1, Monarch Landing 3rd Addition (north of 21st, west of 159th Street East) (Project No. 472-84999).

NOW, THEREFORE, the parties hereto do mutually agree as follows:

SCOPE OF SERVICES

The ENGINEER shall furnish professional services as required for designing improvements in Monarch Landing 3rd Addition and perform the PROJECT tasks outlined in Exhibit A.

II. IN ADDITION, THE ENGINEER AGREES

A. To provide the various technical and professional services, equipment, material and transportation to perform the tasks as outlined in the SCOPE OF SERVICES (Exhibit A).

B. To attend meetings with the City and other local, state and federal agencies as necessitated by the SCOPE OF SERVICES.

C. To make available during regular office hours, all calculations, sketches and drawings such as the CITY may wish to examine periodically during performance of this agreement.

D. To save and hold CITY harmless against all suits, claims, damages and losses for injuries to persons or property arising from or caused by errors, omissions or negligent acts of ENGINEER, its agents, servants, employees, or subcontractors occurring in the performance of its services under this contract.

E. To maintain books, documents, papers, accounting records and other evidence pertaining to costs incurred by ENGINEER and, where relevant to method of payment, to make such material available to the CITY.

F. To comply with all Federal, State and local laws, ordinances and regulations applicable to the work, including Title VI of the Civil Rights Act of 1964, and to comply with the CITY'S Affirmative Action Program as set forth in Exhibit "B" which is attached hereto and adopted by reference as though fully set forth herein.

G. To accept compensation for the work herein described in such amounts and at such periods as provided in Article IV and that such compensation shall be satisfactory and sufficient payment for all work performed, equipment or materials used and services rendered in connection with such work.

H. To complete the services to be performed by ENGINEER within the time allotted for the PROJECT in accordance with Exhibit A; EXCEPT that the ENGINEER shall not be responsible or held liable for delays occasioned by the actions or inactions of the CITY or other agencies, or for other unavoidable delays beyond control of the ENGINEER.

I. Covenants and represents to be responsible for the professional and technical accuracies and the coordination of all designs, drawings, specifications, plans and/or other work or material furnished by the ENGINEER under this agreement. ENGINEER further agrees, covenants and represents, that all designs, drawings, specifications, plans, and other work or material furnished by ENGINEER, its agents, employees and subcontractors, under this agreement, including any additions, alterations or amendments thereof, shall be free from negligent errors or omissions.

J. ENGINEER shall procure and maintain such insurance as will protect the ENGINEER from damages resulting from the negligent acts of the ENGINEER, its agents, officers, employees and subcontractors in the performance of the professional services rendered under this agreement. Such policy of insurance shall be in an amount not less than $500,000.00 subject to a deductible of $10,000.00. In addition, a Workman's Compensation and Employer's Liability Policy shall be procured and maintained. This policy shall include an "all state" endorsement. Said insurance policy shall also cover claims for injury, disease or death of employees arising out of and in the course of their employment, which, for any reason, may not fall within the provisions of the Workman's Compensation Law. The liability limit shall be not less than:

Workman's Compensation – Statutory
Employer's Liability - $500,000 each occurrence.

Further, a comprehensive general liability policy shall be procured and maintained by the ENGINEER that shall be written in a comprehensive form and shall protect ENGINEER against all claims arising from injuries to persons (other than ENGINEER'S employees) or damage to property of the CITY or others arising out of any negligent act or omission of ENGINEER, its agents, officers, employees or subcontractors in the performance of the professional services under this agreement. The liability limit shall not be less than $500,000.00 per occurrence for bodily injury, death and property damage. Satisfactory Certificates of Insurance shall be filed with the CITY prior to the time ENGINEER starts any work under this agreement. In addition, insurance policies applicable hereto shall contain a provision that provides that the CITY shall be given thirty (30) days written notice by the insurance company before such policy is substantially changed or canceled.

K. To designate a Project Manager for the coordination of the work that this agreement requires to be performed. The ENGINEER agrees to advise the CITY, in writing, of the person(s) designated as Project Manager not later than five (5) days following issuance of the notice to proceed on the work required by this agreement. The ENGINEER shall also advise the CITY of any changes in the person designated Project Manager. Written notification shall be provided to the CITY for any changes exceeding one week in length of time.

III. THE CITY AGREES:

A. To furnish all available data pertaining to the PROJECT now in the CITY'S files at no cost to the ENGINEER. Confidential materials so furnished will be kept confidential by the ENGINEER.

B. To provide standards as required for the PROJECT; however, reproduction costs are the responsibility of the ENGINEER, except as specified in Exhibit A.

C. To pay the ENGINEER for his services in accordance with the requirements of this agreement.
D. To provide the right-of-entry for ENGINEER'S personnel in performing field surveys and inspections.
E. To designate a Project Manager for the coordination of the work that this agreement requires to be performed. The CITY agrees to advise, the ENGINEER, in writing, of the person(s) designated as Project Manager with the issuance of the notice to proceed on the work required by this agreement. The CITY shall also advise the ENGINEER of any changes in the person(s) designated Project Manager. Written notification shall be provided to the ENGINEER for any changes exceeding one week in length of time.
F. To examine all studies, reports, sketches, drawings, specifications, proposals and other documents presented by ENGINEER in a timely fashion.

IV. PAYMENT PROVISIONS

A. Payment to the ENGINEER for the performance of the professional services required by this agreement shall be made on the basis of the lump sum fee amount specified below:

Project No. 448 90528	$7,075.00
Project No. 468 84770	$11,520.00
Project No. 468 84771	$20,500.00
Project No. 472 84999	$17,400.00
TOTAL	$56,495.00

B. When requested by the CITY, the ENGINEER will enter into a Supplemental Agreement for additional services related to the PROJECT such as, but not limited to:
   1. Consultant or witness for the CITY in any litigation, administrative hearing, or other legal proceedings related to the PROJECT.
   2. Additional design services not covered by the scope of this agreement.
   3. Construction staking, material testing, inspection and administration related to the PROJECT.
   4. A major change in the scope of services for the PROJECT.

   If additional work should be necessary, the ENGINEER will be given written notice by the CITY along with a request for an estimate of the increase necessary in the not-to-exceed fee for performance of such additions. No additional work shall be performed nor shall additional compensation be paid except on the basis of a Supplemental Agreement duly entered into by the parties.

V. THE PARTIES HERETO MUTUALLY AGREE:

A. That the right is reserved to the CITY to terminate this agreement at any time, upon written notice, in the event the PROJECT is to be abandoned or indefinitely postponed, or because of the ENGINEER'S inability to proceed with the work.
B. That the field notes and other pertinent drawings and documents pertaining to the PROJECT shall become the property of the CITY upon completion or termination of the ENGINEER'S services in accordance with this agreement; and there shall be no restriction or limitation on their further use by the CITY. Provided, however, that CITY shall hold ENGINEER harmless from any and all claims, damages or causes of action which arise out of such further use when such further use is not in connection with the PROJECT.
C. That the services to be performed by the ENGINEER under the terms of this agreement are personal and cannot be assigned, sublet or transferred without specific consent of the CITY.
D. In the event of unavoidable delays in the progress of the work contemplated by this agreement, reasonable extensions in the time allotted for the work will be granted by the CITY, provided, however, that the ENGINEER shall request extensions, in writing, giving the reasons therefor.
E. It is further agreed that this agreement and all contracts entered into under the provisions of this agreement shall be binding upon the parties hereto and their successors and assigns.
F. Neither the CITY'S review, approval or acceptance of, nor payment for, any of the work or services required to be performed by the ENGINEER under this agreement shall be construed to operate as a waiver of any right under this agreement or any cause of action arising out of the performance of this agreement.
G. The rights and remedies of the CITY provided for under this agreement are in addition to any other rights and remedies provided by law.
H. It is specifically agreed between the parties executing this contract, that it is not intended by any of the provisions of any part of this contract to create the public or any member thereof a third party beneficiary hereunder, or to authorize anyone not a party to this contract to maintain a suit for damages pursuant to the terms or provisions of this contract.

IN WITNESS WHEREOF, the CITY and the ENGINEER have executed this agreement as of the date first written above.

BY ACTION OF THE CITY COUNCIL

_____
Carl Brewer, Mayor

SEAL:

ATTEST:

_____
Karen Sublett, City Clerk

APPROVED AS TO FORM:

_____
Gary Rebenstorf, Director of Law

MKEC ENGINEERING CONSULTANT, INC.

_____
(Name & Title)

ATTEST:

_____

EXHIBIT "A"

SCOPE OF SERVICES

The ENGINEER shall furnish engineering services as required for the development of plans, supplemental specifications and estimates of the quantities of work for the PROJECT in the format and detail required by the City Engineer for the City of Wichita. Engineering plans shall be prepared per Attachment No. 1.

In connection with the services to be provided, the ENGINEER shall:

A. PHASE I – PLAN DEVELOPMENT

When authorized by the CITY, proceed with development of Plans for the PROJECT based on the preliminary design concepts approved by the CITY.

1. Field Surveys. Provide engineering and technical personnel and equipment to obtain survey data as required for the engineering design. Utility companies shall be requested to flag or otherwise locate their facilities within the PROJECT limits prior to the ENGINEER conducting the field survey for the PROJECT. Utility information shall be clearly noted and identified on the plans.
2. Storm Water Pollution Prevention. On projects that disturb one acre or more, the ENGINEER will prepare a storm water pollution prevention plan, prepare the necessary permit application(s) and include any provisions or requirements in the project plans and special provisions. The storm water pollution prevention plan shall also include submittal of a NOI prior to bidding; site-specific erosion control plan; and standard BMP detail sheets per Attachment No. 1.
3. Soils and Foundation Investigations. The CITY'S Engineering Division of the Department of Public Works shall provide subsurface borings and soils investigations for the PROJECT. However, the CITY may authorize the ENGINEER to direct an approved Testing Laboratory to perform subsurface borings and soils investigations for the PROJECT, which shall be reported in the format and detail required by the City Engineer for the City of Wichita. The Testing Laboratory shall be responsible for the accuracy and competence of their work. The ENGINEER'S contract with the Testing Laboratory shall provide that the Testing Laboratory is responsible to the City for the accuracy and competence of their work. The cost of soils and boring investigations shall be passed directly to the City of Wichita.
4. Review Preliminary Design Concepts. Submit preliminary design concepts for review with the City Engineer or his designated representative prior to progressing to detail aspects of the work unless waived by the City Engineer.
5. Drainage Study. When applicable, conduct a detailed study to explore alternative design concepts concerning drainage for the PROJECT. Present the findings in writing identifying recommendations to the CITY, including preliminary cost estimates, prior to development of final check plans. Such written findings and recommendations must be in a format which is self explanatory and readily understood by persons with average backgrounds for the technology involved.
6. Prepare engineering plans, plan quantities and supplemental specifications as required. Engineering plans will include incidental drainage where required and permanent traffic signing. The PROJECT'S plans and proposed special provisions shall address the requirements included in the City's Administrative Regulations 6.5, "Cleanup, Restoration or Replacement Following Construction." Also, final plans, field notes and other pertinent project mapping records are to be submitted per Attachment No. 1. The files are to be AutoCAD drawing files or DXF/DXB files. Layering, text fonts, etc. are to be reviewed and approved during the preliminary concept development phase of the design work. Text fonts other than standard AutoCAD files are to be included with drawing files. In addition to supplying the electronic files of the AutoCAD drawing files of the final plans, ENGINEER will also need to supply electronic files of the drawings in PDF format.
7. Prepare right-of-way tract maps and descriptions as required in clearly drawn detail and with sufficient reference to certificate of title descriptions. ENGINEER will perform all necessary survey work associated with marking the additional right-of-way easements. This shall include the setting monuments of new corners for any additional right-of-way and a one time marking of the right-of-way for utility relocations.
8. Identify all potential utility conflicts and provide prints of preliminary plans showing the problem locations to each utility. ENGINEER shall meet with utility company representatives to review plans and coordinate resolution of utility conflicts prior to PROJECT letting or, if approved by the City Engineer, identify on plans conflicts to be resolved during construction. Provide to CITY utility status report identifying utility conflicts with dates by which the conflicts will be eliminated with signed utility agreements from each involved utility company. ENGINEER shall meet with involved utility company/ies and project contractor to resolve any conflicts with utilities that occur during construction that were not identified and coordinated during design.

9. All applicable coordinate control points and related project staking information shall be furnished on a map on the plans, as well on CD-ROM, as a text file, along with the project PDF's. When applicable, this coordinate information will be used by the CITY for construction staking purposes.
10. All shop drawings submitted by the contractor for the PROJECT shall be reviewed and, when acceptable, approved for construction by the ENGINEER for the PROJECT.
11. The ENGINEER shall meet with effected property owners, along with City staff, at a pre-construction Public Information Meeting, as arranged by the City, to explain project design, including such issues as construction phasing and traffic control.
12. The ENGINEER shall complete permanent monumentation of all new R/W, complete and submit all necessary legal documentation for same.
13. Permits. The ENGINEER shall prepare any and all necessary permits for this PROJECT, such as the preparation of applications for U.S. Army Corps of Engineers (404) permits, Division of Water Resources permit, Kansas Department of Wildlife and Parks permit and Kansas Department of Health and Environment permit. Also if requested by the CITY, obtain construction approval from the U.S. Army Corps of Engineers and assist the CITY in coordinating the archaeological review of the PROJECT.
14. Complete and deliver field notes, plan tracings, specifications and estimates to the CITY within the time allotted for the PROJECTS as stipulated below.
    a. Plan Development for the water improvements by 120 days from notice to proceed. (Project No. 448 90528).
    b. Plan Development for the sewer improvements by 120 days from notice to proceed. (Project No. 468 84770).
    c. Plan Development for the storm water improvements by 120 days from notice to proceed. (Project No. 468 84771).
    d. Plan Development for the paving improvements by 120 days from notice to proceed. (Project No. 472 84999).

Attachment No. 1 to Exhibit "A" – Scope of Services

Plan Submittal

Water projects plans shall be submitted with (1) set of mylar plans; and a CD of the .dwgs and .pdfs. This includes projects that have the water plans incorporated into that project, for which the cover sheet should also be included.

Storm Sewer, Sanitary Sewer and Paving plans shall be submitted in a .dwg and .pdf format on a CD.

Paper plan submittals for KDOT projects (i.e. Field Check, ULCC, Final Check, etc.) will not change and the cover sheet mylar will be required for all projects for signature purposes. Projects that have water lines incorporated into the project are required to have those pages in a mylar format. The complete project must be submitted in a scalable .pdf format.

In addition, two (2) sets of 11"x17" plans will be submitted at the time of final .pdf submittal for ALL projects, regardless of the type.

Storm Water Pollution Prevention

For any project disturbing one acre of ground or more, the design Consultant must prepare a Notice of Intent and a Storm Water Pollution Prevention Plan and submit them to the KDHE for approval. Complete copies of the approved NOI and SWP3 must be provided to the City, prior to bidding. One hard copy should be provided to the project engineer upon approval, one electronic copy should be included with your transmittal of PDF plan files, and one additional electronic copy should be sent to the attention of Mark Hall at the following address:

City of Wichita
Environmental Services
1900 E. 9th St. North
Wichita, KS 67214

THIS INCLUDES **ALL** PROJECTS DISTURBING ONE ACRE OR MORE – I.E. NEW DEVELOPMENT, ARTERIAL STREETS, DIRT STREETS, BIKE PATHS, SEWER MAINS, ETC.

The City of Wichita will, under no circumstance, bid any project without first receiving copies of the KDHE approved NOI and SWP3.

The design of all City of Wichita construction projects must include the development of a site-specific erosion control plan. The site-specific erosion control plan must be included in the project plans. Every component and requirement of the erosion control plan must be separately and accurately accounted as a measured quantity bid item in the engineer's estimate.

Please note that careful consideration must be given to the transition of BMP maintenance responsibilities throughout the course of multi-phased projects. All intended responsibilities must be clearly demonstrated by the bid items. For example, if it is intended that the contractor of a subsequent waterline project be responsible for the maintenance of silt fence installed with a preceding sanitary sewer project, a measured quantity bid item must be submitted for x-lf of silt fence maintenance.

The City's current BMP standard detail sheets shall be included in all plans. These five sheets must be included in every plan set developed for the City of Wichita, regardless of project size.

Agenda Item No. II-8b

City of Wichita
City Council Meeting
September 13, 2011

TO: Mayor and City Council

SUBJECT: Agreement for Design Services for Redbud Multi-Use Path (District I)

INITIATED BY: Department of Public Works & Utilities

AGENDA: Consent

- -

Recommendation: Approve the design agreement and design/right-of-way acquisition funds.

Background: The Capital Improvement Program (CIP) includes funding to construct a multi-use path within the rail banked Frisco Railroad right-of-way from the I-135 Freeway near Murdock to Oliver at 17th Street. On June 8, 2010, the City Council approved receipt of a Kansas Department of Health and Environment grant that built portions of the path. On August 6, 2010, the Kansas Department of Transportation advised that the project was awarded Transportation Enhancement funding for approximately $1,650,000, with a 30% local match required. A Request for Qualifications was issued on May 16, 2011, to design the complete project. Responses were received from five consultants. On July 7, 2011, the Staff Screening and Selection Committee interviewed three consultants: Baughman Company, Professional Engineering Consultants and Ruggles & Bohm. The Staff Screening and Selection Committee recommended Baughman because of thoroughness in overall approach and specific recommendations at intersections.

Analysis: The agreement provides for the design of a ten foot wide multi-use path, including landscaping, rest areas and lighting.

Financial Considerations: Payment to Baughman will be on a lump sum basis of $166,820. The Adopted CIP includes $3.75 million in General Obligation (GO) funding for this project in 2014-2015. Based on the receipt of grant funding and the revised time line, the proposed CIP will include $2.6 million, including $250,000 in GO funding in 2011 and $2.35 million (including $750,000 GO and $1.65 million in grant funding) in 2012. Staff proposes that $250,000 included in the proposed CIP for design, right-of-way acquisition and in-house project administration costs be approved at this time. The funding source is General Obligation Bonds.

Goal Impact: This project addresses the Efficient Infrastructure goal by enlarging the City's multi-use path system.

Legal Considerations: The Law Department has approved the authorizing resolution and design agreement as to legal form.

Recommendations/Actions: It is recommended that the City Council approve the design/right-of-way acquisition project, approve the design agreement, approve the resolution and authorize the signing of State/Federal agreements as required.

Attachments: CIP sheet, agreement and resolution.

AGREEMENT

for

PROFESSIONAL SERVICES

between

THE CITY OF WICHITA, KANSAS

and

BAUGHMAN COMPANY, P.A.

for

REDBUD MULTI-USE PATH

THIS AGREEMENT, made this _____ day of _____, 2011, by and between the CITY OF WICHITA, KANSAS, party of the first part, hereinafter called the "CITY" and BAUGHMAN COMPANY, P.A., party of the second part, hereinafter called the "ENGINEER".

WITNESSETH: That

WHEREAS, the CITY intends to construct;

A 10-foot wide concrete multi-use bicycle/pedestrian facility with appropriate shoulders along the rail banked right-of-way, starting north of Elm at I-135 and ending at 17th & Oliver.

Specific items to be included in the design:

- Existing railroad bridge at Wichita Drainage Canal – The design shall include an upgrade/retrofit of the existing bridge to accommodate pedestrians, thus allowing for a connection to the existing path under I-135.
- Elevated intersections – The road profiles at Piatt, Grove and Green shall be lowered as much as possible. The design shall also consider narrowing these streets where the path crosses.
- 9th & Hillside – The proposed route shall cross Hillside utilizing the signals at 9th Street. The design shall include all necessary improvements to the 9th & Hillside intersection, including signalization upgrades, if needed.
- Existing path – Project 472-84934 constructed portions of the path between I-135 and 13th Street, utilizing environmental grant funding. Work on this project stopped approximately 300 feet north of 13th. A copy of the typical section detail for that project is included with this RFQ. The design shall include connecting to existing sections of path. The area immediately adjacent to either side of 13th Street will be constructed with the 13th Street Improvements, from Hydraulic to Oliver.

The overall design shall include evaluation of the following, with those items approved by the City Engineer's office to be included in the final plans:

- Furniture – benches and trash receptacles, similar to existing City inventory
- LED Lighting – evaluation of the complete corridor with recommendations for alternative lighting design, if applicable

- Signage – consistent with AASHTO and MUTCD requirements
- Landscaping – design shall provide for mostly drought resistant materials requiring minimal maintenance
- Pause Points/Trail Heads – if space allows without the need to acquire right-of-way

NOW, THEREFORE, the parties hereto do mutually agree as follows:

SCOPE OF SERVICES

The ENGINEER shall furnish professional services as required for designing improvements and to perform the PROJECT tasks outlined in Exhibit A.

II. IN ADDITION, THE ENGINEER AGREES

A. To provide the various technical and professional services, equipment, material and transportation to perform the tasks as outlined in the SCOPE OF SERVICES (Exhibit A).

B. To attend meetings with the City and other local, state and federal agencies as necessitated by the SCOPE OF SERVICES.

C. To make available during regular office hours, all calculations, sketches and drawings such as the CITY may wish to examine periodically during performance of this agreement.

D. To save and hold CITY harmless against all suits, claims, damages and losses for injuries to persons or property arising from or caused by errors, omissions or negligent acts of ENGINEER, its agents, servants, employees, or subcontractors occurring in the performance of its services under this contract.

E. To maintain books, documents, papers, accounting records and other evidence pertaining to costs incurred by ENGINEER and, where relevant to method of payment, to make such material available to the CITY.

F. To comply with all Federal, State and local laws, ordinances and regulations applicable to the work, including Title VI of the Civil Rights Act of 1964, and to comply with the CITY'S Affirmative Action Program as set forth in Exhibit "B" which is attached hereto and adopted by reference as though fully set forth herein.

G. To accept compensation for the work herein described in such amounts and at such periods as provided in Article IV and that such compensation shall be satisfactory and sufficient payment for all work performed, equipment or materials used and services rendered in connection with such work.

H. To complete the services to be performed by ENGINEER within the time allotted for the PROJECT in accordance with Exhibit A; EXCEPT that the ENGINEER shall not be responsible or held liable for delays occasioned by the actions or inactions of the CITY or other agencies, or for other unavoidable delays beyond control of the ENGINEER.

I. Covenants and represents to be responsible for the professional and technical accuracies and the coordination of all designs, drawings, specifications, plans and/or other work or material furnished by the ENGINEER under this agreement. ENGINEER further agrees, covenants and represents, that all designs, drawings, specifications, plans, and other work or material furnished by ENGINEER, its agents, employees and subcontractors, under this agreement, including any additions, alterations or amendments thereof, shall be free from negligent errors or omissions.

J. ENGINEER shall procure and maintain such insurance as will protect the ENGINEER from damages resulting from the negligent acts of the ENGINEER, its agents, officers, employees and subcontractors in the performance of the professional services rendered under this agreement. Such policy of insurance shall be in an amount not less than $500,000.00 subject to a deductible of $10,000.00. In addition, a Workman's Compensation and Employer's Liability Policy shall be procured and maintained. This policy shall include an "all state" endorsement. Said insurance policy shall also cover claims for injury, disease or death of employees arising out of and in the course of their employment, which, for any reason, may not fall within the provisions of the Workman's Compensation Law. The liability limit shall be not less than:

Workman's Compensation – Statutory
Employer's Liability - $500,000 each occurrence.

Further, a comprehensive general liability policy shall be procured and maintained by the ENGINEER that shall be written in a comprehensive form and shall protect ENGINEER against all claims arising from injuries to persons (other than ENGINEER'S employees) or damage to property of the CITY or others arising out of any negligent act or omission of ENGINEER, its agents, officers, employees or subcontractors in the performance of the professional services under this agreement. The liability limit shall not be less than $500,000.00 per occurrence for bodily injury, death and property damage. Satisfactory Certificates of Insurance shall be filed with the CITY prior to the time ENGINEER starts any work under this agreement. In addition, insurance policies applicable hereto shall contain a provision that provides that the CITY shall be given thirty (30) days written notice by the insurance company before such policy is substantially changed or canceled.

K. To designate a Project Manager for the coordination of the work that this agreement requires to be performed. The ENGINEER agrees to advise the CITY, in writing, of the person(s) designated as Project Manager not later than five (5) days following issuance of the notice to proceed on the work required by this agreement. The ENGINEER shall also advise the CITY of any changes in the person designated Project Manager. Written notification shall be provided to the CITY for any changes exceeding one week in length of time.

III. THE CITY AGREES:

A. To furnish all available data pertaining to the PROJECT now in the CITY'S files at no cost to the ENGINEER. Confidential materials so furnished will be kept confidential by the ENGINEER.
B. To provide standards as required for the PROJECT; however, reproduction costs are the responsibility of the ENGINEER, except as specified in Exhibit A.
C. To pay the ENGINEER for his services in accordance with the requirements of this agreement.
D. To provide the right-of-entry for ENGINEER'S personnel in performing field surveys and inspections.
E. To designate a Project Manager for the coordination of the work that this agreement requires to be performed. The CITY agrees to advise, the ENGINEER, in writing, of the person(s) designated as Project Manager with the issuance of the notice to proceed on the work required by this agreement. The CITY shall also advise the ENGINEER of any changes in the person(s) designated Project Manager. Written notification shall be provided to the ENGINEER for any changes exceeding one week in length of time.
F. To examine all studies, reports, sketches, drawings, specifications, proposals and other documents presented by ENGINEER in a timely fashion.

IV. <u>PAYMENT PROVISIONS</u>

A. Payment to the ENGINEER for the performance of the professional services required by this agreement shall be made on the basis of the lump sum fee amount specified below:

Project No. 472 85007 $166,820.00

TOTAL $166,820.00

B. When requested by the CITY, the ENGINEER will enter into a Supplemental Agreement for additional services related to the PROJECT such as, but not limited to:
   1. Consultant or witness for the CITY in any litigation, administrative hearing, or other legal proceedings related to the PROJECT.
   2. Additional design services not covered by the scope of this agreement.
   3. Construction staking, material testing, inspection and administration related to the PROJECT.
   4. A major change in the scope of services for the PROJECT.

   If additional work should be necessary, the ENGINEER will be given written notice by the CITY along with a request for an estimate of the increase necessary in the not-to-exceed fee for performance of such additions. No additional work shall be performed nor shall

additional compensation be paid except on the basis of a Supplemental Agreement duly entered into by the parties.

V. THE PARTIES HERETO MUTUALLY AGREE:

A. That the right is reserved to the CITY to terminate this agreement at any time, upon written notice, in the event the PROJECT is to be abandoned or indefinitely postponed, or because of the ENGINEER'S inability to proceed with the work.

B. That the field notes and other pertinent drawings and documents pertaining to the PROJECT shall become the property of the CITY upon completion or termination of the ENGINEER'S services in accordance with this agreement; and there shall be no restriction or limitation on their further use by the CITY. Provided, however, that CITY shall hold ENGINEER harmless from any and all claims, damages or causes of action which arise out of such further use when such further use is not in connection with the PROJECT.

C. That the services to be performed by the ENGINEER under the terms of this agreement are personal and cannot be assigned, sublet or transferred without specific consent of the CITY.

D. In the event of unavoidable delays in the progress of the work contemplated by this agreement, reasonable extensions in the time allotted for the work will be granted by the CITY, provided, however, that the ENGINEER shall request extensions, in writing, giving the reasons therefor.

E. It is further agreed that this agreement and all contracts entered into under the provisions of this agreement shall be binding upon the parties hereto and their successors and assigns.

F. Neither the CITY'S review, approval or acceptance of, nor payment for, any of the work or services required to be performed by the ENGINEER under this agreement shall be construed to operate as a waiver of any right under this agreement or any cause of action arising out of the performance of this agreement.

G. The rights and remedies of the CITY provided for under this agreement are in addition to any other rights and remedies provided by law.

H. It is specifically agreed between the parties executing this contract, that it is not intended by any of the provisions of any part of this contract to create the public or any member thereof a third party beneficiary hereunder, or to authorize anyone not a party to this contract to maintain a suit for damages pursuant to the terms or provisions of this contract.

IN WITNESS WHEREOF, the CITY and the ENGINEER have executed this agreement as of the date first written above.

BY ACTION OF THE CITY COUNCIL

_____

Carl Brewer, Mayor

SEAL:

ATTEST:

_____

Karen Sublett, City Clerk

APPROVED AS TO FORM:

_____

Gary Rebenstorf, Director of Law

BAUGHMAN COMPANY, P.A.

_____

N. Brent Wooten, President

ATTEST:

_____

EXHIBIT "A"

SCOPE OF SERVICES

The ENGINEER shall furnish engineering services as required for the development of plans, supplemental specifications and estimates of the quantities of work for the PROJECT in the format and detail required by the City Engineer for the City of Wichita. Engineering plans shall be prepared per Attachment No. 1.

In connection with the services to be provided, the ENGINEER shall:

A. PHASE I – PLAN DEVELOPMENT

When authorized by the CITY, proceed with development of Plans for the PROJECT based on the preliminary design concepts approved by the CITY.

1. Field Surveys. Provide engineering and technical personnel and equipment to obtain survey data as required for the engineering design. Utility companies shall be requested to flag or otherwise locate their facilities within the PROJECT limits prior to the ENGINEER conducting the field survey for the PROJECT. Utility information shall be clearly noted and identified on the plans.
2. Storm Water Pollution Prevention. On projects that disturb one acre or more, the ENGINEER will prepare a storm water pollution prevention plan, prepare the necessary permit application(s) and include any provisions or requirements in the project plans and special provisions. The storm water pollution prevention plan shall also include submittal of a NOI prior to bidding; site-specific erosion control plan; and standard BMP detail sheets per Attachment No. 1.
3. Soils and Foundation Investigations. The CITY'S Engineering Division of the Department of Public Works shall provide subsurface borings and soils investigations for the PROJECT. However, the CITY may authorize the ENGINEER to direct an approved Testing Laboratory to perform subsurface borings and soils investigations for the PROJECT, which shall be reported in the format and detail required by the City Engineer for the City of Wichita. The Testing Laboratory shall be responsible for the accuracy and competence of their work. The ENGINEER'S contract with the Testing Laboratory shall provide that the Testing Laboratory is responsible to the City for the accuracy and competence of their work. The cost of soils and boring investigations shall be passed directly to the City of Wichita.
4. Review Preliminary Design Concepts. Submit preliminary design concepts for review with the City Engineer or his designated representative prior to progressing to detail aspects of the work unless waived by the City Engineer.
5. Drainage Study. When applicable, conduct a detailed study to explore alternative design concepts concerning drainage for the PROJECT. Present the findings in writing identifying recommendations to the CITY, including preliminary cost estimates, prior to development of final check plans. Such written findings and recommendations must be in a format which is self explanatory and readily understood by persons with average backgrounds for the technology involved.
6. Prepare engineering plans, plan quantities and supplemental specifications as required. Engineering plans will include incidental drainage where required and permanent traffic signing. The PROJECT'S plans and proposed special provisions shall address the requirements included in the City's Administrative Regulations 6.5, "Cleanup, Restoration or Replacement Following Construction." Also, final plans, field notes and other pertinent project mapping records are to be submitted per Attachment No. 1. The files are to be AutoCAD drawing files or DXF/DXB files. Layering, text fonts, etc. are to be reviewed and approved during the preliminary concept development phase of the design work. Text fonts other than standard AutoCAD files are to be included with drawing files. In addition to supplying the electronic files of the AutoCAD drawing files of the final plans, ENGINEER will also need to supply electronic files of the drawings in PDF format.

7. Prepare right-of-way tract maps and descriptions as required in clearly drawn detail and with sufficient reference to certificate of title descriptions. ENGINEER will perform all necessary survey work associated with marking the additional right-of-way easements. This shall include the setting monuments of new corners for any additional right-of-way and a one time marking of the right-of-way for utility relocations.
8. Identify all potential utility conflicts and provide prints of preliminary plans showing the problem locations to each utility. ENGINEER shall meet with utility company representatives to review plans and coordinate resolution of utility conflicts prior to PROJECT letting or, if approved by the City Engineer, identify on plans conflicts to be resolved during construction. Provide to CITY utility status report identifying utility conflicts with dates by which the conflicts will be eliminated with signed utility agreements from each involved utility company. ENGINEER shall meet with involved utility company/ies and project contractor to resolve any conflicts with utilities that occur during construction that were not identified and coordinated during design.
9. All applicable coordinate control points and related project staking information shall be furnished on a map on the plans, as well on CD-ROM, as a text file, along with the project PDF's. When applicable, this coordinate information will be used by the CITY for construction staking purposes.
10. All shop drawings submitted by the contractor for the PROJECT shall be reviewed and, when acceptable, approved for construction by the ENGINEER for the PROJECT.
11. The ENGINEER shall meet with effected property owners, along with City staff, at a pre-construction Public Information Meeting, as arranged by the City, to explain project design, including such issues as construction phasing and traffic control.
12. The ENGINEER shall complete permanent monumentation of all new R/W, complete and submit all necessary legal documentation for same.
13. Permits. The ENGINEER shall prepare any and all necessary permits for this PROJECT, such as the preparation of applications for U.S. Army Corps of Engineers (404) permits, Division of Water Resources permit, Kansas Department of Wildlife and Parks permit and Kansas Department of Health and Environment permit. Also if requested by the CITY, obtain construction approval from the U.S. Army Corps of Engineers and assist the CITY in coordinating the archaeological review of the PROJECT.
14. Complete and deliver field notes, plan tracings, specifications and estimates to the CITY within the time allotted for the PROJECTS as stipulated below.
    a. Plan Development for the paving improvements by March 5, 2012.
       (Project No. 472 85007).

Attachment No. 1 to Exhibit "A" – Scope of Services

Plan Submittal

Water projects plans shall be submitted with (1) set of mylar plans; and a CD of the .dwgs and .pdfs. This includes projects that have the water plans incorporated into that project, for which the cover sheet should also be included.

Storm Sewer, Sanitary Sewer and Paving plans shall be submitted in a .dwg and .pdf format on a CD.

Paper plan submittals for KDOT projects (i.e. Field Check, ULCC, Final Check, etc.) will not change and the cover sheet mylar will be required for all projects for signature purposes. Projects that have water lines incorporated into the project are required to have those pages in a mylar format. The complete project must be submitted in a scalable .pdf format.

In addition, two (2) sets of 11"x17" plans will be submitted at the time of final .pdf submittal for ALL projects, regardless of the type.

Storm Water Pollution Prevention

For any project disturbing one acre of ground or more, the design Consultant must prepare a Notice of Intent and a Storm Water Pollution Prevention Plan and submit them to the KDHE for approval. Complete copies of the approved NOI and SWP3 must be provided to the City, prior to bidding. One hard copy should be provided to the project engineer upon approval, one electronic copy should be included with your transmittal of PDF plan files, and one additional electronic copy should be sent to the attention of Mark Hall at the following address:

City of Wichita
Environmental Services
1900 E. 9th St. North
Wichita, KS 67214

THIS INCLUDES **ALL** PROJECTS DISTURBING ONE ACRE OR MORE – I.E. NEW DEVELOPMENT, ARTERIAL STREETS, DIRT STREETS, BIKE PATHS, SEWER MAINS, ETC.

The City of Wichita will, under no circumstance, bid any project without first receiving copies of the KDHE approved NOI and SWP3.

The design of all City of Wichita construction projects must include the development of a site-specific erosion control plan. The site-specific erosion control plan must be included in the project plans. Every component and requirement of the erosion control plan must be separately and accurately accounted as a measured quantity bid item in the engineer's estimate.

Please note that careful consideration must be given to the transition of BMP maintenance responsibilities throughout the course of multi-phased projects. All intended responsibilities must be clearly demonstrated by the bid items. For example, if it is intended that the contractor of a subsequent waterline project be responsible for the maintenance of silt fence installed with a preceding sanitary sewer project, a measured quantity bid item must be submitted for x-lf of silt fence maintenance.

The City's current BMP standard detail sheets shall be included in all plans. These five sheets must be included in every plan set developed for the City of Wichita, regardless of project size.

132019

First Published in the Wichita Eagle on September 16, 2011

RESOLUTION NO. 11-219

A RESOLUTION AUTHORIZING THE ISSUANCE OF BONDS BY THE CITY OF WICHITA AT LARGE TO IMPROVE THE REDBUD MULTI-USE PATH (472-85007).

BE IT RESOLVED BY THE CITY COUNCIL OF THE CITY OF WICHITA, KANSAS;

SECTION 1. That the City of Wichita finds it necessary to make certain related improvements as follows:

The design and acquisition of right-of-way for a multi-use path along the rail banked Frisco right-of-way between the I-135 Freeway and Oliver.

SECTION 2. The total cost is estimated not to exceed $250,000, exclusive of the cost of interest on borrowed money, with the total paid by the issuance of bonds by the City of Wichita at large.

SECTION 3. That the advisability of said improvements is established and authorized by City of Wichita Charter Ordinance No. 156.

SECTION 4. That this resolution shall take effect and be in force from and after its passage and publication once in the official city paper.

PASSED by the governing body of the City of Wichita, Kansas, this 13th day of September, 2011.

_____
CARL BREWER, MAYOR

ATTEST:

_____
KAREN SUBLETT, CITY CLERK

(SEAL)

APPROVED AS TO FORM:

_____
GARY REBENSTORF, DIRECTOR OF LAW

City of Wichita
City Council Meeting
September 13, 2011

TO: Mayor and City Council

SUBJECT: Supplemental Agreement No. 2 for Design Services for the Arkansas River Bike Path (between Galena and George Washington Boulevard) (District III)

INITIATED BY: Department of Public Works & Utilities

AGENDA: Consent

Recommendation: Approve Supplemental Agreement No. 2.

Background: On December 13, 2005, the City entered into an agreement with K.E. Miller Engineering, P.A. (K.E. Miller) to design the Arkansas River Bike Path, between Galena and George Washington Boulevard. The fee was $143,900. On March 22, 2011, the City Council approved Supplemental Agreement No. 1 in the amount of $49,147, bringing the total design contract fee to $193,047.

Analysis: At submittal of final plans, KDOT advised that the proposed on-street alignment adjacent to Spirit would not be allowed. This design was a result of the City not being successful in efforts to acquire necessary right-of-way from Spirit, without significant cost and/or time delay. As suggested by KDOT, the design is being revised to relocate the existing curb line of Turnpike Drive, such that an off-street path can then be constructed within the existing right-of-way. Supplemental Agreement No. 2 has been prepared to authorize the additional design services.

Financial Considerations: The fee for Supplemental Agreement No. 2 is $6,100. K.E. Miller's total design service fee will be $199,147. The funding source is General Obligations bonds.

Goal Impact: This project addresses the Efficient Infrastructure goal by constructing a multi-use path for bike riders and pedestrians.

Legal Considerations: Supplemental Agreement No. 2 has been approved as to form by the Law Department.

Recommendation/Action: It is recommended that the City Council approve Supplemental Agreement No. 2 and authorize the necessary signatures.

Attachments: Supplemental Agreement No. 2.

SUPPLEMENTAL AGREEMENT #2

TO THE

AGREEMENT FOR PROFESSIONAL SERVICES DATED DECEMBER 15, 2005

BETWEEN

THE CITY OF WICHITA, KANSAS

PARTY OF THE FIRST PART, HEREINAFTER CALLED THE

"CITY"

AND

K.E. MILLER ENGINEERING, P.A.

PARTY OF THE SECOND PART, HEREINAFTER CALLED THE

"ENGINEER"

WITNESSETH:

WHEREAS, there now exists a Contract (dated December 15, 2005) between the two parties covering engineering services to be provided by the ENGINEER in conjunction with the construction of improvements to the **ARKANSAS RIVER/GYPSUM CREEK BIKE PATH CONNECTION (**Project No. 472 84319)**.**

WHEREAS, Paragraph IV. B. of the above referenced Contract provides that additional work be performed and additional compensation be paid on the basis of a Supplemental Agreement duly entered into by the parties, and

WHEREAS, it is the desire of both parties that the ENGINEER provide additional services required for the PROJECT and receive additional compensation (as revised herein):

NOW THEREFORE, the parties hereto mutually agree as follows:

A. PROJECT DESCRIPTION

The description of the improvements that the CITY intends to construct and thereafter called the "PROJECT" as stated on page 1 of the above referenced agreement is hereby amended to include the following:

Multi Use Path from Garvey Park to Plainview Park
(472-84932, OCA 707030)
(see Exhibit "A")

At submittal of final plans, KDOT advised that the proposed on-street alignment adjacent to Spirit would not be allowed. This design was a result of the City's inability to acquire necessary right-of-way from Spirit, without significant cost and/or time delay. As suggested by KDOT, the design is being revised to relocate the existing curb line of Turnpike Drive, such that an off-street path can then be constructed within existing right-of-way.

B. PAYMENT PROVISIONS

The fee in Section IV. A. shall be amended to include the following:

Payment to the ENGINEER for the performance of the professional services as outlined in this supplemental agreement will increase the total contract by **$6,100.00**.

C. PROVISIONS OF THE ORIGINAL CONTRACT

The parties hereunto mutually agree that all provisions and requirements of the existing Contract, not specifically modified by this Supplemental Agreement, shall remain in force and effect.

IN WITNESS WHEREOF, the CITY and the ENGINEER have executed this Supplemental Agreement as of this _____ day of _____, 2011.

BY ACTION OF THE CITY COUNCIL

_____
Carl Brewer, Mayor

ATTEST:

_____
Karen Sublett, City Clerk

Approved as to Form:

_____
Gary Rebenstorf, Director of Law

K.E. MILLER ENGINEERING, P.A.

_____
(Name and Title)

ATTEST:

_____

Agenda Item No. II-9a

City of Wichita
City Council Meeting
September 13, 2011

TO: Mayor and City Council Members

SUBJECT: Change Order for Meridian Dog Park – Permeable Paver Parking Lot (District VI)

INITIATED BY: Department of Park and Recreation

AGENDA: Consent

Recommendations: Approve the Change Order.

Background: On September 14, 2010, the City Council approved a project to construct a dog park in Meridian Park, located south of 21st Street North on the west side of Meridian. Planned improvements include fencing, connecting walks, dog waterer/drinking fountain units and off-street parking. On June 21, 2011, the City Council awarded a contract for construction to Danco Enterprises, Inc.

Following the contract award, the Stormwater Management Division of Public Works and Utilities proposed that the concrete off-street parking surface be replaced with permeable pavers to reduce stormwater runoff and act as a demonstration of Best Management Practices (BMPs). Additional funds for the permeable pavers will be provided by a Stormwater budget established for BMP demonstrations.

Analysis: This project will serve as a working example of stormwater runoff mitigation. Meridian Park is an easily accessible, highly visible location for this educational installation. The public will be able to view and assess the benefits of permeable pavers over concrete and asphalt surfaces. This new lot on the north side of Wichita will compliment the south-side BMP demonstration parking lot located by the Water Center (Herman Hill Park), which is partially constructed of a porous material and has an adjoining rain garden.

Financial Considerations: The Park and Recreation Department will partner with Stormwater by contributing the amount originally budgeted for the concrete paving. The additional cost for the permeable paving system is $37,051.82 which will be provided by an existing project budget established for BMP demonstrations in the Stormwater Management Division.

Goal Impact: This project addresses the Quality of Life goal by constructing an environmentally-friendly parking lot that will also serve as an educational example for future installations.

Legal Considerations: The Law Department has approved the Change Order as to form.

Recommendation/Actions: It is recommended that the City Council approve the Change Order and authorize the necessary signatures.

Attachments: Change Order.

PARK & RECREATION DEPARTMENT

August 24, 2011

CHANGE ORDER

To: Danco Enterprises, Inc.

Project: Meridian Dog Park

Change Order No.: 1
Purchase Order No.: 130520
CHARGE TO OCA No.: 660531

Project No.: 397245, 397247, 562-857107
OCA No.: 785169, 785171, 660531
PPN:

Please perform the following extra work at a cost not to exceed $ 37,051.82

Additional Work: Substitute permeable paving and appropriate base for concrete parking surface and base in off-street parking lot, adjust layout as per revised plans.

Reason for Additional Work: To reduce stormwater runoff, provide a demonstration of permeable paving and Best Management Practices in accordance with Stormwater Management.

Item	Qty	Unit Price	Extension
Permeable Paving System	1	$37,051.82	$37,051.82

CIP Budget Amount: $155,000.00 (785169)
$120,000 (785171)
$457,789 (660531)
Consultant: Certified Engineering Consultants, P.A.
Exp. & Encum. To Date: $7,910.00 (design)
$176,633.60 (const.)
CO Amount: $ 37,051.82
Unencum. Bal. After CO: Varies by account

Original Contract Amt.: $176,633.60

Current CO Amt.: $37,051.82
Amt. of Previous CO's: $ -0-
Total of All CO's: $37,051.82
% of Orig. Contract / 25% Max.: 21%
Adjusted Contract Amt.: $214,685.42

Recommended By:

Larry D. Hoetmer, ASLA — Date
Principal Planner

Approved:

Douglas Kupper, CPRP — Date
Director of Park and Recreation

Approved:

Dan Slusser — Date
Danco Enterprises, Inc.

Approved:

Alan King — Date
Director of Public Works & Utilities

Approved as to Form:

Gary Rebenstorf — Date
Director of Law

By Order of the City Council:

Carl Brewer — Date
Mayor

Attest:_____
City Clerk

Agenda Item No. II-9b

City of Wichita
City Council Meeting
September 13, 2011

TO: Mayor and City Council

SUBJECT: Change Order No. 2 - City Hall Landscape and Security Enhancements (District VI)

INITIATED BY: Department of Public Works & Utilities

AGENDA: Consent

- -

Recommendation: Approve Change Order No. 2.

Background: In September 2003, the City Council approved a contract with Schaefer Johnson Cox Frey Architecture (SJCF) for architectural services related to enhancing City Hall security through a redesign of first floor, exterior landscaping features and access to the auto service tunnel. On September 21, 2004, the City Council authorized expanding the scope of work to include parking lot modifications and a redesign of the atrium. On May 24, 2005, the City Council authorized expanding the project again to replace the emergency generator and install it at a new exterior location. On August 4, 2009, the City Council approved a contract with Key Construction to complete the final phase of the project which included parking lot modifications, security bollards, and landscaping improvements on the entire City Hall campus. During construction, several items were added or changed to cover unforeseen issues during this final phase.

Analysis: The additional work included in Change Order No. 2 consists of, conduit change from IMC to Rigid in the parking garage, miscellaneous electrical repairs and upgrades discovered under existing concrete slabs, check valves added at chiller pumps, bracing of hydronic piping located in sub-basement, additional hand rail, top soil amendment, additional bollards, and additional sidewalk replacement.

Items included in Change Order No. 2 that resulted in a credit to the City consists of the removal of a parking connection between surface lot and drive, liquidated damages incurred by the contractor, and the remainder of the signage allowance used for the project.

Financial Considerations: The total cost of the additional work is $48,051. The original contract amount is $3,196,000. This change order in addition to Change Order No. 1 represents 3.6% of the original contract amount. Funding is available within the existing project budget.

Goal Impact: This change order addresses the Safe and Secure Community goal by maintaining and improving public safety.

Legal Considerations: Change Order No. 2 has been approved as to form by the Law Department.

Recommendations/Actions: It is recommended that the City Council approve Change Order No. 2 and authorize the necessary signatures.

Attachments: Change Order No. 2.

August 1, 2011

PUBLIC WORKS-ENGINEERING

CHANGE ORDER

To: Key Construction
741 West Second
Wichita, Kansas 67203

Project: City Hall Security & Landscape

Change Order No.:2
Purchase Order No.: 930874
CHARGE TO OCA No.:792531

Project No.: 435452
OCA No.:792531
PPN:

Please perform the following extra work at a cost not to exceed $ 48,051.00

Additional Work:

A. General Conditions required due to delays in beginning project.
B. Add pressure differential switch to on chillers.
C. Manual fill bypass valve and hose bib.
D. Conduit change from IMC to Rigid in parking garage.
E. Misc. electrical repairs and upgrades.
F. Check Valves at pumps.
G. Insulation at pump room access hatches.
H. Bracing of hydronic pipe in sub-basement.
I. Additional hand rail on each side of west tunnel due to curb height.
J. Top soil amendment to reach acceptable ph levels.
K. Additional bollards at west end of parking garage.
L. Sidewalk replacement at planters.
M. Remove parking connection between surface lot and drive.
N. Liquidated damages incurred.
O. Signage allowance credit.

Reason for Additional Work:

A. Shortly after project bid date there were significant delays on two separate occasions. The first delays were due to administrative decisions regarding project scope and feasibility. The second and more significant delay occurred when a conflict was discovered between the existing fire protection service main and the excavation of the cooling tower foundations at the new locations. During the time required to resolve the conflict and receive approval from WFD, the contractor was on site, awaiting the go-ahead t begin excavation.
B. At the request of City building operators, this switch was added to better regulate and track water pressure at the chillers.
C. At the request of City building operators, this valve and hose bib was added to have an alternate source to add domestic water to the cooling tower reservoir should the need arise.
D. Due to a conflict in the specifications, contractor had bid and planned on using IMC for the electrical runs through the parking garage. The City electricians require any conduit run in the garage to be rigid conduit. A compromise was reached with the electrical contractor and the City agreed to pay the difference in material cost only, with no mark up for overhead or profit on the price difference.
E. During excavation and demolition of existing sidewalk and planters, it was discovered some existing conduit runs had rusted to the point wires and control cables were exposed to the elements. These requested conduits were replaced with new plastic conduit, and wires and cabling re-pulled as necessary.
F. A design oversight allowed the water in the hydronic piping to drain back to the cooling tower pits when the pumps were not running. This condition was the root cause of the severe pipe shifting and movement in the sub basement. It also caused the undersized cooling tower

pit to overflow, and large amounts of treated water to be pumped out into the sanitary sewer. A large portion of this cost will be recovered from the design consultant's contract, and the City will be responsible for the materials costs only.

G. The metal access doors located above the pumps in the new pump room for convenience of pump replacement were not specified to be insulated. During extreme cold weather, the doors would accumulate a great deal of condensation due to the warm temperature of the pump room, and the extreme cold of the exterior side of the doors. The condensation would then drip on the electrical panels located adjacent to the pumps. Insulation was added to the interior side of the doors, to prevent the condensation from forming.

H. During pump cycles of the chillers, the sudden surge and large quantity of water traveling through the 10" condenser pipe would cause a sudden shifting of the pipe, and constant shaking while the pumps continued to run. The pipe was braced to the existing structure of the building to prevent this movement.

I. The new elevations of the walkway on the south west side of City Hall created a drop off of approximately 18" at the highest point along the entrance of the west end of the tunnel. Although not a code requirement, it was determined to be a safety issue, and a hazard to citizens visiting City Hall that could possibly miss the drop off and unexpectedly step off the curb, causing a fall or other injury. To prevent this, the existing handrail was extended creating a barrier at the drop off locations.

J. Specifications called for testing of the top soil being imported to the project for proper ph levels. The topsoil did not meet the required ph levels for supporting health fescue turf, so it was amended with Sulfur to bring the ph within the optimal range.

K. At the west end of the parking garage adjacent to the new employee entrance was installed; there remained a significant gap between the parking garage wall and the secured gate. City staff directed contractor to install three additional bollards in this gap to complete the secured perimeter.

L. The existing planters located at various locations on campus required much more extensive demolition that what was shown on drawings, and required a large amount of sidewalk to be removed in order to remove planter footings. This sidewalk replacement was not in the original bid.

M. Property Management and parking service vendor requested the additional connection drive between the surface lots located at the west end of the lot be eliminated due to possible traffic flow conflicts.

N. Liquidated damages assessed to the contractor from the City at the rate of $100 per day over contract completion date.

O. The amount of the $20,000 allowance for site signage remaining.

Item	Negot'd/Bid	Qty	Unit Price	Extension
(A) Contractor General Conditions	Bid	1	$32,272.00	$32,272.00
(B) Pressure Differential Switch	Bid	1	$871.00	$871.00
(C) Manual Fill Hose Bib	Bid	1	$965.00	$965.00
(D) Conduit Change	Negot'd	1	$2,885.00	$2,885.00
(E) Misc. Electrical Improvements	Negot'd	1	$3,388.00	$3,388.00
(F) Check Valves	Negot'd	1	$12,699.00	$12,699.00
(G) Insulation Pump Room Doors	Negot'd	1	$293.00	$293.00
(H) Hydronic Pipe Bracing	Negot'd	1	$8,856.00	$8,856.00
(I) Additional Hand Rails	Negot'd	1	$4,021.00	$4,021.00
(J) Topsoil Amendment	Negot'd	1	$4,187.00	$4,187.00
(K) Additional Bollards	Negot'd	1	$500.00	$500.00
(L) Sidewalk Replacement	Negot'd	900sf	$3.00	$3.00
(M) Remove Parking Connection	Negot'd	1	($3,128.00)	($3,128.00)
(N) Liquidated Damages	Negot'd	160 days	($16,000.00)	($16,000.00)
(O) Signage Allowance Credit	Bid		($6,458.00)	($6,458.00)

CIP Budget Amount: $3,558,954.09	Original Contract Amt.: $3,196,000.00
Consultant: SJCF	Current CO Amt.: $48,051.00
Exp. & Encum. To Date: $3,266,195.00	**Amt. of Previous CO's: $70,195.00**
	Total of All CO's: $118,246.00
CO Amount: $48,051.00	**% of Orig. Contract: 3.6%**
Unencum. Bal. After CO: $244,708.09	**Adjusted Contract Amt.: $3,314,246.00**

Recommended By:

_____ _____
Jeff Myers Date
Project Manager

Approved:

_____ _____
Ed Martin Date
Building Services Manager

Approved:

_____ _____
Chris Beasley Date
Key Construction

Approved:

_____ _____
Jim Armour, P.E. Date
City Engineer

Approved:

_____ _____
Alan King Date
Director of Public Works & Utilities

By Order of City Council:

_____ _____
Carl Brewer Date
Mayor

Approved as to Form:

_____ _____
Gary Rebenstorf Date
Director of Law

Attest:_____
City Clerk

City of Wichita
City Council Meeting
September 13, 2011

TO: Mayor and City Council

SUBJECT: Change Order No. 5- ASR Recharge Well Support (All Districts)

INITIATED BY: Department of Public Works & Utilities

AGENDA: Consent

Recommendation: Approve Change Order No. 5.

Background: On August 24, 2010, the City Council approved a contract with Dondlinger & Sons Construction Co. to reconstruct existing water wells to serve the Aquifer Storage and Recovery Facility. After system testing, it was discovered that sand in old waterlines connecting the wells was pushed into and filled two of the wells. A change order has been prepared to address the additional work needed to remove the sand from the wells and retrofit the system to prevent a future occurrence.

Analysis: The additional work consists of redeveloping the two wells and installing testing taps on all 30 wells in the area. Two sand testers will be acquired that can be attached to monitor each well system for sand infiltration.

Financial Considerations: The total cost of the additional work is $22,358, with the total paid by the Water Utility. The original contract amount is $15,893,500. This change order plus previous change orders represents 0.26% of the original contract amount. Funding is available within the existing project budget.

Goal Impact: The project addresses the Efficient Infrastructure goal by providing a needed water supply.

Legal Considerations: The Law Department has approved the change order as to form. The change order amount is within the 25% of construction contract cost limit set by City Council policy.

Recommendation/Action: It is recommended that the City Council approve Change Order No. 5 and authorize the necessary signatures.

Attachments: Change Order No. 5.

August 1, 2011

PUBLIC WORKS-ENGINEERING

CHANGE ORDER

To: Dondlinger & Sons Construction Co.

Project: W-549-011 Recharge Well Support Facilities. ASR Bid Package G1

Change Order No.:1005
Purchase Order No.: 030683
CHARGE TO OCA No.:633969

Project No.: 788011
OCA No.:633969
PPN:788011

Please perform the following extra work at a cost not to exceed $ 22,358.00

Additional Work:
Redevelop wells MR 43 and MR 45. Add Rossum sand testing taps to piping at all 30 wells locations. Purchase 2 Rossum Sand testers.

Reason for Additional Work:
Sand in the existing piping was pushed down into the new recharge wells when testing recharge capability. It was not known that there was sand in the old existing pipelines at the time of the testing.

Sand was cleared from pipeline by a separate change order on a pipeline project.

To prevent future occurrence, staff recommends adding taps at all well locations to allow a connection for testing equipment. Two sand testers will be purchased to periodically monitor sand at the 30 recharge sites. Fit and equip all 30 sites to alternately use the 2 testers.

Item	Negot'd/Bid	Qty	Unit Price	Extension
1. Redevelop Wells (2)	Negot'd	1 ls	$15,888.00	$15,888.00
2. Install Test Taps	Negot'd	30 ea	$ 153.00	$ 4,590.00
3. Rossum Testers	Negot'd	2 ea	$ 940.00	$ 1,880.00
			TOTAL	**$22,358.00**

CIP Budget Amount: $26,500,000.00

Consultant: RW Beck and Associates
Total Exp. & Encum. To Date: $26,252,059.42
CO Amount: $22,358.00
Unencum. Bal. After CO: $225,582.58

Original Contract Amt.: $15,893,500.00

Current CO Amt.: $22,358.00
Amt. of Previous CO's: $11,093.00
Total of All CO's: $33,451.00
% of Orig. Contract: .14%
Adjusted Contract Amt.: $15,926,951.00

Recommended By:

Dennis H. Sanders — Date
Construction Admin Mgr.

Approved:

Stan Breitenbach, P.E. — Date
Special Projects Engineer

Approved:

_____ _____
Contractor Date

Approved:

_____ _____
Jim Armour, P.E. Date
City Engineer

Approved:

_____ _____
Alan King Date
Director of Public Works & Utilities

Approved as to Form:

_____ _____
Gary Rebenstorf Date
Director of Law

By Order of City Council:

_____ _____
Carl Brewer Date
Mayor

Attest:_____
City Clerk

CITY OF WICHITA
City Council Meeting
September 13, 2011

TO: Mayor and City Council

SUBJECT: Partial Acquisition of 1552 South Broadway for the Harry and Broadway Intersection Improvement Project (Districts I and III)

INITIATED BY: Office of Property Management

AGENDA: Consent

Recommendation: Approve the acquisition.

Background: The City Council has approved the design concept and proposed project to improve the intersection of Harry and Broadway. The project will require the acquisition of all or part of eleven tracts. The improvements include adding left turn lanes, improving the sidewalks, improving the storm sewer system and landscaping. The property located at 1552 South Broadway is improved with a retail strip center building. Along Broadway, it is necessary to acquire a 1,365 square foot strip of land as road right-of-way. A 1,100 square foot temporary easement during construction is also required. No improvements are impacted, however; there is a loss of five parking stalls and the advertising signs will have to be relocated.

Analysis: The acquisition was appraised at $23,811. This amount includes $10,920 ($8.00 per square foot) for the right of way being acquired, $3,297 ($2.99 per square foot) for the temporary easement, and $9,594 for damages to the remainder of the site due to lost parking and costs to reconfigure the onsite parking. The owner accepted the offer of the appraised amount. In addition, there are two business signs which must be relocated. The cost to relocate these signs is estimated is $19,735.

The owner did request the option to purchase the north 10 feet of the property adjacent to the south, which the City has acquired for the intersection project. The option parcel is surplus to the needs of the project. The option price is $10,920 ($8.00 per square foot) which equates to the price the City is paying for the subject right of way.

Financial Considerations: The funding source for the project is General Obligation Bonds. A budget of $44,746 is requested. This amount is comprised of $23,811 for the easement, $19,735 for the signs, and $1,200 for the closings costs and other administrative fees.

Goal Impact: The acquisition of this parcel is necessary to ensure Efficient Infrastructure by improving the traffic flow through a major transportation corridor.

Legal Considerations: The Law Department has approved the agreement as to form.

Recommendation/Action: It is recommended that the City Council 1) Approve the budget; 2) Approve the agreement; 3) Authorize all necessary signatures.

Attachments: Aerial map, tract maps and real estate agreement.

PROJECT: Broadway and Harry

DATE: August 15, 2011

COUNTY: Sedgwick

TRACT NO.: 1

CITY OF WICHITA, KANSAS
A MUNICIPAL CORPORATION

CONTRACT FOR CONVEYANCE OF REAL ESTATE BY WARRANTY DEED

THIS AGREEMENT made and entered into this 15th day of August, 2011 by and between:

Joanne and Kun S. Lee, and the City of Wichita, State of Kansas,

WITNESSETH, For consideration as hereinafter set forth, the landowner(s) hereby agree(s) to convey unto the City, their duly authorized agents, contractors and assigns the right to enter upon the following described land in Sedgwick County to wit:

B 05183 & B 05188 Right of Way

The west 7.50 feet of the south 47.00 feet of Lot 9, AND the west 7.50 feet of Lot 10, AND the west 7.50 feet of the north 21.00 feet of Lot 11, Zimmerly's Addition to the City of Wichita, Sedgwick County, Kansas.

It is understood and agreed that landowner(s) is/are responsible for all property taxes on the above described property accrued prior to the conveyance of title to the City. In the event of relocation, landowner(s) hereby expressly agrees and covenants that they will hold and save harmless and indemnify the City and its authorized representatives from any and all costs, liabilities, expenses, suits, judgements, damages to persons or property or claims of any nature whatsoever which may occur during the time the City becomes legally entitled to the property until the relocation is completed. In no event will the land owner(s) be required to move until the City becomes legally entitled to the property.

The City agrees to purchase the above described real estate, and to pay therefore, the following amount within 60 days after the warranty deed conveying said property free of encumbrance has been delivered.

Approximately 1,365 sq. ft. for right-of-way	$ 10,920.00
1,100 sq. ft. for Temporary Easement	$ 3,297.00
Cost to Cure:	$ 6,930.00
Damages including but not limited to: _	$ 2,664.00
TOTAL	**$ 23,811.00**

Joanne and Kun S. Lee (Seller), shall have the option to purchase for Ten Thousand Nine Hundred and Twenty Dollars and Zero Cents ($10,920.00) a portion of the south 93 feet of the west 157.5 feet of Lot 11, Zimmerly's Addition to Wichita, Sedgwick County, Kansas (Option Parcel). Said Option Parcel shall lie adjacent to that portion of Lot 11 owned by Seller and shall be approximately 10 feet north to south by 145 feet east to west. The approximate location of the Option Parcel is shown on the attached exhibit. The exact location and description shall be determined upon exercise of said option to purchase. The option must be exercised no sooner than the completion of the proposed intersection improvement project and no later than 12 months after said completion.

The cost for the relocation of the two on-premise signs will be resolved as a separate issue. Seller will be paid $13, 002.85 when the Don's Restaurant sign is removed from the new right of way, and $6,730.44 when the Plan Life Wise / RT'S ALIBI sign is removed from the new right of way.

It is understood and agreed that the above stated consideration for said real estate is in full payment of said tract of land and all damages arising from the transfer of said property and its use for the purposes above set out.

IN WITNESS WHEREOF The parties have hereunto signed this agreement the day and year first above written.

LANDOWNERS:

Joanne Lee

Kun S. Lee

Rev. 9-94
Form No. 1716

D. O. T.

City of Wichita
County of Sedgwick
State of Kansas

BUYER:
City of Wichita, KS, a municipal corporation

_____
Carl Brewer, Mayor

ATTEST:

_____
Karen Sublett, City Clerk

Approved as to form:

_____
Gary E. Rebenstorf, Director of Law

MEMORANDA

Exact and full name of owner, as it appears of record:

Joanne and Kun S. Lee

If mortgage or other liens, show names of holders:

REMARKS:

RECOMMENDED BY: Dennis Keegan, Acquisition Agent

Rev. 9-94
Form No. 1716

D. O. T.

EXHIBIT - OPTION PURCHASE

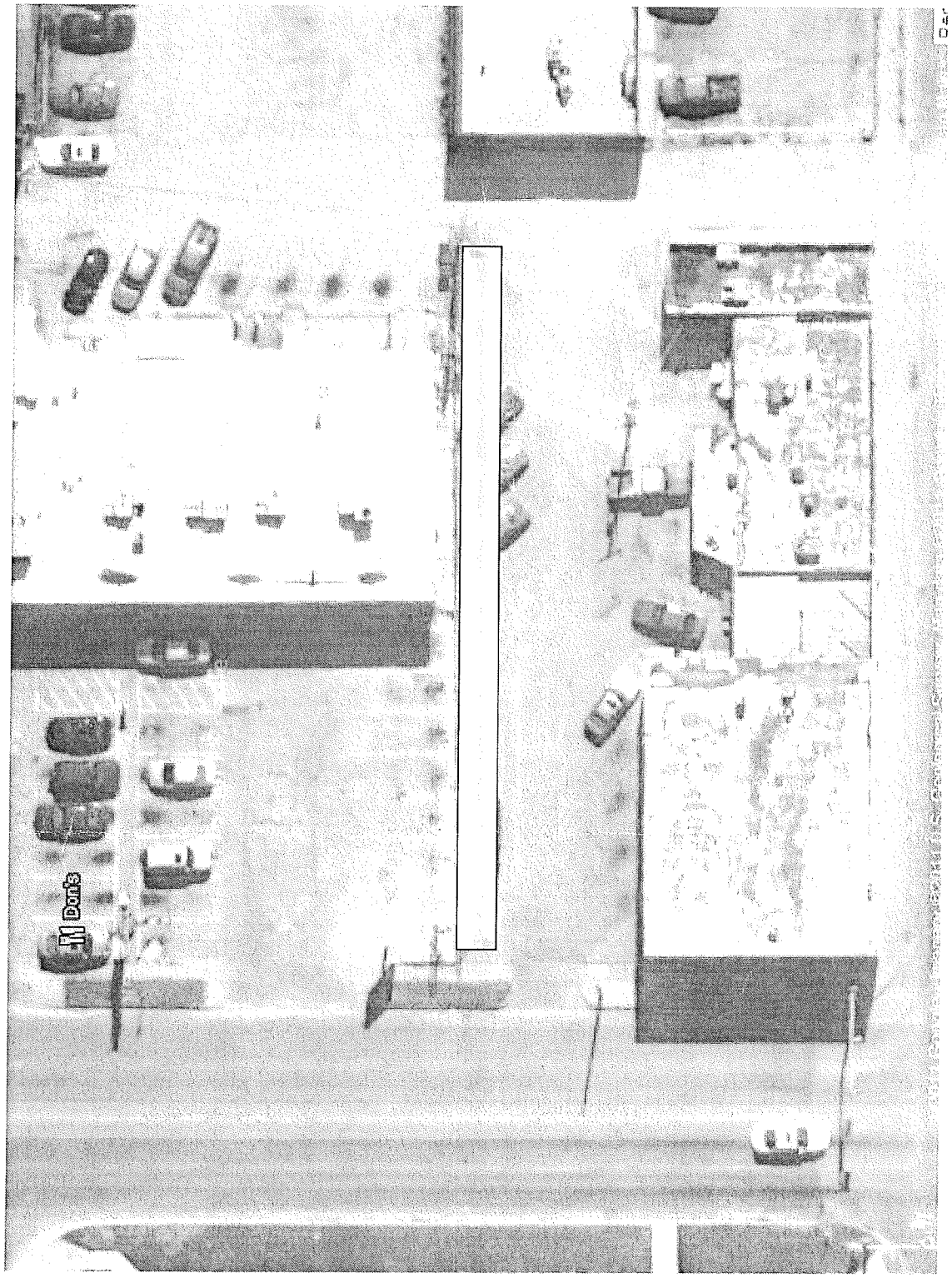

N

RIGHT OF WAY EXHIBIT #1

JOANNE & KUN S. LEE
4326 N. SPYGLASS CT.
WICHITA, KS 67226

B 05182, B 05183 & B 05188

Right Of Way Area: 1,365 Sq. Ft.±
0.03 Acres

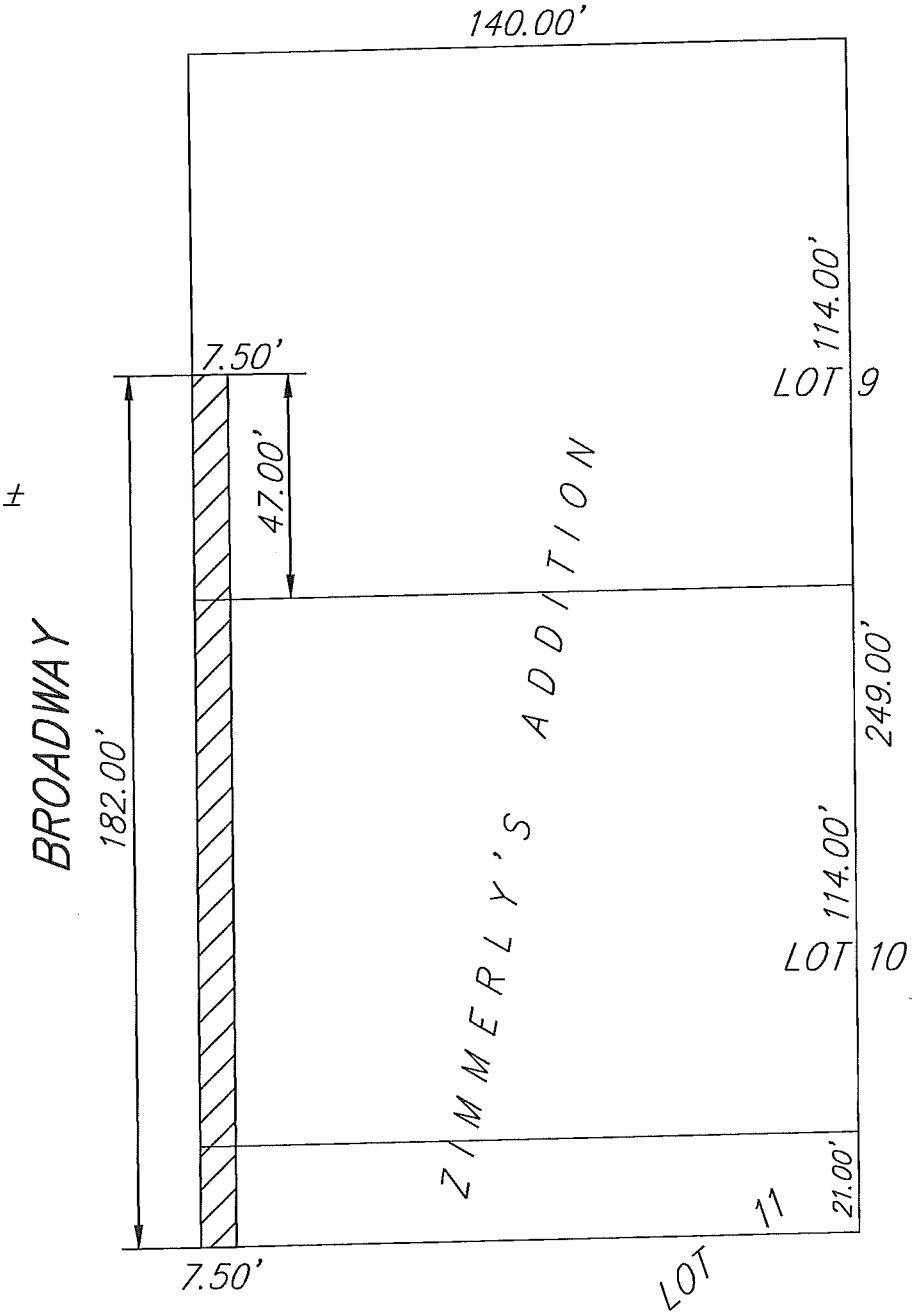

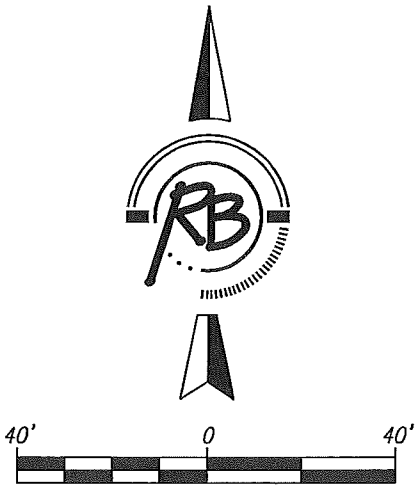

Ruggles & Bohm, P.A.
Engineering, Surveying, Land Planning
924 North Main
Wichita, Kansas 67203
www.rbkansas.com
(316) 264-8008
(316) 264-4621 fax
E-mail: info@rbkansas.com

3576T

B 05183 & B 05188 Right of Way

The west 7.50 feet of the south 47.00 feet of Lot 9, AND the west 7.50 feet of Lot 10, AND the west 7.50 feet of the north 21.00 feet of Lot 11, Zimmerly's Addition to the City of Wichita, Sedgwick County, Kansas.

WILLIAM K. CLEVENGER
LICENSED
LS-1437
9/28/10
KANSAS
LAND SURVEYOR

TEMPORARY CONSTRUCTION EASEMENT EXHIBIT #7

JOANNE & KUN S. LEE
4326 N. SPYGLASS CT.
WICHITA, KS 67226

B 05182, B 05183 & B 05188

Right Of Way Area: 1,100 Sq. Ft.±
0.03 Acres

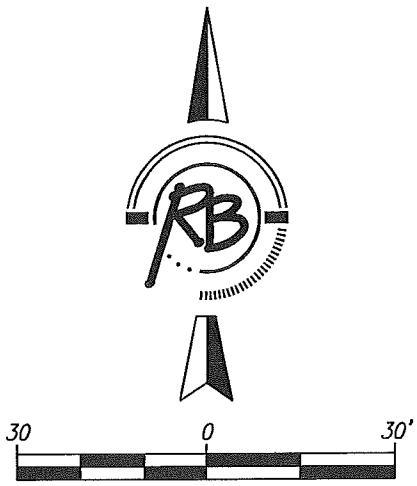

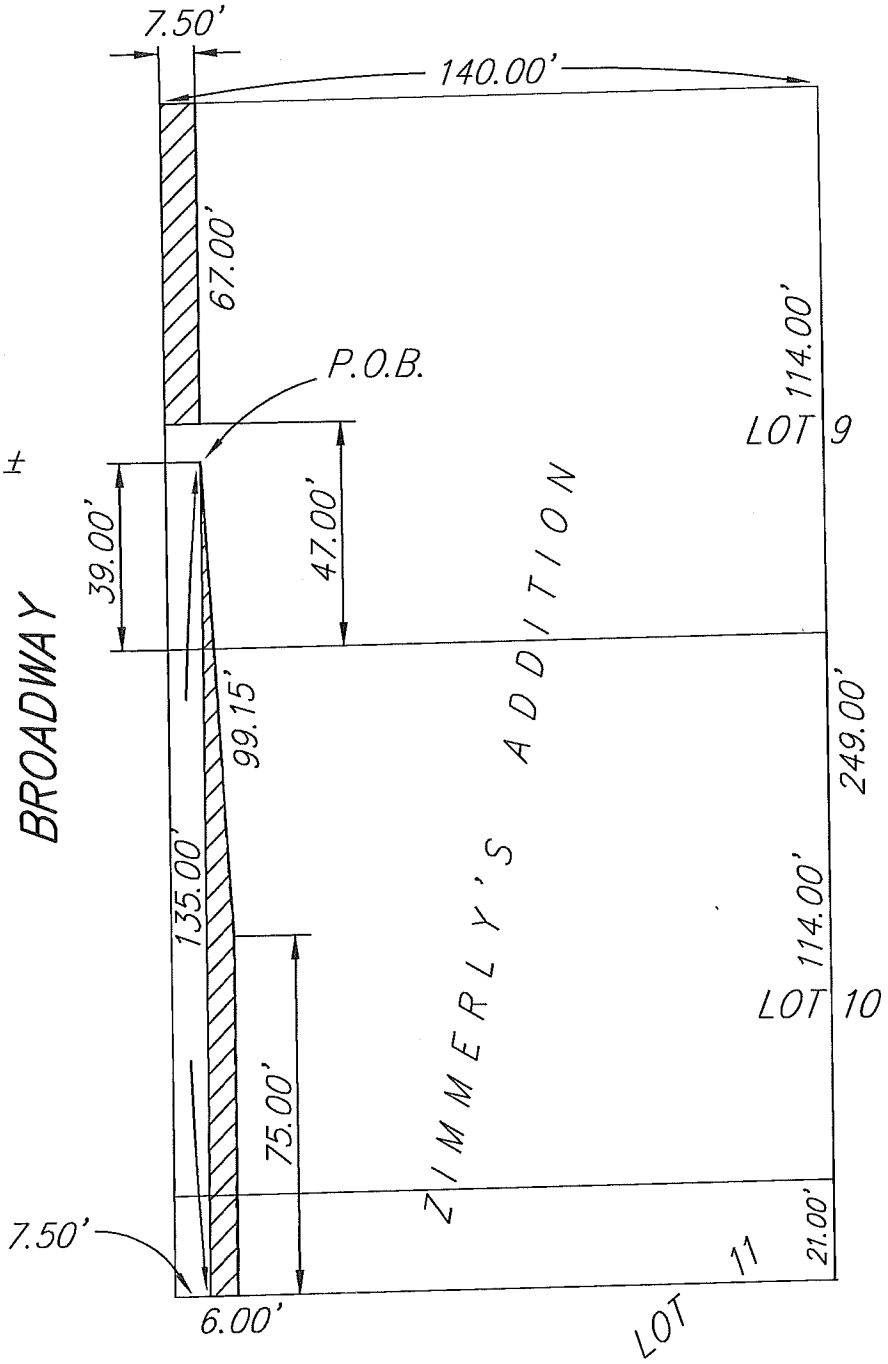

Ruggles & Bohm, P.A.
Engineering, Surveying, Land Planning
924 North Main
Wichita, Kansas 67203
www.rbkansas.com
(316) 264-8008
(316) 264-4621 fax
E-mail: info@rbkansas.com

3576T

B 05182, B 05183 & B 05188 – Temporary Construction Easement

That part of Lots 9, 10 and 11, Zimmerly's Addition to the City of Wichita, Sedgwick County, Kansas, described as beginning at a point 39.00 feet north and 7.50 feet east of the southwest corner of said Lot 9; thence South, parallel with the west line of Lots 9, 10 and 11, 174.00 feet; thence East, 6.00 feet; thence North, parallel with said west line, 75.00 feet; thence northwesterly, 99.15 feet to the place of beginning; TOGETHER WITH the west 7.50 feet of Lot 9, EXCEPT the south 47.00 feet thereof.

WILLIAM K. CLEVENGER
LICENSED
LS-1437
9/28/10
KANSAS
LAND SURVEYOR

1552 South Broadway

Every reasonable effort has been made to assure the accuracy of the maps and associated data provided herein. This information is provided with the understanding that the data are susceptible to a degree of error, and conclusions drawn from such information are the responsibility of the reader. The City of Wichita makes no warranty, representation or guaranty as to the content, accuracy, timeliness or completeness of any of the data provided herein. Some data provided here and used for the preparation of these maps has been obtained from public records not created or maintained by the City of Wichita. The City of Wichita shall assume no liability for any decisions made or actions taken or not taken by the reader in reliance upon any information or data furnished hereunder. The user should consult with the appropriate departmental staff member, e.g. Planning, Parks & Recreation, etc. to confirm the accuracy of information appearing in the visual presentations accessible through these web pages.

CITY OF WICHITA
City Council Meeting
September 13, 2011

TO: Mayor and City Council Members

SUBJECT: Partial Acquisition at 510 East 49th Street North for the Wichita-Valley Center Flood Control Levee Certification and Rehabilitation Project (County)

INITIATED BY: Office of Property Management

AGENDA: Consent

Recommendation: Approve the acquisition.

Background: In 2007, the City of Wichita and Sedgwick County entered into an agreement with Federal Emergency Management Agency (FEMA) whereby it was agreed that the City and County would provide certification that the Wichita-Valley Center Flood Control levee system meet revised FEMA levee standards. As part of this certification process, certain portions of the levee system were identified as needing rehabilitation. The property at 510 East 49th Street North, Park City is impacted by the Levee Project. At the rear of the property, adjacent to the existing levee right-of-way, a twelve foot wide strip of land is required. The area is comprised of 1,046 square feet. The residential improvements are removed from the project, however; landscaping, trees and fencing will be impacted.

Analysis: The owner rejected the appraised value of $630. The appraised amount did not include compensation for loss of mature trees and the relocation of the fence. The owner did agree to $6,277, or $630 for the taking, and $5,647 for the trees and fence. The amount for the trees and fence are based on estimates to replace and relocate the existing improvements. The estimates are reasonable.

Financial Considerations: The funding source for the project is General Obligation Bonds. A budget of $7,277 is requested. This includes $6,277 for the acquisition and $1,000 for closing costs and title insurance.

Goal Impact: The acquisition of this parcel is necessary to ensure Efficient Infrastructure by improving storm water issues in a major residential area.

Legal Considerations: The Law Department has approved the real estate agreement as to form.

Recommendations/Actions: It is recommended that the City Council; 1) approve the budget; 2) approve the real estate agreement; and 3) authorize the necessary signatures.

Attachments: Real estate agreement, tract map, and aerial map.

PROJECT: North Levee **DATE:** May 3, 2011

COUNTY: Sedgwick **TRACT NO.:** 32

THE CITY OF WICHITA, KANSAS

CONTRACT FOR CONVEYANCE OF REAL ESTATE BY FLOOD PROTECTION LEVEE EASEMENT

THIS AGREEMENT Made and entered into this 18 day of August, 2011, by and between

Sharon Poleski and Gary L. Poleski, Married Couple

510 E 49th Street N, Park City, KS 67219
(Name and Address)

landowner(s), and the City of Wichita of the State of Kansas.

WITNESSETH, For consideration as hereinafter set forth, the landowner(s) hereby agree(s) to convey fee title to the City of Wichita by Warranty Deed to the following described real estate in the County of Sedgwick, State of Kansas, to wit:

SEE EXHIBIT "A" ATTACHED HERETO AND MADE A PART HEREOF

It is understood and agreed that landowner(s) is/are responsible for all property taxes on the above described property accrued prior to the conveyance of title to the City of Wichita. In the event of relocation, landowner(s) hereby expressly agrees and covenants that they will hold and save harmless and indemnify the City of Wichita and his or her authorized representatives from any and all costs, liabilities, expenses, suits, judgments, damages to persons or property or claims of any nature whatsoever which may occur during the time the City becomes legally entitled to the property and the date of relocation. In no event will the landowner(s) be required to move until the City becomes legally entitled to the property.

The City of Wichita agrees to purchase the above described real estate, and to pay therefore, the following amount within sixty days after the warranty deed conveying said property free of encumbrance has been delivered.

Real property to be acquired as right of way:
1,047 (Sq. Ft.) $ 630.00
Temporary Easement for construction:
(Sq. Ft.) $ N/A

Improvement & Buildings acquired with right of way:
Landscaping/Trees and Fencing $ 5,647.00

TOTAL: $ 6,277.00

It is understood and agreed that the above stated consideration for said real estate is in full payment of said tract of land and all damages arising from the transfer of said property and its use for the purposes above set out.

IN WITNESS WHEREOF The parties have hereunto signed this agreement the day and year first above written.

LANDOWNERS:

By: Sharon Poleski
Sharon Poleski

By: Gary Poleski
Gary L.Poleski

THE CITY OF WICHITA

By:
Carl Brewer, Mayor

ATTEST:

By:
Karen Sublett, City Clerk

MEMORANDA

Exact and full name of owner, as name appears of record:

Sharon Poleski

If mortgage or other liens, show names of holders:
Mortgage Dated March 31, 1997 Filed April 8, 1997 Film 1685 Page 1775

REMARKS:

PIN/APN 00496115

Security Title File Number 2021838

APPROVED TO FORM:

Gary E. Rebenstorf, Director of Law

RECOMMENDED BY:

Joseph J. Vorstenbosch, Project Manager

Sharon Poleski Tract "32" (Key # KE-PC-02542):

Lot 43, in Broadway Heights, an Addition to Wichita, Sedgwick County, Kansas, EXCEPT that portion condemned for flood control purposes in District Court Case A-41501.

ADDITIONAL TAKING DESCRIPTION:
A portion of Lot 43, in Broadway Heights, an Addition to Wichita, Kansas, Sedgwick County, Kansas, described more particularly as commencing at the southeast corner of said Lot 43; thence N00°56'01"W (assumed), along the east line of said Lot 43, 333.00 feet to the point of beginning; thence S58°50'57"W, 115.72 feet to a point on the west line of said Lot 43, and 274.00 feet north of the southwest corner of said Lot 43; thence N00°56'01"W, along the west line of said Lot 43, 11.83 feet to a point on the south line of the Chisholm Creek Diversion Condemnation Case A-41501; thence northeasterly along the south line of said Chisholm Creek Diversion, said line being a 7°42.7' curve to the left having a calculated radius of 742.98 feet, an arc length of 116.25 feet, a chord length of 116.13 feet and a chord bearing of N58°30'33"E, to a point on the east line of said Lot 43; thence S00°56'01"E, along the east line of said Lot 43, 12.62 feet to the point of beginning.

Additional taking contains 1,046.5 square feet, or 0.024 acres.

NOTE: Baughman Company, P.A. has not researched any title examination of subject property. An abstract or title insurance company would need to be contacted to research and provide to us any easements, rights-of-ways or dedications.

0 60 120

(C) = Calculated
CH. = Chord Length
CH. BR. = Chord Bearing
Δ = Delta Angle
(D) = Described
L = Arc Length
(M) = Measured
(P) = Platted
(Pro) = Prorated
R = Radius

PRESTON A. STEWART
LICENSED
LS-1386
11-9-10
KANSAS
LAND SURVEYOR

NOTE: All Coordinates listed are in State Plane coordinates Kansas Grid South.

NOTE: Dimensions listed are on the ground.

Pt. #	State Plane Northing	State Plane Easting
2103	1,717,703.97	1,651,402.38
2104	1,717,680.84	1,648,807.82
2119	1,718,003.26	1,649,567.56
2121	1,718,053.99	1,649,666.57
4005	1,718,051.28	1,649,666.78
4006	1,717,991.43	1,649,567.75

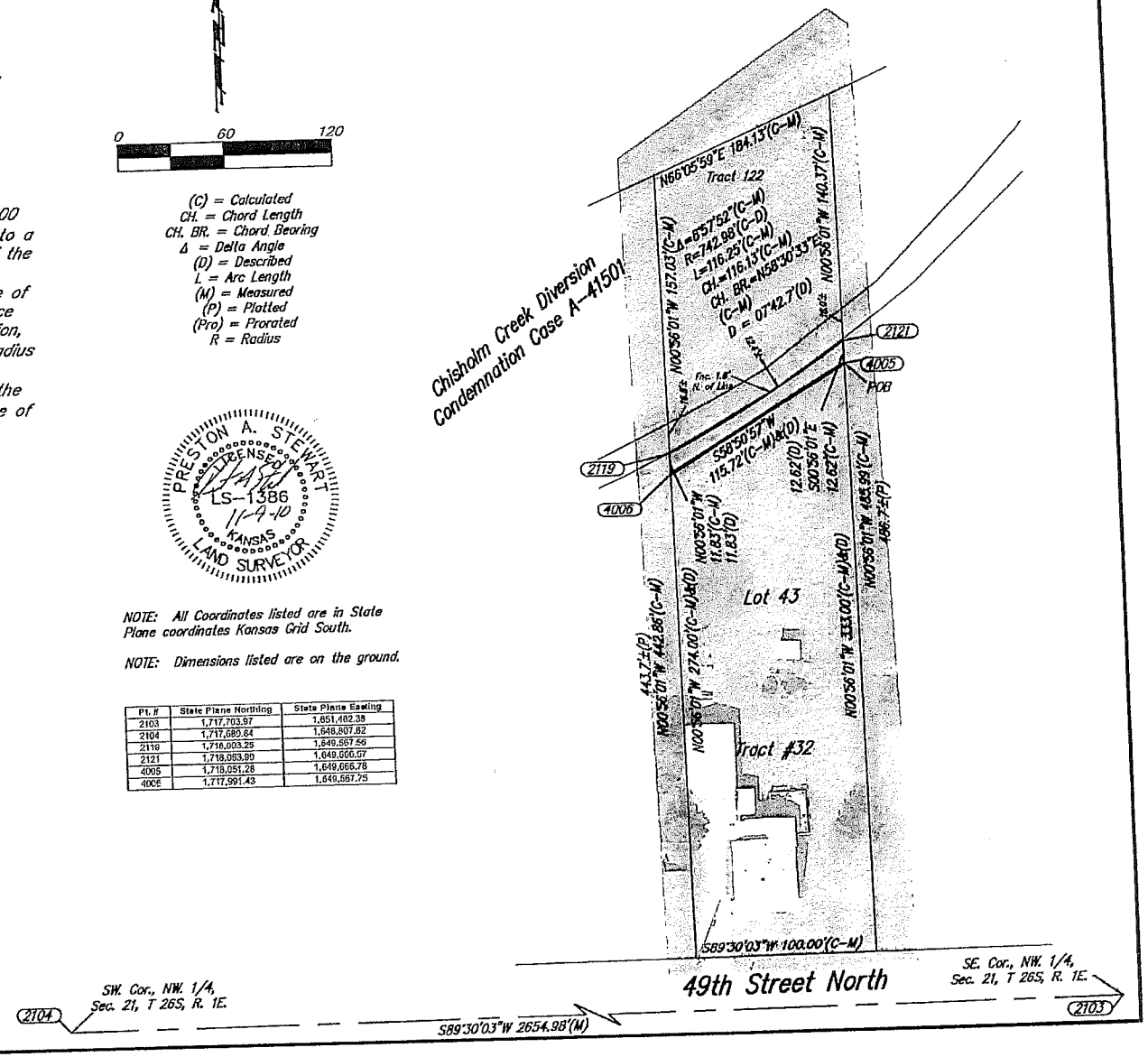

Tract #32 - Exhibit
Lot 43, Broadway Heights
Sedgwick County, Kansas

Baughman

Baughman Company, P.A. 315 Ellis St. Wichita, KS 67211 P 316-262-7271 F 316-262-0149
ENGINEERING | SURVEYING | PLANNING | LANDSCAPE ARCHITECTURE

REVISIONS	APPROVED MGC	DRAWN PAS
	SCALE 1"=60'	DATE November 9, 2010

E:\Projects\WVCFLS_10-07-P687\Tract_32.dwg 10-07-P687

510 East 49th Street North

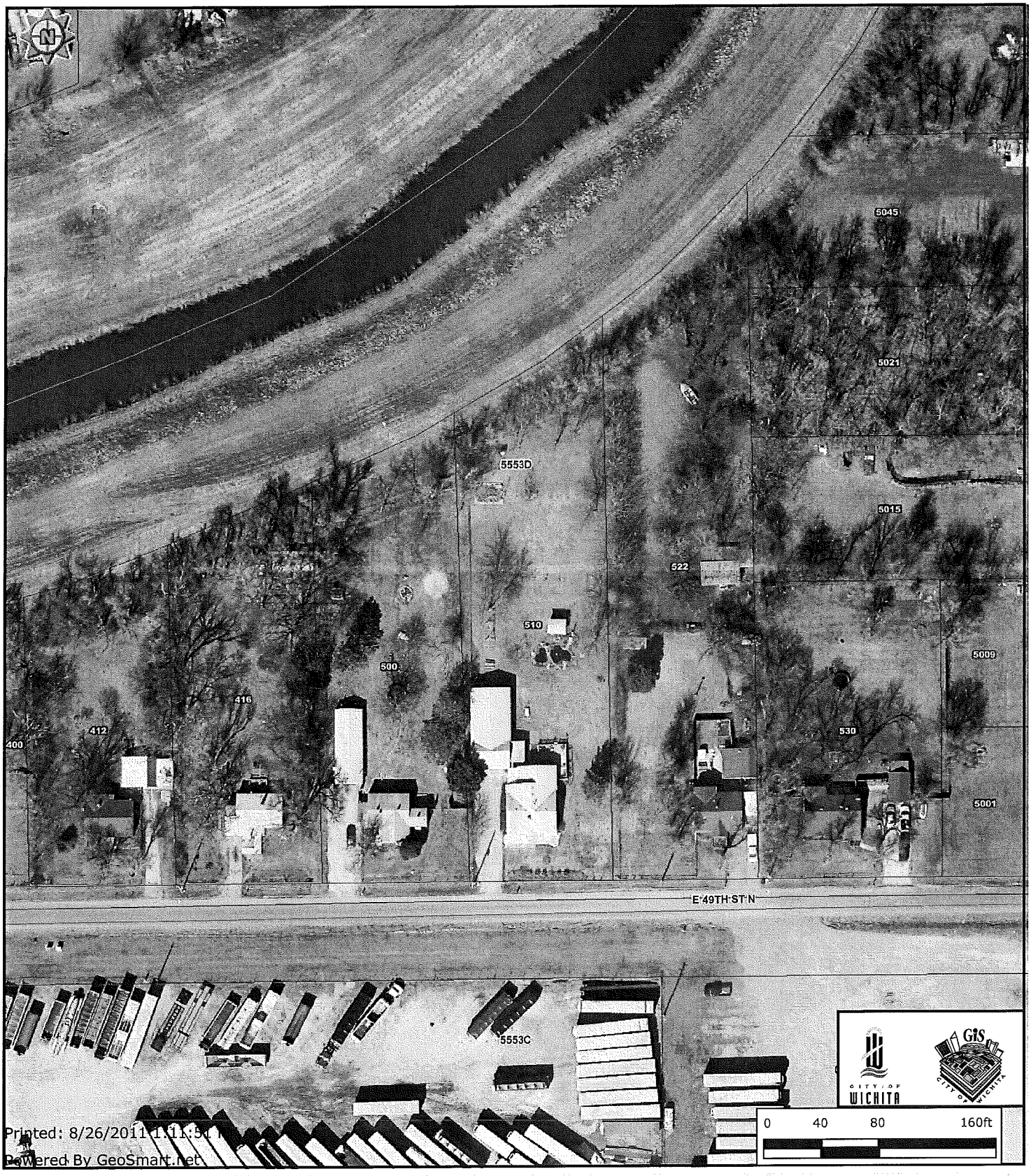

Every reasonable effort has been made to assure the accuracy of the maps and associated data provided herein. This information is provided with the understanding that the data are susceptible to a degree of error, and conclusions drawn from such information are the responsibility of the reader. The City of Wichita makes no warranty, representation or guaranty as to the content, accuracy, timeliness or completeness of any of the data provided herein. Some data provided here and used for the preparation of these maps has been obtained from public records not created or maintained by the City of Wichita. The City of Wichita shall assume no liability for any decisions made or actions taken or not taken by the reader in reliance upon any information or data furnished hereunder. The user should consult with the appropriate departmental staff member, e.g. Planning, Parks & Recreation, etc. to confirm the accuracy of information appearing in the visual presentations accessible through these web pages.

CITY OF WICHITA
City Council Meeting
September 13, 2011

TO: Mayor and City Council Members

SUBJECT: Partial Acquisition at 5140 North Valentine for the Wichita-Valley Center Flood Control Levee Certification and Rehabilitation Project (County)

INITIATED BY: Office of Property Management

AGENDA: Consent

Recommendation: Approve the acquisition.

Background: In 2007, the City of Wichita and Sedgwick County entered into an agreement with Federal Emergency Management Agency (FEMA) whereby it was agreed that the City and County would provide certification that the Wichita-Valley Center Flood Control levee system meet revised FEMA levee standards. As part of this certification process, certain portions of the levee system were identified as needing rehabilitation. One such segment is located at 5140 North Valentine in Park City. The property is zoned for and improved with a single-family residence. The rear of the property is where the project impacts the site. The improvements are removed from the project and will not be impacted.

Analysis: The project acquisition area is an irregular shaped parcel containing 515 square feet. The owner agreed to accept the estimated market value of $310, or $0.60 per square foot for the land. There is no damage to the remainder of the property.

Financial Considerations: The funding source for the project is General Obligation Bonds. A budget of $1,310 is requested. This includes $310 for the acquisition and $1,000 for closing costs and title insurance.

Goal Impact: The acquisition of this parcel is necessary to ensure Efficient Infrastructure by improving storm water issues in a major residential area.

Legal Considerations: The Law Department has approved the real estate agreement as to form.

Recommendations/Actions: It is recommended that the City Council; 1) approve the budget; 2) accept the easement and 3) authorize the necessary signatures.

Attachments: Permanent easement, real estate agreement, tract map, and aerial map.

PROJECT: North Levee

DATE: August 9, 2011

COUNTY: Sedgwick

TRACT NO.: 19

CITY OF WICHITA, KANSAS
A MUNICIPAL CORPORATION

CONTRACT FOR CONVEYANCE OF REAL ESTATE BY WARRANTY DEED

THIS AGREEMENT made and entered into this 9th day of August, 2011 by and between:

Jill A. Crown, landowners,
and the City of Wichita, State of Kansas,

WITNESSETH, For consideration as hereinafter set forth, the landowner(s) hereby agree(s) to convey unto the City, their duly authorized agents, contractors and assigns the right to enter upon the following described land in Sedgwick County to wit:

A Right-of-way Acquisition Described as Follows:

A portion of Lot 65, Broadway Heights, an Addition to Wichita, Kansas, Sedgwick County, Kansas, more particularly described as beginning at the southeast corner of said Lot 65; thence S89°03'28"W (assumed), along the south line of said Lot 65, 10.30 feet more or less to a point 372.08 feet east of the southwest corner of said Lot 65; thence N08°17'15"W, 100.83 feet to the northeast corner of said Lot 65; thence S13°19'56"E along the east line of said Lot 65, 103.07 feet to the point of beginning.

Additional taking contains 515.0 square feet, or 0.012 acres.

It is understood and agreed that landowner(s) is/are responsible for all property taxes on the above described property accrued prior to the conveyance of title to the City. In the event of relocation, landowner(s) hereby expressly agrees and covenants that they will hold and save harmless and indemnify the City and its authorized representatives from any and all costs, liabilities, expenses, suits, judgements, damages to persons or property or claims of any nature whatsoever which may occur during the time the City becomes legally entitled to the property until the relocation is completed. In no event will the land owner(s) be required to move until the City becomes legally entitled to the property.

The City agrees to purchase the above described real estate, and to pay therefore, the following amount within 45 days after the warranty deed conveying said property free of encumbrance has been delivered.

Approximately 515 sq. ft. for right-of-way $310.00
sq. ft. for Temporary Easement
Cost to Cure:
Damages including but not limited to: _____

TOTAL $310.00

It is understood and agreed that the above stated consideration for said real estate is in full payment of said tract of land and all damages arising from the transfer of said property and its use for the purposes above set out.

IN WITNESS WHEREOF The parties have hereunto signed this agreement the day and year first above written.

LANDOWNERS:

X Jill A. Crown
Jill A. Crown

City of Wichita
County of Sedgwick
State of Kansas

BUYER:
City of Wichita, KS, a municipal corporation

_____
Carl Brewer, Mayor

ATTEST:

_____
Karen Sublett, City Clerk

Approved as to form:

_____
Gary E. Rebenstorf, Director of Law

MEMORANDA

Rev. 9-94
Form No. 1716

D. O. T.

Exact and full name of owner, as it appears of record:

Jill A. Crown, a single person

If mortgage or other liens, show names of holders:

Top Mortgage Corporation

REMARKS:

RECOMMENDED BY: Dennis Keegan

Dennis Keegan, Acquisition Agent

Rev. 9-94
Form No. 1716

D. O. T.

FLOOD PROTECTION LEVEE EASEMENT

"EASEMENT FOR PONDING AND OVERLAND FLOWAGE"
KNOW ALL PERSON BY THESE PRESENTS:

That Jill A. Crown, a single person (hereinafter called "Grantor") in consideration of the sum of Ten Dollars and no/100 ($10.00) and other good and valuable considerations, to be paid by the City of Wichita, Kansas, a municipal corporation the receipt of which is hereby acknowledged by the Grantor, does hereby sell, grant, and convey unto the **CITY OF WICHITA, KANSAS, a municipal corporation, (hereinafter called "City")**, a permanent easement to construct, maintain, repair, operate, patrol and replace a flood protection levee, including all appurtenances thereto; reserving, however, to the owners, their heirs and assigns, all such rights and privileges in the land as may be used without interfering with or abridging the rights and easement hereby acquired; subject, however, to existing easements for public roads and highways, public utilities, railroads and pipelines, over, on, under and upon and across the following described real estate:

A permanent easement for floodway right of way over a tract of land for Floodway right of way described as follows:

A portion of Lot 65, Broadway Heights, an Addition to Wichita, Kansas, Sedgwick County, Kansas, more particularly described as beginning at the southeast corner of said Lot 65; thence S89°03'28"W (assumed), along the south line of said Lot 65, 10.30 feet more or less to a point 372.08 feet east of the southwest corner of said Lot 65; thence N08°17'15"W, 100.83 feet to the northeast corner of said Lot 65; thence S13°19'56"E along the east line of said Lot 65, 103.07 feet to the point of beginning.

Additional taking contains 515.0 square feet, or 0.012 acres.

This Easement shall be subject to the following terms and conditions:

1. **ERECTION OF STRUCTURES PROHIBITED.** Grantor and its successors and assigns shall not erect any structure, building, or fence over or within the Easement Areas.

2. **CHANGE IN GRADE PROHIBITED.** Grantor and its successors and assigns shall not change the grade, elevation or contour of any part of the Easement Area.

3. **EASEMENT RUNS WITH LAND.** This Easement shall be perpetual, permanent and runs with the land and shall be binding on Grantor and on Grantor's successors and assigns.

Grantor does **HEREBY COVENANT** with the City that Grantor holds said real estate described in this Easement by title in fee simple; that Grantor has good and lawful authority to convey the same; and said Grantor covenants to **WARRANT AND DEFEND** the said premises against the lawful claims of all persons whomsoever.

Each of the undersigned hereby relinquishes all rights of dower, homestead and distributive share, if any, in and to the interests conveyed by this Easement.

Dated this 10TH day of AUGUST, 2011

Jill A. Crown

Jill A. Crown

STATE OF KANSAS)
) ss
COUNTY OF SEDGWICK)

I, Dennis Keegan, a Notary Public in and for said County and State, DO HEREBY CERTIFY that **Jill A. Crown, a single person** who is personally known to me to be the same person(s) whose name(s) is/are subscribed to the foregoing instrument, appeared before me this day in person and acknowledged that he/she/they signed, sealed and delivered the said instrument as his/hers/their free and voluntary act, for uses and purposes therein set forth.

Given under my hand and Notarial Seal this 10TH day of AUGUST, A.D. 2010

(SEAL)

DENNIS M. KEEGAN
Notary Public - State of Kansas
My Appt. Expires Oct 31 2012

Dennis M. Keegan, NOTARY PUBLIC

Crown Tract "19"(Key # KE-PC-02561):

Lot 65, Broadway Heights, an Addition to Wichita, Kansas, Sedgwick County, Kansas.

ADDITIONAL TAKING DESCRIPTION:
A portion of Lot 65, Broadway Heights, an Addition to Wichita, Kansas, Sedgwick County, Kansas, more particularly described as beginning at the southeast corner of said Lot 65; thence S89°03'28"W (assumed), along the south line of said Lot 65, 10.30 feet more or less to a point 372.08 feet east of the southwest corner of said Lot 65; thence N08°17'15"W, 100.83 feet to the northeast corner of said Lot 65; thence S13°19'56"E along the east line of said Lot 65, 103.07 feet to the point of beginning.

Additional taking contains 515.0 square feet, or 0.012 acres.

NOTE:
1. Easement to the City of Wichita, filed in Misc. Book 378, Page 235 (illegible).

PRESTON A. STEWART
LICENSED
LS-1386
11-4-10
KANSAS
LAND SURVEYOR

0 60 120

(C) = Calculated
CH. = Chord Length
CH. BR. = Chord Bearing
Δ = Delta Angle
(D) = Described
L = Arc Length
(M) = Measured
(P) = Platted
(Pro) = Prorated
R = Radius

NOTE: All Coordinates listed are in State Plane coordinates Kansas Grid South.

NOTE: Dimensions listed are on the ground.

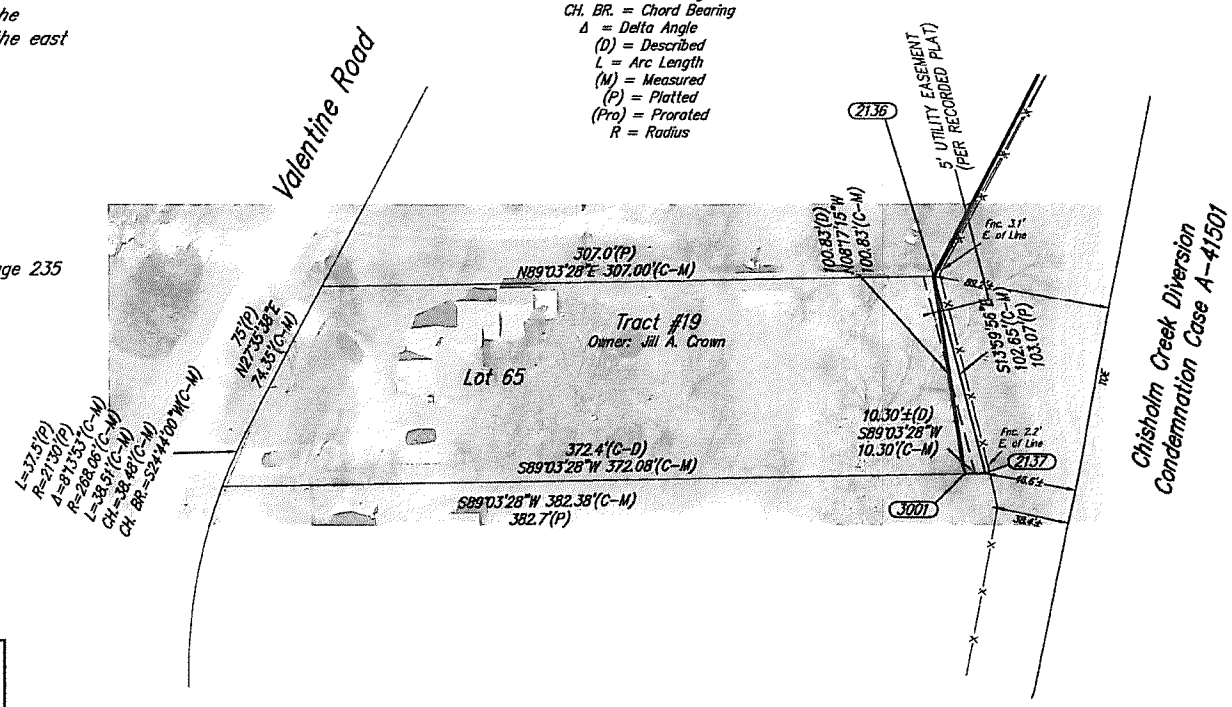

Pt. #	State Plane Northing	State Plane Easting
2136	1,719,020.48	1,649,659.80
2137	1,718,920.88	1,649,684.63
3001	1,718,920.72	1,649,674.34

Baughman

Tract #19 - Exhibit
KE-PC-02561 - Lot 65, Broadway Heights
Sedgwick County, Kansas

Baughman Company, P.A. 315 Ellis St. Wichita, KS 67211 P 316-262-7271 F 316-262-0149
ENGINEERING | SURVEYING | PLANNING | LANDSCAPE ARCHITECTURE

REVISIONS	APPROVED PAS	DRAWN PAS
	SCALE 1"=60'	DATE November 4, 2010

E:|Projects|WVCFLS_10-07-P687|Tract_16.dwg 10-07-P687

5140 N Valentine Park City

Every reasonable effort has been made to assure the accuracy of the maps and associated data provided herein. This information is provided with the understanding that the data are susceptible to a degree of error, and conclusions drawn from such information are the responsibility of the reader. The City of Wichita makes no warranty, representation or guaranty as to the content, accuracy, timeliness or completeness of any of the data provided herein. Some data provided here and used for the preparation of these maps has been obtained from public records not created or maintained by the City of Wichita. The City of Wichita shall assume no liability for any decisions made or actions taken or not taken by the reader in reliance upon any information or data furnished hereunder. The user should consult with the appropriate departmental staff member, e.g. Planning, Parks & Recreation, etc. to confirm the accuracy of information appearing in the visual presentations accessible through these web pages.

Agenda Item No. II-10d

CITY OF WICHITA
City Council Meeting
September 13, 2011

TO: Mayor and City Council

SUBJECT: Partial Acquisition of 1404 North Fairmount Street North for the East 13th Street, Hydraulic to Oliver Road Improvement Project (District I)

INITIATED BY: Office of Property Management

AGENDA: Consent

Recommendation: Approve the acquisition.

Background: On November 6, 2007, the City Council approved the design concept and proposed project to widen East 13th Street North between Hydraulic to Oliver. The project will require the acquisition of all or part of 79 tracts. The improvements include adding a center turn lane, relocating the sidewalks away from the back of the curb, improving the storm sewer system and landscaping. The project requires right-of-way from the residential property located at 1404 North Fairmount. The right-of-way required consists of 1,807 square feet. An additional 1,152 square feet is impacted by a temporary construction easement. There are several mature trees in the temporary easement area that will need to be removed as part of the project. In addition, there is a wooden privacy fence in the acquisition area.

Analysis: The owner rejected the estimated appraised offer of $12,610. After negotiation, the owner agreed to a purchase price of $15,935. The wooden privacy fence will need to be moved out of the easement area and reset at the new property line at project completion. The offer amount included only the value of the fence and did not include the cost to move the fence out of the project area and back. The settlement amount includes this extra cost.

Financial Considerations: The funding source for the project is General Obligation Bonds. A budget of $16,435 is requested. This includes $15,935 for the acquisition, $500 for title work and other administrative fees.

Goal Impact: The acquisition of this parcel is necessary to ensure Efficient Infrastructure by improving the traffic flow through a major transportation corridor.

Legal Considerations: The Law Department has approved the real estate purchase agreement as to form.

Recommendation/Action: It is recommended that the City Council 1) approve the agreement; 2) approve the budget and; 3) authorize the necessary signatures.

Attachments: Real estate purchase agreement, tract map and aerial map.

PROJECT: 13th Street North **DATE:** August 12, 2011

COUNTY: Sedgwick **TRACT NO.:** 148

THE CITY OF WICHITA, KANSAS

CONTRACT FOR CONVEYANCE OF REAL ESTATE BY WARRANTY DEED

THIS AGREEMENT Made and entered into this _____ day of _____, 2011 by and between

Reggie Harlmon

1404 North Fairmount Wichita KS 67214
(Name and Address)

landowner(s), and the City of Wichita of the State of Kansas.

WITNESSETH, For consideration as hereinafter set forth, the landowner(s) hereby agree(s) to convey fee title to the City of Wichita by Warranty Deed to the following described real estate in the County of Sedgwick, State of Kansas, to wit:

A tract of land in Lots 188 and 190, on Fairmount Avenue, Fairmount Addition, an addition to Wichita, Sedgwick County, Kansas more particularly described as follows:

The South 2.32 feet of Lot 190 on Fairmount Avenue, in Fairmount Addition to Wichita, Sedgwick County, Kansas

Together with a temporary construction easement for three (3) years on the following described property:

A tract of land in Lots 188 and 190, on Fairmount Avenue, Fairmount Addition, an addition to Wichita, Sedgwick County, Kansas more particularly described as follows:

The North 7.68 feet of the South 10 feet of Lot 190 on Fairmount Avenue, in Fairmount Addition to Wichita, Sedgwick County, Kansas

It is understood and agreed that landowner(s) is/are responsible for all property taxes on the above described property accrued prior to the conveyance of title to the City of Wichita. In the event of relocation, landowner(s) hereby expressly agrees and covenants that they will hold and save harmless and indemnify the City of Wichita and his or her authorized representatives from any and all costs, liabilities, expenses, suits, judgments, damages to persons or property or claims of any nature whatsoever which may occur during the time the City becomes legally entitled to the property and the date of relocation. In no event will the landowner(s) be required to move until the City becomes legally entitled to the property.

The City of Wichita agrees to purchase the above described real estate, and to pay therefore, the following amount within sixty days after the warranty deed conveying said property free of encumbrance has been delivered.

Approximately 348 Sq. Ft. for Right of Way Damages including but not limited to all improvements and real property of the landowner: $ 15,780.00

Approximately 1,152 Sq. Ft. for Temporary Easement $ 155.00

TOTAL: $ 15,935.00

The price above is inclusive of all relocation benefits for which the Landowner is eligible under applicable laws and statutes.

The City agrees to give Landowner sufficient notice prior to construction to allow Landowner time to construct fencing along the north line of the temporary easement. The City will be responsible for removing any existing fencing in the right of way parcel and temporary easement area. Upon completion of construction, Landowner will be responsible for constructing permanent fencing along the new property line if Landowner desires such a fence.

It is understood and agreed that the above stated consideration for said real estate is in full payment of said tract of land and all damages arising from the transfer of said property and its use for the purposes above set out.

IN WITNESS WHEREOF The parties have hereunto signed this agreement the day and year first above written.

LANDOWNER: Reggie Harlmon

By: _____ By: _____

THE CITY OF WICHITA ATTEST:

By: _____ By: _____

Carl Brewer, Mayor Karen Sublett, City Clerk

MEMORANDA

Exact and full name of owner, as name appears of record:

Reggie Harlmon

If mortgage or other liens, show names of holders:

Associates Home Equity Services, Inc.

APPROVED TO FORM: APPROVED AS TO FORM:

_____ _____

Gary E. Rebenstorf, Director of Law

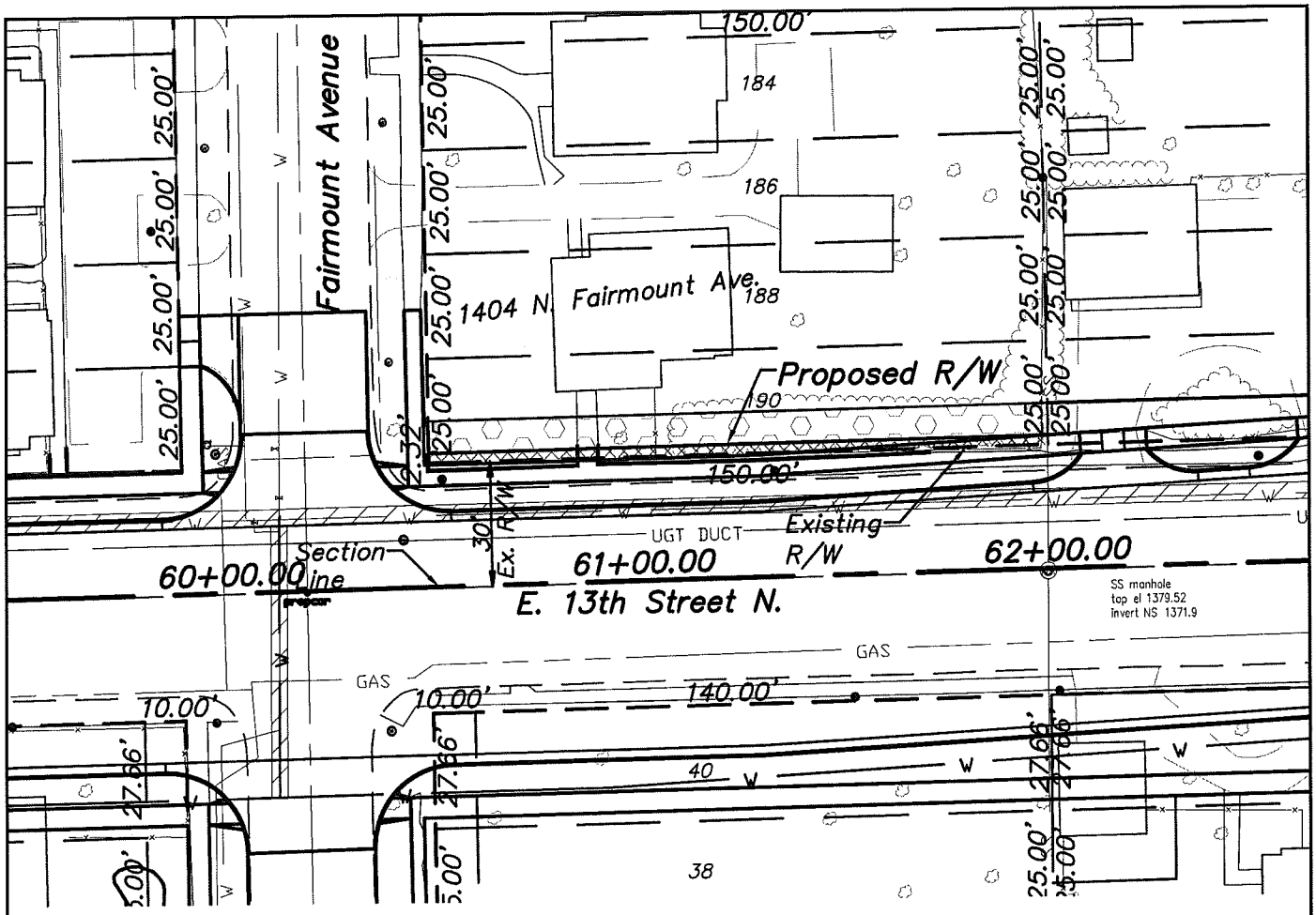

PROPOSED R/W ACQ. LEGAL:

A tract of land in Lots 188 & 190, on Fairmount Avenue, Fairmount Addition, an addition to Wichita, Sedgwick County, Kansas, more particularly described as follows:

All of the south 2.32 feet of said Lot 190 on Fairmount Avenue, as platted in Fairmount Addition.

TAX KEY #: C04650

R/W ACQUISITION SIZE: 348 sq. ft.

PROPOSED R/W ACQUISITION

13th STREET
HYDRAULIC AVENUE TO OLIVER

TRACT MAP

REGGIE HARLMON
SEC 11-T27-R1E

Oct. 15th, 2010

SCALE: 1" = 40'

Tract No. 148

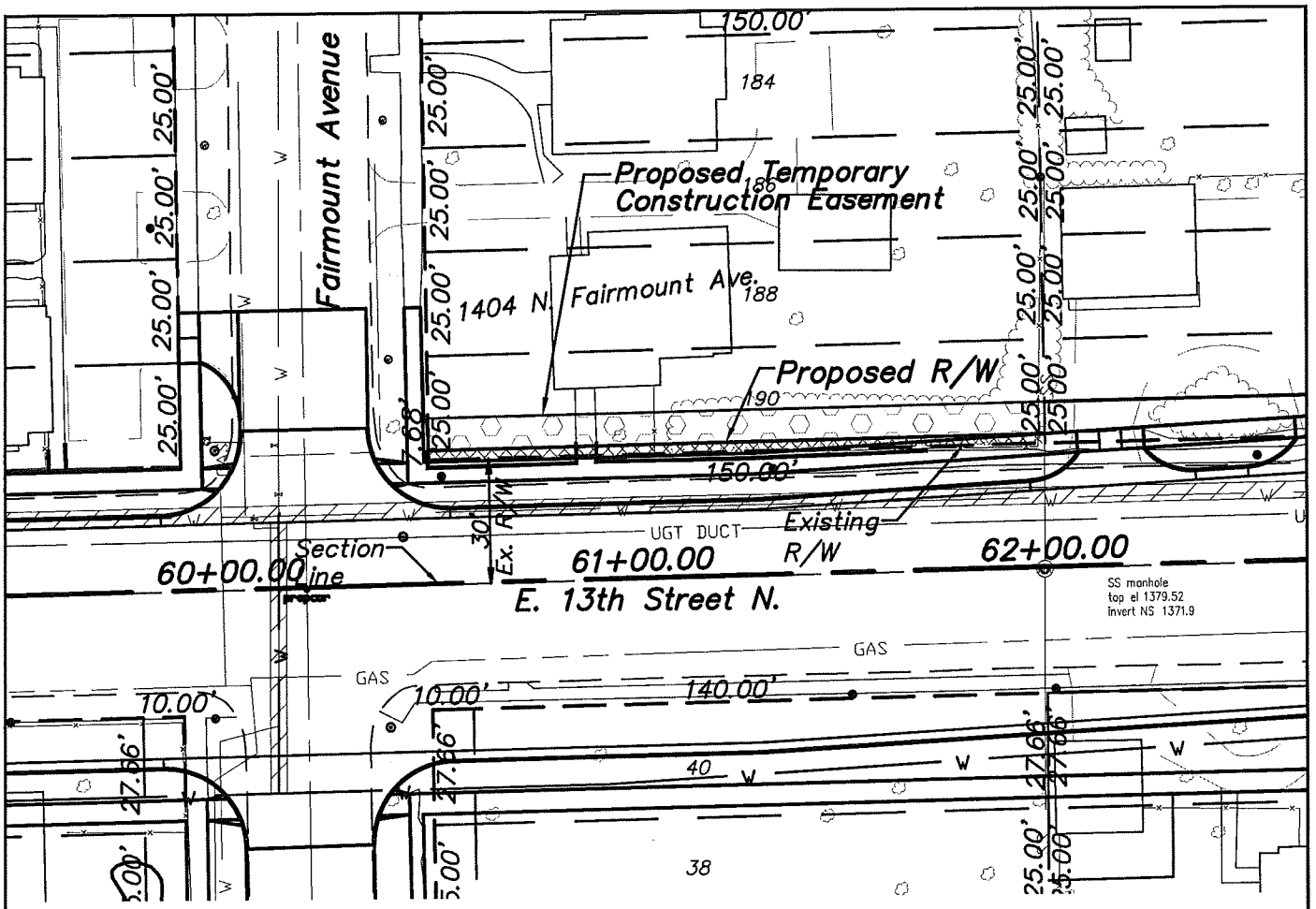

PROPOSED TEMPORARY CONSTRUCTION EASEMENT ACQ. LEGAL:

A tract of land in Lots 188 & 190, on Fairmount Avenue, Fairmount Addition, an addition to Wichita, Sedgwick County, Kansas, more particularly described as follows:

All of the north 7.68 feet of the south 10.00 feet of said Lot 190 on Fairmount Avenue, as platted in Fairmount Addition.

TAX KEY #: C04650

TEMPORARY CONSTRUCTION EASEMENT ACQUISITION SIZE: 1,152 sq. ft.

PROPOSED TEMPORARY CONSTRUCTION EASEMENT ACQUISITION

13th STREET
HYDRAULIC AVENUE TO OLIVER

TRACT MAP

REGGIE HARLMON
SEC 11-T27-R1E

Oct. 10, 2010

SCALE: 1" = 40'

Tract No. 148

1404 North Fairmount

Property Parcels

Roads
- State Highway
- US Federal Highway
- Interstate
- KTA
- Arterial
- Collector
- Minor
- Ramp

Railroads

Quarter Section

Waterways

Streams

Parks

Airports

SDERASTER.SDEDATA.ORTHO1FT

SDERASTER.SDEDATA.ORTHO

City Limits
- Andale
- Bel Aire
- Bentley
- Cheney
- Clearwater
- Colwich
- Derby
- Eastborough
- Garden Plain
- Goddard
- Haysville
- Kechi
- Maize
- Mount Hope
- Mulvane
- Park City

Every reasonable effort has been made to assure the accuracy of the maps and associated data provided herein. This information is provided with the understanding that the data are susceptible to a degree of error, and conclusions drawn from such information are the responsibility of the reader. The City of Wichita makes no warranty, representation or guaranty as to the content, accuracy, timeliness or completeness of any of the data provided herein. Some data provided here and used for the preparation of these maps has been obtained from public records not created or maintained by the City of Wichita. The City of Wichita shall assume no liability for any decisions made or actions taken or not taken by the reader in reliance upon any information or data furnished hereunder. The user should consult with the appropriate departmental staff member, e.g. Planning, Parks & Recreation, etc. to confirm the accuracy of information appearing in the visual presentations accessible through these web pages.

Proposed Assessment Rolls.

Proposed Assessment Rolls have been prepared for, fourteen (14) paving projects and it is necessary to set a public hearing date. Informal hearing with City personnel will be held October 3, 2011 at 11:00 a.m. Notification of both the informal and formal public hearings regarding the proposed special assessments will be mailed to affected property owners on September 23, 2011.

RECOMMENDED ACTION: Set the hearing on the Proposed Assessment Rolls for 9:30 a.m., Tuesday, October 18, 2011, and publish the notices of hearing at least once not less than 10 days prior to the date of the hearing.

DEPARTMENT OF LAW
INTEROFFICE MEMORANDUM

TO: Karen Sublett, City Clerk

FROM: Gary E. Rebenstorf, Director of Law

SUBJECT: Report on Claims for July 2011

DATE: August 26, 2011

The following claims were approved by the Law Department during the month of July 2011.

AT&T	$2,002.73
AT&T	$2,583.47
Atterberry, William	$ 66.24
Arnold, William	$ 342.33
Black Hills Energy	$ 611.31
Herzog, Jeff	$ 7.50
Kansas Aviation Museum	$ 517.50
Kansas Gas Service	$2,090.33***
Marsh, Gail	$ 932.01****

*City Manager Approval
** Settled for lesser amount than claimed
***Settled for more than amount claimed
****Overspray paint claim

cc: Robert Layton, City Manager
Kelly Carpenter, Director of Finance

Senior Management Expenses
2ND QUARTER APRIL - JUNE 2011

Employee by Department	Purpose	Amount
01-City Manager Staff		
Robert Layton, City Manager	KS Association of City/County Management Conf, Lawrence, KS	$ 173.88
Cathy Holdeman, Assistant City Manager	KS Association of City/County Management Conf, Lawrence, KS	738.70
04-Law		
Gary Rebenstorf, Director of Law	International Municipal Lawyers Association Annual Top 50, New York City, NY	1,295.11
08-Police		
Norman Williams, Chief	KS Joint Law Enforcement Conference, Topeka, KS	359.42
09-Housing & Community Services		
Mary K Vaughn, Director of Housing & Community Services	National Community Development Association Conf, Cincinnati, OH	1,511.88
Mary K Vaughn, Director of Housing & Community Services	Spotlight in Excellence Conference, Indepence, MO	703.11
Brad Snapp, Assistant Director of Housing & Community Services	KS Chapter National Association of Housing & Redevelopment Officials, Kansas City, MO	433.41
10-Library		
Cynthia Berner-Harris, Director of Libraries	KS Library Association Conference, Topeka, KS	582.61
13-Public Works		
Jim Armour, Assistant Director of Public Works	KS Transportation Engineering Conference, Manhattan, KS	326.80
15-Planning		
Nancy Harvieux, Transporation Manager	KS Department of Transportation Meeting on Communication Improvement, Topeka, KS	153.04
Dale Miller, Current Plans Manager	Codes for Place-Making Workshop & Codes for Sustaining Places Workshop, Chicago, IL	2,129.18
16-Transit		

Senior Management Expenses
2ND QUARTER APRIL - JUNE 2011

Employee by Department	Purpose	Amount
Michael Vinson, Director of Transit	KS Public Transit Association Board Meeting, Topeka, KS	132.40
19-Airport		
Victor White, Director of Airports	Am Association of Airport Executives Conference, Atlanta, GA	2,387.92
Brad Christopher, Assistant Director of Airports	KS Association of Airports Workshop, Dodge, City KS	228.94
John Oswald, Engineering & Planning Manager	Cancellation fees for cancelled trip to the KS Association of Airports Workshop, Dodge, City KS	114.94
24-Human Resources		
Sarah Gilbert, Director of Human Resources	Evaluationg and Fostering Trust in an Organization, Overland Park, KS	515.27
Total		**$ 11,786.61**

City of Wichita
City Council Meeting
September 13, 2011

TO: Mayor and City Council

SUBJECT: Design/Build ADA Compliant Synthetic Safety Surfaced Ball Diamond at Orchard Park (District V).

INITIATED BY: Department of Park and Recreation

AGENDA: Consent

Recommendation: Approve the contract.

Background: On April 6th, 2010, the City Council approved the funding for an ADA (Americans with Disabilities Act) Compliant Ball Diamond in Orchard Park. On December 8th, 2010, the City received five design/build proposals. The Staff Screening and Selection Committee (SSSC) met on January 5th, 2011 and short-listed the firm of Hellas Construction, Inc., LaFarge North America, and The Law Company, Inc.

On January 26th, 2011**,** the City's SSSC conducted interviews and selected LaFarge North America, Inc. to provide design/build services for the future ADA Compliant Ball Diamond in Orchard Park.

Analysis: The selection of a design/build company is an important step for the new ADA Compliant Ball Diamond. Once the selected company is under contract, important planning and design functions can begin and the construction process can proceed.

Financial Considerations: The 2010 Park CIP includes $294,000 for the improvement of facilities at Orchard Park funded with general obligation bonds. The total proposed fee for design build services from LaFarge is $360,054. To secure the necessary additional funding, the Park Department collaborated with the Love of Chance Foundation.

The Love of Chance Foundation is a 501(c)(3) corporation established to promote activities and opportunities for handicapped children. The foundation was established by Lanie Armstrong. The Children's Miracle Network and the Via Christi Medical Foundation authorizes grants to 501(c)(3) corporations. The Love of Chance Foundation applied for and received the grant from Via Christi.

The Love of Chance Foundation will contract with and pay LaFarge North America $66,054 and the City of Wichita will contract with and pay LaFarge North America $294,000.

Goal Impact: The initiation of this project will enhance the Quality of Life for citizens of Wichita and surrounding communities by increasing recreational opportunities and activities.

Legal Considerations: The Law Department has reviewed and approved this contract as to form.

Recommendation/Actions: It is recommended that the City Council approve the vendor selection, accept the donation from the Love of Chance Foundation, approve the contract and scope of services and authorize all necessary signatures.

Attachment: Contract between City of Wichita and LaFarge North America.

FINANCE DEPARTMENT
PURCHASING OFFICE
CITY HALL – TWELFTH FLOOR
455 NORTH MAIN STREET
WICHITA, KANSAS 67202
(316) 268-4636
(316) 268-4656 FAX
www.wichita.gov

August 29, 2011

LaFarge North America Inc.
9229 E. 37th St N #100
Wichita KS 67226

Dear Contractor:

This letter is to notify you that your firm is the successful proposer for the Design/Build of the ADA Compliant Synthetic Safety Surface Ball Diamond in Orchard Park (Formal Proposal - FP030070) for the Park & Recreation Department, Recreation Division of the City of Wichita. This is to be per your proposal and as per the specifications of December 8, 2010, to be approved by the City Council on September 13, 2011. The date the City Council approves the award of the proposal will be the date of the contract and bonds (September 13, 2011).

Please return the two (2) contracts and acceptable bonds in *duplicate*, and proof of insurance (unless you have a permanent one on file with the Finance Department/Purchasing Office), no later than September 7, 2011, to the Finance Department/Purchasing Office, Attention: Alexis A. Karas. Contractors are responsible for filing the Statutory bond with the Clerk of the District Court.

This letter also serves notice that if executed contracts and bonds are not returned by September 7, 2011, the City of Wichita reserves the right to negotiate a contract with the next highest ranked firm.

No work may occur on this project until such time as acceptable contracts and bonds are returned to this office.

Sincerely,

Alexis A. Karas
Buyer

Enclosures

REVISED NON-DISCRIMINATION AND
EQUAL EMPLOYMENT OPPORTUNITY/AFFIRMATIVE ACTION PROGRAM
REQUIREMENTS STATEMENT FOR CONTRACTS OR AGREEMENTS

During the term of this contract, the contractor or subcontractor, vendor or supplier of the City, by whatever term identified herein, shall comply with the following Non-Discrimination--Equal Employment Opportunity/Affirmative Action Program Requirements:

A. During the performance of this contract, the contractor, subcontractor, vendor or supplier of the City, or any of its agencies, shall comply with all the provisions of the Civil Rights Act of 1964, as amended: The Equal Employment Opportunity Act of 1972; Presidential Executive Orders 11246, 11375, 11131; Part 60 of Title 41 of the Code of Federal Regulations; the Age Discrimination in Employment Act of 1967; the Americans with Disabilities Act of 1990 and laws, regulations or amendments as may be promulgated thereunder.

B. Requirements of the State of Kansas:

1. The contractor shall observe the provisions of the Kansas Act against Discrimination (Kansas Statutes Annotated 44-1001, et seq.) and shall not discriminate against any person in the performance of work under the present contract because of race, religion, color, sex, disability, and age except where age is a bona fide occupational qualification, national origin or ancestry.
2. In all solicitations or advertisements for employees, the contractor shall include the phrase, "Equal Opportunity Employer", or a similar phrase to be approved by the "Kansas Human Rights Commission".
3. If the contractor fails to comply with the manner in which the contractor reports to the "Kansas Human Rights Commission" in accordance with the provisions of K.S.A. 1976 Supp. 44-1031, as amended, the contractor shall be deemed to have breached this contract and it may be canceled, terminated or suspended in whole or in part by the contracting agency.
4. If the contractor is found guilty of a violation of the Kansas Act against Discrimination under a decision or order of the "Kansas Human Rights Commission" which has become final, the contractor shall be deemed to have breached the present contract, and it may be canceled, terminated or suspended in whole or in part by the contracting agency.
5. The contractor shall include the provisions of Paragraphs 1 through 4 inclusive, of this Subsection B, in every subcontract or purchase so that such provisions will be binding upon such subcontractor or vendor.

C. Requirements of the City of Wichita, Kansas, relating to Non-Discrimination -- Equal Employment Opportunity/Affirmative Action Program Requirements:

1. The vendor, supplier, contractor or subcontractor shall practice Non-Discrimination -- Equal Employment Opportunity in all employment relations, including but not limited to employment, upgrading, demotion or transfer, recruitment or recruitment advertising, layoff or termination, rates of pay or other forms of compensation, and selection for training, including apprenticeship. The vendor, supplier, contractor or subcontractor shall submit an Equal Employment Opportunity or Affirmative Action Program, when required, to the Department of Finance of the City of Wichita, Kansas, in accordance with the guidelines established for review and evaluation.
2. The vendor, supplier, contractor or subcontractor will, in all solicitations or advertisements for employees placed by or on behalf of the vendor, supplier, contractor or subcontractor, state that all qualified applicants will receive consideration for employment without regard to race, religion, color, sex, "disability, and age except where age is a bona fide occupational qualification", national origin or ancestry. In all solicitations or advertisements for employees the vendor, supplier, contractor or subcontractor shall include the phrase, "Equal Opportunity Employer", or a similar phrase.
3. The vendor, supplier, contractor or subcontractor will furnish all information and reports required by the Department of Finance of said City for the purpose of investigation to ascertain compliance with Non-Discrimination -- Equal Employment Opportunity Requirements. If the vendor, supplier, contractor, or subcontractor fails to comply with the manner in which he/she or it reports to the City in accordance with the provisions hereof, the vendor, supplier, contractor or subcontractor shall be deemed to have breached the present contract, purchase order or agreement and it may be canceled, terminated or suspended in whole or in part by the City or its agency; and further Civil Rights complaints, or investigations may be referred to the State.
4. The vendor, supplier, contractor or subcontractor shall include the provisions of Subsections 1 through 3 inclusive, of this present section in every subcontract, subpurchase order or subagreement so that such provisions will be binding upon each subcontractor, subvendor or subsupplier.
5. If the contractor fails to comply with the manner in which the contractor reports to the Department of Finance, the contractor shall be deemed to have breached this contract and it may be canceled, terminated or suspended in whole or in part by the contracting agency.

D. Exempted from these requirements are:

1. Those contractors, subcontractors, vendors or suppliers who have less than four (4) employees, whose contracts, purchase orders or agreements cumulatively total less than five thousand dollars ($5,000) during the fiscal year of said City are exempt from any further Equal Employment Opportunity or Affirmative Action Program submittal.
2. Those vendors, suppliers, contractors or subcontractors who have already complied with the provisions set forth in this section by reason of holding a contract with the Federal government or contract involving Federal funds; provided that such contractor, subcontractor, vendor or supplier provides written notification of a compliance review and determination of an acceptable compliance posture within a preceding forty-five (45) day period from the Federal agency involved.

CONTRACT

123-032

THIS AGREEMENT made and entered into this 13th day of September, A.D. 2011, by and between the City of Wichita, a municipal corporation, hereinafter known as First Party, and

LaFarge North America Inc.

whose principal office is at 9229 E. 37th St N #100, Wichita KS 67226, hereinafter known as the Second Party.

WITNESSETH, That for and in consideration of covenants hereinafter set out the Second Party contracts, promises and agrees to and with the First Party that LaFarge North America Inc. will furnish all the material and labor necessary to perform the design, mechanical, electrical, plumbing and add alternates and/or options as required by the specifications and work orders for the City of Wichita Design/Build of the ADA Compliant Synthetic Safety Surface Ball Diamond in Orchard Park (Formal Proposal - FP030070) for the Park & Recreation Department, Recreation Division of the City of Wichita, Sedgwick County, Kansas. The proposal package, plans, specifications and addenda provided by the City of Wichita as part of the bid letting process for Formal Proposal FP030070, dated December 8, 2010, and the Second Party's proposal, as approved, shall be considered a part of this contract and are incorporated by reference herein, as approved by the City Council on September 13, 2011, which plans and specifications and proposals are on file in the office of the City Purchasing Manager of said City, and are hereby made a part of this contract to the same effect and as fully embodied herein.

Second Party further agrees that the work under this contract shall be completed to the full satisfaction of the City Purchasing Manager on or before January 2, 2012. Work shall be done under the direct supervision of said Purchasing Manager, or such other person as the City Council may direct, and that said Purchasing Manager's decision as to the material used in said improvement and the method in which the work is to be done shall be final and conclusive upon the parties hereto. Working days shall be as defined in the Standard Specifications of the City of Wichita.

Second party further agrees that at all times during the prosecution of said improvement, LaFarge North America Inc. will maintain the proper safeguards, barricades and lights on the work and every portion thereof to insure the highest degree of safety to the public and that LaFarge North America Inc. will hold the City of Wichita harmless in all claims and suits for damages brought against either of the parties to this contract on account of the negligent acts, omissions or default of said Second Party, their agents or servants in the prosecution of the work on said improvement.

Second Party further agrees to maintain said improvement for a period of one (1) year from date of the completion and acceptance of same by the City of Wichita, this maintenance to be done and performed by said Second Party without any expense to the First Party whatsoever. Second Party to furnish to First Party any manufacturer's warranty on materials as applicable.

Second Party shall furnish the First Party a good and sufficient bond guaranteeing the completion of said improvement and every part thereof according to the specifications and the bid of said Second Party and the terms of this contract; conditioned further, for the maintenance of said improvements as hereinbefore provided; and conditioned further, upon the holding of the City of Wichita harmless in all claims and suits for damages as specified in this contract.

Second Party shall furnish a bond to the State of Kansas in the total amount of this contract, conditioned upon the payment of all material and labor bills incurred in the making of said improvement.

For and in consideration of covenants promised and agreed to by the Second Party, the First Party will pay to Second Party, in cash, the following not-to-exceed amount for the contract work: $360,054.00.

The Second Party shall be entitled to payment of 95 percent of its progress estimates every thirty (30) days during the prosecution of said improvement; five (5) percent of the total amount being at all times retained until final completion, at which time Second Party shall be entitled to final payment.

If the Second Party fails to complete all requirements identified within these specifications by January 2, 2012, it is understood and the Second Party hereby agrees that the amount of two hundred dollars ($200.00) per calendar day to a maximum of the contract price may be deducted from the moneys due the Second Party for each intervening calendar day any work remains incomplete, not as a penalty but as liquidated damages. Second Party will not be liable if performance failure arises out of causes beyond their control and without fault or negligence of the Second Party (e.g., acts of God, war, fires, floods, freight embargoes). Should a performance failure occur, it will be the responsibility of the Second Party to notify the Purchasing Manager in writing and submit proof of the circumstance responsible for non-performance, the Second Party must re-negotiate delivery schedules.

The Second Party further agrees, notwithstanding anything to the contrary contained in the proposal documents or the contract to be awarded herein, that the City shall not be subject to arbitration and any clause relating to arbitration contained in the documents or in the contract to be awarded herein between the parties shall be null and void and either party shall have the right to litigate any dispute in a court of law.

The parties agree that this agreement is made in the State of Kansas, and its provisions shall be governed by the laws of the State of Kansas.

Third Party Rights. It is specifically agreed between the parties that it is not intended by any of the provisions of any part of this contract to create in the public or any member thereof third-party beneficiary status hereunder, or to authorize anyone not a party to this contract to maintain a suit for damages pursuant to the terms or provisions of this contract.

The contractor, in performing the work required under this contract, agrees to comply with the provisions of the "Revised Non-Discrimination and Equal Employment Opportunity Statement for Contracts or Agreement" of the City of Wichita, which is incorporated herein by reference.

For good cause, and as consideration for executing this contract, the contractor, acting herein by and through its authorized agent, hereby conveys, sells, assigns, and transfers to the City of Wichita all right, title, and interest in and to all causes of action it may now or hereafter acquire under the anti-trust laws of the United States and the State of Kansas relating to the particular product, products, or services purchased or acquired by the City of Wichita pursuant to this contract.

IN WITNESS WHEREOF, the City of Wichita has caused these presents to be signed by its Mayor and attested by its Clerk with the seal of the City of Wichita impressed thereon, and the Second Party has caused these presents to be duly executed the day and year first herein written.

Attest:

_____
Deputy City Clerk

Approved as to form this _____

_____
Director of Law

City of Wichita, Kansas

_____
Carl G. Brewer, Mayor

_____
LaFarge North America Inc.

By _____
(print or type name and title of authorized agent)

CONTRACT

123-032

THIS AGREEMENT made and entered into this 13th day of September, A.D. 2011, by and between the City of Wichita, a municipal corporation, hereinafter known as First Party, and

LaFarge North America Inc.

whose principal office is at 9229 E. 37th St N #100, Wichita KS 67226, hereinafter known as the Second Party.

WITNESSETH, That for and in consideration of covenants hereinafter set out the Second Party contracts, promises and agrees to and with the First Party that LaFarge North America Inc. will furnish all the material and labor necessary to perform the design, mechanical, electrical, plumbing and add alternates and/or options as required by the specifications and work orders for the City of Wichita Design/Build of the ADA Compliant Synthetic Safety Surface Ball Diamond in Orchard Park (Formal Proposal - FP030070) for the Park & Recreation Department, Recreation Division of the City of Wichita, Sedgwick County, Kansas. The proposal package, plans, specifications and addenda provided by the City of Wichita as part of the bid letting process for Formal Proposal FP030070, dated December 8, 2010, and the Second Party's proposal, as approved, shall be considered a part of this contract and are incorporated by reference herein, as approved by the City Council on September 13, 2011, which plans and specifications and proposals are on file in the office of the City Purchasing Manager of said City, and are hereby made a part of this contract to the same effect and as fully embodied herein.

Second Party further agrees that the work under this contract shall be completed to the full satisfaction of the City Purchasing Manager on or before January 2, 2012. Work shall be done under the direct supervision of said Purchasing Manager, or such other person as the City Council may direct, and that said Purchasing Manager's decision as to the material used in said improvement and the method in which the work is to be done shall be final and conclusive upon the parties hereto. Working days shall be as defined in the Standard Specifications of the City of Wichita.

Second party further agrees that at all times during the prosecution of said improvement, LaFarge North America Inc. will maintain the proper safeguards, barricades and lights on the work and every portion thereof to insure the highest degree of safety to the public and that LaFarge North America Inc. will hold the City of Wichita harmless in all claims and suits for damages brought against either of the parties to this contract on account of the negligent acts, omissions or default of said Second Party, their agents or servants in the prosecution of the work on said improvement.

Second Party further agrees to maintain said improvement for a period of one (1) year from date of the completion and acceptance of same by the City of Wichita, this maintenance to be done and performed by said Second Party without any expense to the First Party whatsoever. Second Party to furnish to First Party any manufacturer's warranty on materials as applicable.

Second Party shall furnish the First Party a good and sufficient bond guaranteeing the completion of said improvement and every part thereof according to the specifications and the bid of said Second Party and the terms of this contract; conditioned further, for the maintenance of said improvements as hereinbefore provided; and conditioned further, upon the holding of the City of Wichita harmless in all claims and suits for damages as specified in this contract.

Second Party shall furnish a bond to the State of Kansas in the total amount of this contract, conditioned upon the payment of all material and labor bills incurred in the making of said improvement.

For and in consideration of covenants promised and agreed to by the Second Party, the First Party will pay to Second Party, in cash, the following not-to-exceed amount for the contract work: $360,054.00.

The Second Party shall be entitled to payment of 95 percent of its progress estimates every thirty (30) days during the prosecution of said improvement; five (5) percent of the total amount being at all times retained until final completion, at which time Second Party shall be entitled to final payment.

If the Second Party fails to complete all requirements identified within these specifications by January 2, 2012, it is understood and the Second Party hereby agrees that the amount of two hundred dollars ($200.00) per calendar day to a maximum of the contract price may be deducted from the moneys due the Second Party for each intervening calendar day any work remains incomplete, not as a penalty but as liquidated damages. Second Party will not be liable if performance failure arises out of causes beyond their control and without fault or negligence of the Second Party (e.g., acts of God, war, fires, floods, freight embargoes). Should a performance failure occur, it will be the responsibility of the Second Party to notify the Purchasing Manager in writing and submit proof of the circumstance responsible for non-performance, the Second Party must re-negotiate delivery schedules.

The Second Party further agrees, notwithstanding anything to the contrary contained in the proposal documents or the contract to be awarded herein, that the City shall not be subject to arbitration and any clause relating to arbitration contained in the documents or in the contract to be awarded herein between the parties shall be null and void and either party shall have the right to litigate any dispute in a court of law.

The parties agree that this agreement is made in the State of Kansas, and its provisions shall be governed by the laws of the State of Kansas.

Third Party Rights. It is specifically agreed between the parties that it is not intended by any of the provisions of any part of this contract to create in the public or any member thereof third-party beneficiary status hereunder, or to authorize anyone not a party to this contract to maintain a suit for damages pursuant to the terms or provisions of this contract.

The contractor, in performing the work required under this contract, agrees to comply with the provisions of the "Revised Non-Discrimination and Equal Employment Opportunity Statement for Contracts or Agreement" of the City of Wichita, which is incorporated herein by reference.

For good cause, and as consideration for executing this contract, the contractor, acting herein by and through its authorized agent, hereby conveys, sells, assigns, and transfers to the City of Wichita all right, title, and interest in and to all causes of action it may now or hereafter acquire under the anti-trust laws of the United States and the State of Kansas relating to the particular product, products, or services purchased or acquired by the City of Wichita pursuant to this contract.

IN WITNESS WHEREOF, the City of Wichita has caused these presents to be signed by its Mayor and attested by its Clerk with the seal of the City of Wichita impressed thereon, and the Second Party has caused these presents to be duly executed the day and year first herein written.

Attest:

_____
Deputy City Clerk

Approved as to form this _____

_____
Director of Law

City of Wichita, Kansas

_____
Carl G. Brewer, Mayor

_____
LaFarge North America Inc.

By _____
(print or type name and title of authorized agent)

Via Christi
HEALTH

...because your life matters

Doctors
Hospitals
Senior Villages
Health Services

May 31, 2011

Lainie Armstrong
PO Box 624
Andover, KS 67002

Re: For the Love of Chance Center

Dear Lainie,

I am pleased to inform you that after consideration of grant requests by the Children's Miracle Network Hospitals (CMNH) Advisory Board, you have been awarded $60,000.00 to support the building of "Miracle Field" for children with special needs with the stipulation that the logo for CMNH and for "For the Love of Chance" be prominently displayed.

Keep in mind as a CMN grant recipient, you are required to file a progress report (form enclosed) no later than May 1, 2012, reflecting how the grant funds were utilized, the number of children benefiting, and how recognition was given to CMN for support of this project.

Any unspent funds remaining at the end of this grant award period will be resumed back to the Children's Miracle Network Hospitals program. To access this award, please send a check request, order form or invoice to the Foundation – attention Amy Wilgers. Please contact Blair Powell at 946-5040 should you need further assistance.

Congratulations on receiving this grant award.

Sincerely,

Jill Bosley

Jill Bosley
Director of Development
Children's Miracle Network and Via Christi Foundation

cc: (Name from Jill), Parks and Recreation Department

Via Christi Foundation, Inc.
723 N McLean • Suite 310 • Wichita, KS 67203 • viachristi.org • 316.946.5020

Via Christi
HEALTH

...because your life matters

Doctors
Hospitals
Senior Villages
Health Services

August 23, 2011

Lainie Armstrong
PO Box 624
Andover, KS 67002

Re: For the Love of Chance Center

Dear Lainie,

I am pleased to inform you that after consideration by the Children's Miracle Network Hospitals (CMNH) Advisory Board, you have been awarded an additional $6,054 to support the building of "Miracle Field" for children with special needs with the stipulation that the logo for CMNH and for "For the Love of Chance" be prominently displayed.

Keep in mind as a CMN grant recipient, you are required to file a progress report (form enclosed) no later than May 1, 2012, reflecting how the grant funds were utilized, the number of children benefiting, and how recognition was given to CMN for support of this project.

Any unspent funds remaining at the end of this grant award period will be resumed back to the Children's Miracle Network Hospitals program. To access this award, please send a check request, order form or invoice to the Foundation – attention Amy Wilgers. Please contact Blair Powell at 946-5040 should you need further assistance.

Congratulations on receiving this grant award.

Sincerely,

Jill Bosley

Jill Bosley
Director of Development
Children's Miracle Network and Via Christi Foundation

cc: (Name from Jill), Parks and Recreation Department

Via Christi Foundation and Children's Miracle Network (Via Christi Foundation, Inc.)
723 N McLean, Suite 310 • Wichita, KS 67203 • viachristi.org/foundation • 316.946.5020

CITY OF WICHITA

CONTRACT

123-032

THIS AGREEMENT made and entered into this 13th day of September, A.D. 2011, by and between the City of Wichita, a municipal corporation, hereinafter known as First Party, and

LaFarge North America Inc.

whose principal office is at **9229 E. 37th St N #100, Wichita KS 67226**, hereinafter known as the Second Party.

WITNESSETH, That for and in consideration of covenants hereinafter set out the Second Party contracts, promises and agrees to and with the First Party that LaFarge North America Inc. will furnish all the material and labor necessary to perform the design, mechanical, electrical, plumbing and add alternates and/or options as required by the specifications and work orders for the City of Wichita **Design/Build of the ADA Compliant Synthetic Safety Surface Ball Diamond in Orchard Park** (Formal Proposal - FP030070) for the Park & Recreation Department, Recreation Division of the City of Wichita, Sedgwick County, Kansas. The proposal package, plans, specifications and addenda provided by the City of Wichita as part of the bid letting process for Formal Proposal FP030070, dated December 8, 2010, and the Second Party's proposal, as approved, shall be considered a part of this contract and are incorporated by reference herein, as approved by the City Council on September 13, 2011, which plans and specifications and proposals are on file in the office of the City Purchasing Manager of said City, and are hereby made a part of this contract to the same effect and as fully embodied herein.

Second Party further agrees that the work under this contract shall be completed to the full satisfaction of the City Purchasing Manager on or before **January 2, 2012**. Work shall be done under the direct supervision of said Purchasing Manager, or such other person as the City Council may direct, and that said Purchasing Manager's decision as to the material used in said improvement and the method in which the work is to be done shall be final and conclusive upon the parties hereto. Working days shall be as defined in the Standard Specifications of the City of Wichita.

Second party further agrees that at all times during the prosecution of said improvement, LaFarge North America Inc. will maintain the proper safeguards, barricades and lights on the work and every portion thereof to insure the highest degree of safety to the public and that LaFarge North America Inc. will hold the City of Wichita harmless in all claims and suits for damages brought against either of the parties to this contract on account of the negligent acts, omissions or default of said Second Party, their agents or servants in the prosecution of the work on said improvement.

Second Party further agrees to maintain said improvement for a period of one (1) year from date of the completion and acceptance of same by the City of Wichita, this maintenance to be done and performed by said Second Party without any expense to the First Party whatsoever. Second Party to furnish to First Party any manufacturer's warranty on materials as applicable.

Second Party shall furnish the First Party a good and sufficient bond guaranteeing the completion of said improvement and every part thereof according to the specifications and the bid of said Second Party and the terms of this contract; conditioned further, for the maintenance of said improvements as hereinbefore provided; and conditioned further, upon the holding of the City of Wichita harmless in all claims and suits for damages as specified in this contract.

Second Party shall furnish a bond to the State of Kansas in the total amount of this contract, conditioned upon the payment of all material and labor bills incurred in the making of said improvement.

For and in consideration of covenants promised and agreed to by the Second Party, the First Party will pay to Second Party, in cash, the following not-to-exceed amount for the contract work: **$360,054.00**.

The Second Party shall be entitled to payment of 95 percent of its progress estimates every thirty (30) days during the prosecution of said improvement; five (5) percent of the total amount being at all times retained until final completion, at which time Second Party shall be entitled to final payment.

If the Second Party fails to complete all requirements identified within these specifications by **January 2, 2012**, it is understood and the Second Party hereby **agrees that the amount of two hundred dollars ($200.00) per calendar day to a maximum of the contract price may be deducted from the moneys due** the Second Party for each intervening calendar day any work remains incomplete, not as a penalty but as liquidated damages. Second Party will not be liable if performance failure arises out of causes beyond their control and without fault or negligence of the Second Party (e.g., acts of God, war, fires, floods, freight embargoes). Should a performance failure occur, it will be the responsibility of the Second Party to notify the Purchasing Manager in writing and submit proof of the circumstance responsible for non-performance, the Second Party must re-negotiate delivery schedules.

The Second Party further agrees, notwithstanding anything to the contrary contained in the proposal documents or the contract to be awarded herein, that the City shall not be subject to arbitration and any clause relating to arbitration contained in the documents or in the contract to be awarded herein between the parties shall be null and void and either party shall have the right to litigate any dispute in a court of law.

The parties agree that this agreement is made in the State of Kansas, and its provisions shall be governed by the laws of the State of Kansas.

Third Party Rights. It is specifically agreed between the parties that it is not intended by any of the provisions of any part of this contract to create in the public or any member thereof third-party beneficiary status hereunder, or to authorize anyone not a party to this contract to maintain a suit for damages pursuant to the terms or provisions of this contract.

The contractor, in performing the work required under this contract, agrees to comply with the provisions of the "Revised Non-Discrimination and Equal Employment Opportunity Statement for Contracts or Agreement" of the City of Wichita, which is incorporated herein by reference.

For good cause, and as consideration for executing this contract, the contractor, acting herein by and through its authorized agent, hereby conveys, sells, assigns, and transfers to the City of Wichita all right, title, and interest in and to all causes of action it may now or hereafter acquire under the anti-trust laws of the United States and the State of Kansas relating to the particular product, products, or services purchased or acquired by the City of Wichita pursuant to this contract.

IN WITNESS WHEREOF, the City of Wichita has caused these presents to be signed by its Mayor and attested by its Clerk with the seal of the City of Wichita impressed thereon, and the Second Party has caused these presents to be duly executed the day and year first herein written.

Attest:

Deputy City Clerk

Approved as to form this 9-5-11

Director of Law

City of Wichita, Kansas

Carl G. Brewer, Mayor

LaFarge North America Inc.

By Steve Lawler, General Mgr.

(print or type name and title of authorized agent)

BOND TO THE CITY OF WICHITA

Bond # 019032917

KNOW ALL MEN BY THESE PRESENTS: That LAFARGE NORTH AMERICA INC. of the State of Kansas in the City of Wichita and having authority to do business in the State of Kansas, as principal, and SAFECO INSURANCE COMPANY OF AMERICA a surety corporation of Washington and authorized to do business in the State of Kansas, as surety hereon, are held and firmly bound unto the City of Wichita in the just and lawful sum of Three Hundred Sixty Thousand Fifty Four and 00/100 ($360,054.00) Dollars, good and lawful money of the United States of America, to the payment of which the said principal hereby binds itself, its heirs, administrators, executors, successors, trustees, and assigns, and the said surety hereby binds itself, its successors, trustees, and assigns, all jointly and severally, firmly by these presents.

Signed, sealed, and dated at Philadelphia, PA, this 13th day of September, 2011 A.D.

THE CONDITION OF THE ABOVE OBLIGATION is such that whereas the said principal, LAFARGE NORTH AMERICA INC. of 9229 E 37th Street North, Suite 100, Wichita, KS 67226 has this 13th day of September 2011 A.D. entered into a contract with the City of Wichita to furnish all of the materials and labor necessary to construct and complete a certain public improvement in the City of Wichita, as follows:

Design/Build of the ADA Compliant Synthetic Safety Surface Ball Diamond in Orchard Park (Former Proposal - FP030070)

according to the plans and specifications therefor, heretofore approved by the City Council of the City of Wichita, and on file in the Purchasing Office of the City of Wichita, and within the time and in compliance with every provision of said contract, and to maintain the same for a period of __1__ year from date of completion, all in accordance with and as provided in said contract.

NOW THEREFORE if said principal shall well and faithfully and fully comply with all the requirements in the contract for said improvement, and shall complete same according to the terms thereof, and shall maintain said improvement in the manner and form set forth and required by said contract for the period of ____1____ year from date of completion, and shall save and hold the City of Wichita harmless for all claims and suits brought against it, or the City of Wichita for damages to property or injury to persons occasioned by or growing out of the construction of said improvement, or the failure or neglect of said principal to carry out said contract, or to complete and maintain said improvement and the works thereon as provided by the terms and provisions of said contract, then in that case, the obligation to be void; otherwise to be and remain full force and effect.

IN WITNESS WHEREOF, The said principal has executed and surety has caused these presents to be signed by its duly authorized Attorney-In-Fact the day and year herein written.

LAFARGE NORTH AMERICA INC.
Principal

By _____
(Signature)

Steve Lawler, Gen Mgr.
(print or type name and title)

SAFECO INSURANCE COMPANY OF AMERICA
Surety

By _____
Elizabeth Marrero, Attorney-in-Fact

_____
City Attorney

Approved as to form: 9-5-11

SLF/slf (Revised 03/99)

11SB0300

FILED

APP DOCKET NO._____

2011 SEP -2 P 2:00

CLERK OF DIST. COURT
18TH JUDICIAL DISTRICT
SEDGWICK COUNTY, KS

BY_____

BOND TO THE STATE OF KANSAS

STATUTORY PAYMENT BOND

(G.S. Kan. 60-1111, as amended)

Bond # 019032917

KNOW ALL MEN BY THESE PRESENTS, That we LAFARGE NORTH AMERICA INC.

9229 E 37th Street North, Suite 100, Wichita, KS 67226

as Principal, and SAFECO INSURANCE COMPANY OF AMERICA

1001 4th Avenue, Suite 1700, Seattle, WA 98154

as Surety, are jointly and severally bound unto the State of Kansas in the sum of _____

Three Hundred Sixty Thousand Fifty Four and 00/100

Dollars ($ 360,054.00 ----------), for the use and benefit of persons entitled thereto for which Payment shall well and truly be made, we hereby bind ourselves, our successors, heirs and executors and administrators, jointly and severally, firmly by these presents.

THE CONDITION OF THIS OBLIGATION IS SUCH, THAT

WHEREAS, the said LAFARGE NORTH AMERICA INC.

has entered into a written contract with the City of Wichita, Kansas, for certain work in connection with the

Design/Build of the ADA Compliant Synthetic Safety Surface Ball Diamond in Orchard Park (Former Proposal - FP030070)

District Court Bond # _____

Wichita, Kansas, under date of September 13, 2011

NOW, THEREFORE, if the said Principal or the subcontractor or subcontractors of said Principal shall pay all indebtedness incurred for labor furnished, materials, equipment, or supplies used or consumed in connection with or in or about the construction of or in making such public improvement, this obligation shall be void; otherwise, it shall remain in full force and effect.

IN WITNESS WHEREOF, the parties hereto have caused this instrument to be executed and delivered this 13th day of September, 2011.

LAFARGE NORTH AMERICA INC.
Principal

WITNESS:
Jenna Engels

By
(Signature)

Steve Lawler, Gen. Mgr.
(print or type name and title)

SAFECO INSURANCE COMPANY OF AMERICA
Surety

By
Elizabeth Marrero, Attorney-In-Fact

SFL/sfl (3/99)

Liberty Mutual.

POWER
OF ATTORNEY

Safeco Insurance Company of America
General Insurance Company of America
1001 4th Avenue
Suite 1700
Seattle, WA 98154

No. 5014

KNOW ALL BY THESE PRESENTS:

That **SAFECO INSURANCE COMPANY OF AMERICA** and **GENERAL INSURANCE COMPANY OF AMERICA,** each a Washington corporation, does each hereby appoint

*SANDRA E. BRONSON; ROSEMARIE CAPONI; RICHARD A. JACOBUS; DENNIS C. LAUSIER; ELIZABETH MARRERO; MAUREEN MCNEILL; WAYNE G. MCVAUGH; MARY C. O'LEARY; ADRIENNE SEAFORD; DOUGLAS R. WHEELER; DARELLA E. WHITE; Philadelphia, Pennsylvania**********

its true and lawful attorney(s)-in-fact, with full authority to execute on its behalf fidelity and surety bonds or undertakings and other documents of a similar character issued in the course of its business, and to bind the respective company thereby.

IN WITNESS WHEREOF, SAFECO INSURANCE COMPANY OF AMERICA and GENERAL INSURANCE COMPANY OF AMERICA have each executed and attested these presents

this 21st day of March, 2009.

Dexter R. Legg

Dexter R. Legg, Secretary

T A Mikolajewski

Timothy A. Mikolajewski, Vice President

CERTIFICATE

Extract from the By-Laws of **SAFECO INSURANCE COMPANY OF AMERICA** and of **GENERAL INSURANCE COMPANY OF AMERICA:**

"Article V, Section 13. - FIDELITY AND SURETY BONDS ... the President, any Vice President, the Secretary, and any Assistant Vice President appointed for that purpose by the officer in charge of surety operations, shall each have authority to appoint individuals as attorneys-in-fact or under other appropriate titles with authority to execute on behalf of the company fidelity and surety bonds and other documents of similar character issued by the company in the course of its business... On any instrument making or evidencing such appointment, the signatures may be affixed by facsimile. On any instrument conferring such authority or on any bond or undertaking of the company, the seal, or a facsimile thereof, may be impressed or affixed or in any other manner reproduced; provided, however, that the seal shall not be necessary to the validity of any such instrument or undertaking."

Extract from a Resolution of the Board of Directors of **SAFECO INSURANCE COMPANY OF AMERICA** and of **GENERAL INSURANCE COMPANY OF AMERICA** adopted July 28, 1970.

"On any certificate executed by the Secretary or an assistant secretary of the Company setting out,
(i) The provisions of Article V, Section 13 of the By-Laws, and
(ii) A copy of the power-of-attorney appointment, executed pursuant thereto, and
(iii) Certifying that said power-of-attorney appointment is in full force and effect,
the signature of the certifying officer may be by facsimile, and the seal of the Company may be a facsimile thereof."

I, Dexter R. Legg, Secretary of **SAFECO INSURANCE COMPANY OF AMERICA** and of **GENERAL INSURANCE COMPANY OF AMERICA,** do hereby certify that the foregoing extracts of the By-Laws and of a Resolution of the Board of Directors of these corporations, and of a Power of Attorney issued pursuant thereto, are true and correct, and that both the By-Laws, the Resolution and the Power of Attorney are still in full force and effect.

IN WITNESS WHEREOF, I have hereunto set my hand and affixed the facsimile seal of said corporation

this 13th day of September, 2011.

SAFECO INSURANCE COMPANY OF AMERICA CORPORATE SEAL 1953 STATE OF WASHINGTON

GENERAL INSURANCE COMPANY OF AMERICA CORPORATE SEAL 1923 State of Washington

Dexter R. Legg

Dexter R. Legg, Secretary

S-0974/DS 3/09

WEB PDF

SAFECO INSURANCE COMPANY OF AMERCIA

FINANCIAL STATEMENT — DECEMBER 31, 2010

Assets	
Cash and Bank Deposits	$ 163,744,280
*Bonds — U.S Government	228,018,693
*Other Bonds	2,089,990,931
*Stocks	484,312,099
Real Estate	0
Agents' Balances or Uncollected Premiums	494,794,328
Accrued Interest and Rents	28,237,369
Other Admitted Assets	348,886,430
Total Admitted Assets	**$3,837,984,130**

Liabilities		
Unearned Premiums		$ 737,679,970
Reserve for Claims and Claims Expense		1,660,405,822
Funds Held Under Reinsurance Treaties		0
Reserve for Dividends to Policyholders		142,479
Additional Statutory Reserve		0
Reserve for Commissions, Taxes and Other Liabilities		594,850,030
Total		**2,993,078,301**
Special Surplus Funds	$ 24,314,698	
Capital Stock	5,000,000	
Paid in Surplus	580,930,179	
Unassigned Surplus	234,660,952	
Surplus to Policyholders		**844,905,829**
Total Liabilities and Surplus		**$3,837,984,130**

SAFECO INSURANCE COMPANY OF AMERICA CORPORATE SEAL 1953 STATE OF WASHINGTON

* Bonds are stated at amortized or investment value; Stocks at Association Market Values.
The foregoing financial information is taken from Safeco Insurance Company's financial statement filed with the state of Washington Department of Insurance.

I, TIM MIKOLAJEWSKI, Vice-President of Safeco Insurance Company of America, do hereby certify that the foregoing is a true, and correct statement of the Assets and Liabilities of said Corporation, as of December 31, 2010, to the best of my knowledge and belief.

IN WITNESS WHEREOF, I have hereunto set my hand and affixed the seal of said Corporation at Seattle, Washington, this 30th day of March, 2011.

T A Mikolajewski

Vice-President

S-1262SA/a 2/11

ACORD

CERTIFICATE OF LIABILITY INSURANCE

DATE(MM/DD/YYYY) 07/20/2011

THIS CERTIFICATE IS ISSUED AS A MATTER OF INFORMATION ONLY AND CONFERS NO RIGHTS UPON THE CERTIFICATE HOLDER. THIS CERTIFICATE DOES NOT AFFIRMATIVELY OR NEGATIVELY AMEND, EXTEND OR ALTER THE COVERAGE AFFORDED BY THE POLICIES BELOW. THIS CERTIFICATE OF INSURANCE DOES NOT CONSTITUTE A CONTRACT BETWEEN THE ISSUING INSURER(S), AUTHORIZED REPRESENTATIVE OR PRODUCER, AND THE CERTIFICATE HOLDER.

IMPORTANT: If the certificate holder is an ADDITIONAL INSURED, the policy(ies) must be endorsed. If SUBROGATION IS WAIVED, subject to the terms and conditions of the policy, certain policies may require an endorsement. A statement on this certificate does not confer rights to the certificate holder in lieu of such endorsement(s).

PRODUCER
Aon Risk Services Central, Inc.
Philadelphia PA Office
One Liberty Place
1650 Market Street
Suite 1000
Philadelphia PA 19103 USA

CONTACT NAME:
PHONE (A/C, No, Ext): (866) 283-7122 FAX (A/C, No.): (847) 953-5390
E-MAIL ADDRESS:

INSURER(S) AFFORDING COVERAGE		NAIC #
INSURER A:	National Union Fire Ins Co of Pittsburgh	19445
INSURER B:	Insurance Company of the State of PA	19429
INSURER C:	Granite State Insurance Company	23809
INSURER D:	Illinois National Insurance Co	23817
INSURER E:	New Hampshire Ins Co	23841
INSURER F:		

INSURED
LAFARGE NORTH AMERICA
LAFARGE WEST, INC.
3500 N. WEST STREET
WICHITA KS 67204 USA

COVERAGES CERTIFICATE NUMBER: 570043295890 REVISION NUMBER:

THIS IS TO CERTIFY THAT THE POLICIES OF INSURANCE LISTED BELOW HAVE BEEN ISSUED TO THE INSURED NAMED ABOVE FOR THE POLICY PERIOD INDICATED. NOTWITHSTANDING ANY REQUIREMENT, TERM OR CONDITION OF ANY CONTRACT OR OTHER DOCUMENT WITH RESPECT TO WHICH THIS CERTIFICATE MAY BE ISSUED OR MAY PERTAIN, THE INSURANCE AFFORDED BY THE POLICIES DESCRIBED HEREIN IS SUBJECT TO ALL THE TERMS, EXCLUSIONS AND CONDITIONS OF SUCH POLICIES. LIMITS SHOWN MAY HAVE BEEN REDUCED BY PAID CLAIMS. Limits shown are as requested

INSR LTR	TYPE OF INSURANCE	ADDL INSR	SUBR WVD	POLICY NUMBER	POLICY EFF (MM/DD/YYYY)	POLICY EXP (MM/DD/YYYY)	LIMITS	
A	GENERAL LIABILITY X COMMERCIAL GENERAL LIABILITY CLAIMS-MADE X OCCUR GEN'L AGGREGATE LIMIT APPLIES PER: POLICY X PRO-JECT LOC			GL9723096 (OCC)	07/01/2011	07/01/2012	EACH OCCURRENCE	$2,000,000
							DAMAGE TO RENTED PREMISES (Ea occurrence)	$500,000
							MED EXP (Any one person)	$50,000
							PERSONAL & ADV INJURY	$2,000,000
							GENERAL AGGREGATE	$2,000,000
							PRODUCTS - COMP/OP AGG	$2,000,000
A	AUTOMOBILE LIABILITY X ANY AUTO ALL OWNED AUTOS SCHEDULED AUTOS HIRED AUTOS NON-OWNED AUTOS			CA 1607650	07/01/2011	07/01/2012	COMBINED SINGLE LIMIT (Ea accident)	$2,000,000
A				CA 1607651 (MA)	07/01/2011	07/01/2012	BODILY INJURY (Per person)	
A				CA 1607652 (DR)	07/01/2011	07/01/2012	BODILY INJURY (Per accident)	
A				CA 1607653 (VA)	07/01/2011	07/01/2012	PROPERTY DAMAGE (Per accident)	
	UMBRELLA LIAB OCCUR EXCESS LIAB CLAIMS-MADE DED RETENTION						EACH OCCURRENCE	
							AGGREGATE	
B	WORKERS COMPENSATION AND EMPLOYERS' LIABILITY ANY PROPRIETOR/PARTNER/EXECUTIVE OFFICER/MEMBER EXCLUDED? (Mandatory in NH) Y/N N If yes, describe under DESCRIPTION OF OPERATIONS below	N/A		WC005145487(AOS)	07/01/2011	07/01/2012	X WC STATU-TORY LIMITS OTH-ER	
C				WC005145488 (CA)	07/01/2011	07/01/2012	E.L. EACH ACCIDENT	$2,000,000
D				WC005145489 (FL)	07/01/2011	07/01/2012	E.L. DISEASE-EA EMPLOYEE	$2,000,000
D				WC026149465	07/01/2011	07/01/2012	E.L. DISEASE-POLICY LIMIT	$2,000,000
D				WC005145491(MI)	07/01/2011	07/01/2012		
A	Excess WC			WC5145490 XS Workers Compensation (SIR applies per policy terms & conditions	07/01/2011	07/01/2012	EL Each Accident EL Disease - Policy EL Disease - Ea Emp	$2,250,000 $2,250,000 $2,250,000

DESCRIPTION OF OPERATIONS / LOCATIONS / VEHICLES (Attach ACORD 101, Additional Remarks Schedule, if more space is required)

APPROVED AS TO FORM THIS 7-20-11
by E Roberts/19 IW
Director of Law

CERTIFICATE HOLDER

City of Wichita
Attn: Loretta-Purchasing
455 N Main St
Wichita KS 67202 USA

CANCELLATION

SHOULD ANY OF THE ABOVE DESCRIBED POLICIES BE CANCELLED BEFORE THE EXPIRATION DATE THEREOF, NOTICE WILL BE DELIVERED IN ACCORDANCE WITH THE POLICY PROVISIONS.

AUTHORIZED REPRESENTATIVE

Aon Risk Services Central Inc.

Holder Identifier :

Certificate No : 570043295890

©1988-2010 ACORD CORPORATION. All rights reserved.
The ACORD name and logo are registered marks of ACORD

Attachment to ACORD Certificate for LAFARGE NORTH AMERICA

The terms, conditions and provisions noted below are hereby attached to the captioned certificate as additional description of the coverage afforded by the insurer(s). This attachment does not contain all terms, conditions, coverages or exclusions contained in the policy.

INSURED

LAFARGE NORTH AMERICA
LAFARGE WEST, INC.
3500 N. WEST STREET
WICHITA KS 67204 USA

INSURER
INSURER
INSURER
INSURER
INSURER

ADDITIONAL POLICIES

If a policy below does not include limit information, refer to the corresponding policy on the ACORD certificate form for policy limits.

INSR LTR	TYPE OF INSURANCE	ADDL INSR	SUBR WVD	POLICY NUMBER/ POLICY DESCRIPTION	POLICY EFF (MM/DD/YYYY)	POLICY EXP (MM/DD/YYYY)	LIMITS	
	WORKERS COMPENSATION							
B		N/A		WC005145492 (NJ)	07/01/2011	07/01/2012		
A		N/A		WC005145493 (OR)	07/01/2011	07/01/2012		
B		N/A		WC005145494 (WI)	07/01/2011	07/01/2012		
B		N/A		WC005145495 (TX) Workers Compensation TX	07/01/2011	07/01/2012		
E		N/A		WC015883676(MN) Workers Compensation (MN)	07/01/2011	07/01/2012		

Certificate No : 570043295890

City of Wichita
City Council Meeting
September 13, 2011

TO: Mayor and City Council Members

SUBJECT: Removal of Nuisance Abatement Special Property Tax Assessment
1832 North Lorraine Street (District I)

INITIATED BY: Office of Central Inspection

AGENDA: Consent

Recommendation: Approve and authorize removal of the City of Wichita nuisance abatement special property tax assessment on property at 1832 North Lorraine Street, which was previously approved for assessment by the City Council.

Background: The Office of Central Inspection supports neighborhood code enforcement through abatement of nuisances under Titles 7 and 8 of the City Code. State statutes and City ordinances allow the City to abate properties that are in violation of environmental standards after proper notification to responsible parties. Private contractors perform the work, and the Office of Central Inspection bills the cost of abatement to property owners. State statutes and City ordinances allow placement of billed but unpaid abatement costs as special property tax assessments after City Council approval.

Analysis: On January 26, 2010, the City Council approved special property tax assessments of unpaid City abatement billings for numerous properties, including a $205 assessment on 1832 North Lorraine Street for towing of an inoperable vehicle from the property. The property owner of 1832 North Lorraine Street recently appealed the $205 nuisance abatement special property tax assessment. After reviewing case records, talking with the property owner and discussing the case with Office of Central Inspection staff, it was determined by the Superintendent of Central Inspection that improper notice of the abatement action, which occurred on April 16, 2009, was provided to the property owner (who did not own the vehicle). The Superintendent of Central Inspection further determined that the vehicle towing special assessment should be removed.

Financial Considerations: The Office of Central Inspection nuisance abatement contractors are paid through budgeted appropriations from the City's General Fund. Placement of special property tax assessments provides for potential reimbursement of these expenditures to the City. Removal of this special property tax assessment has a total value, including filing fees and accrued interest, of $245.91.

Goal Impact: The abatement and assessment program supports Core Area and Vibrant Neighborhoods by continuing cleanup and abatement for properties that are detrimental to Wichita neighborhoods.

Legal Considerations: Upon City Council approval, the City's Debt Coordinator may be directed to prepare necessary paperwork to remove the special property tax assessment.

Recommendation/Action: It is recommended that the City Council approve removal of the $205 nuisance abatement special property tax assessment, plus filing fees and accrued interest charges, for the property at 1832 North Lorraine Street.

Attachment: None.

Agenda Item No. II-17

City of Wichita
City Council Meeting
September 13, 2011

TO: Mayor and City Council Members

SUBJECT: Midwest Financial Investigations Task Force

INITIATED BY: Wichita Police Department

AGENDA: Consent

Recommendation: Approve the agreements and authorize the appropriate signatures.

Background: In early 2009, the Internal Revenue Service and the United States Attorney's Office requested the Wichita Police Department's participation in the Midwest Financial Investigations Task Force, which focused on criminal investigations of suspicious financial transactions. The Wichita Police Department assigned one detective from the Special Investigations Bureau to work with IRS and U.S. Attorney's Office.

By federal law, there are specific criteria which exist that make it compulsory for banks with FDIC status to notify the IRS and local police about suspicious transactions. The IRS, in conjunction with local police/sheriff, then may investigate the "money trail" of the transactions to see if illegal activities exist in connection with the currency. The task force investigates these suspicious transactions involving large sums of money.

In the event the cash transaction results from criminal activity (drug sales, tax evasion, etc.) the Task Force, through the IRS federally seizes the money and files asset forfeiture paperwork to confiscate the money. The agreement is scheduled to extend through September 30, 2012.

Analysis: As a member of the Midwest Financial Investigations Task Force, the federal government reimburses the Wichita Police Department for overtime and operating expenditures incurred by the detective assigned to the Task Force. The reimbursement is dependent on hours worked, with a total authorized budget of $ 29,000. In addition, the Wichita Police Department is eligible to participate in the distribution of forfeiture proceeds from any investigations.

Financial Consideration: There is no direct fiscal cost to the Police Department from this agreement. Any additional costs incurred will be reimbursed by the federal government.

Goal Impact: Provide a Safe and Secure Community.

Legal Consideration: The Law Department has reviewed and approved the agreement as to form.

Recommendation/Action: Approve the agreements and authorize the Mayor to sign.

Attachments: Midwest Financial Investigations Task Force Memorandum of Understanding and Agreement between Treasury Law Enforcement Agencies and Local, County, and State Law Enforcement Agencies for the Reimbursement of Expenses.

AGREEMENT BETWEEN TREASURY LAW ENFORCEMENT AGENCIES
and
LOCAL, COUNTY AND STATE LAW ENFORCEMENT AGENCIES
FOR THE REIMBURSEMENT OF EXPENSES

****

This agreement is entered into by the Wichita Police Department and Internal Revenue Service, Criminal Investigation, for the purpose of receiving reimbursable costs incurred by the Wichita, Kansas Police Department in providing resources to joint operations/task forces.

Payments may be made to the extent they are included in the Treasury law enforcement agency's Fiscal Year Plan, and the monies are available within the Treasury Forfeiture Fund to satisfy the request(s) for reimbursable overtime expenses.

I. LIFE OF THIS AGREEMENT

This agreement is effective on the date it is signed by both parties and terminates on the last day of the current Fiscal Year. Agreements are required on a Fiscal Year basis and must be renewed, if appropriate, by September 30th of each Fiscal Year for the following Fiscal Year.

II. AUTHORITY

This agreement is established pursuant to the provisions of 31 U.S.C. 9703, the Treasury Forfeiture Fund Act of 1992, which provides for the reimbursement of certain expenses of local, county, and state law enforcement agencies incurred as participants in joint operations/task forces with a Department of the Treasury law enforcement agency.

III. PURPOSE OF THIS AGREEMENT

This agreement establishes the procedures and responsibilities of both the Wichita, Kansas Police Department and the Criminal Investigation, Internal Revenue Service, for the reimbursement of certain overtime and other expenses pursuant to 31 U.S.C. 9703.

IV. NAME OF TASK FORCE/JOINT OPERATION (If Applicable)

The Name of this Task Force is Midwest Financial Investigative Task Force

Projected Dates of Remaining Operation: October 1, 2011 to September 30, 2012.

V. CONDITIONS AND PROCEDURES

A. Assignment of Wichita, Kansas Police Department Officers

To the maximum extent possible, Wichita Police Department shall assign dedicated officer(s) to the Task Force/Joint Operations.

The Wichita Kansas Police Department shall provide the Criminal Investigation, Internal Revenue Service, with the names, titles, badge or ID numbers of the officer(s) assigned to the Task Force/joint Operation in an attachment to this agreement.

B. Requests for Reimbursement of Overtime Expenses

1. The Wichita Kansas Police Department may request reimbursement for payment of overtime expenses directly related to work performed by its officer(s) assigned as members of a Joint Task Force/Operation with the Criminal Investigation, Internal Revenue Service, for the purpose of conducting official Treasury investigations.

2. The Wichita Kansas Police Department shall provide the Criminal Investigation, Internal Revenue Service, within 10 days of the signing of this agreement, a mandatory ACH Vendor Payment Enrollment Form for Electronic Funds Transfer.

3. Invoices submitted for the payment of overtime to Wichita Kansas Police Department officer(s) shall be submitted on the agency's letterhead. The invoice shall be signed by an authorized representative of that agency.

4. The Wichita Kansas Police Department will submit all requests for reimbursable payments together with appropriate documentation to the Criminal Investigation, Internal Revenue Service, ATTN: Special Agent Rob Jackson, 2850 NE Independence Ave, Suite 102, Lee's Summit, Missouri 64064

   The Wichita Kansas Police Department shall certify that the request is for overtime expenses incurred by the Wichita Kansas Police Department for Participation with a joint operation conducted with the Criminal Investigation, Internal Revenue Service. The Wichita Kansas Police Department shall also certify that requests for reimbursement of overtime expenses have not been made to other Federal law enforcement agencies who may also be participating with the task force/joint operation.

The Wichita Kansas Police Department acknowledges that they remain fully responsible for their obligations as the employer of the officer(s) assigned to the task force/joint operation and are responsible for the payment of overtime earnings, withholdings, insurance coverage and all other requirements by law, regulation, ordinance or contract regardless of the reimbursable overtime charges incurred.

5. All requests for reimbursement of costs incurred by the Wichita Kansas Police Department must be approved and certified by the Criminal Investigation, Internal Revenue Service. The Treasury law enforcement agency shall countersign the invoices for payment.

6. All requests for reimbursement of costs are to be received by Criminal Investigation, Internal revenue Service no later than 15 days after the previous month end. These requests for reimbursement are to be for a full month time period, from the first day to the last day of the month. *There should not be invoices covering only part of the month, as in 1/10/04 – 1/25/04.*

7. The Wichita Kansas Police Department is limited to a maximum reimbursement for all overtime expenses in connection with this operation of $12,500 per year under this agreement. By statute, no single officer may earn more than $15,000.00 per fiscal year in overtime regardless of the number of agreements he/she is authorized on. Travel and related expenses should not exceed a maximum of $16,500 for this task force/joint operation for the Fiscal Year period.

8. The total dollar value of this agreement may be adjusted at anytime by Criminal Investigation, Internal Revenue Service based upon the following:

   A) The Criminal Investigation, Internal Revenue Service may modify the total dollar obligation, resulting in an increase or decrease, if they determine that the original obligated amount is not commensurate with the rate of reimbursable requests, based on their analysis of submitted reimbursement requests.

   B) The adjustments to the total dollar value of this agreement may result in a partial and/or total reduction of reimbursement funds requested. Any modification made to an authorized agreement will be documented in writing and immediately provided to the impacted state and local agency.

C. PROGRAM AUDIT

This agreement and its procedures are subject to audit by the Criminal Investigation, Internal Revenue Service, Department of the Treasury, Office of Inspector General, the General Accounting Office, and other government designated auditors. The Wichita Kansas Police Department agrees to permit such audits and agrees to maintain all records relating to these transactions for a period of not less than three years; and in the event of an on-going audit, until the audit is completed.

These audits may include reviews of any and all records, documents, reports, accounts, invoices, receipts or expenditures relating to this agreement; as well as the interview of any and all personnel involved in these transactions.

D. REVISIONS

The terWichita Kansas Police Departmentms of this agreement may be amended upon the written approval of both the Wichita Kansas Police Department and the Criminal Investigation, Internal Revenue Service. The revision becomes effective upon the date of approval.

E. NO PRIVATE RIGHT CREATED

This is an internal government agreement between a Treasury Law Enforcement Agency and the Wichita Kansas Police Department, a Local/County/State Law Enforcement Agency, and is not intended to confer any right or benefit to any private person or party.

****

Signature Date:	Signature Date:
Norman D. Williams Chief of Police Wichita Kansas Police Department	Toni Weirauch Special Agent In Charge Criminal Investigation St. Louis Field Office Internal Revenue Service
Signature Date:	Signature Date:
Printed Name Title Chief Financial Officer Wichita Kansas Police Department	Donald Yaden Director, Warrants & Forfeitures Criminal Investigation Internal Revenue Service Washington, DC

AGREEMENT BETWEEN THE INTERNAL REVENUE SERVICE, CRIMINAL INVESTIGATION and THE WICHITA KANSAS POLICE DEPARTMENT FOR EQUITABLE SHARING FROM ASSET SEIZURE AND FORFEITURE

This agreement is entered into by the Wichita, KS Police Department and the Internal Revenue Service, Criminal Investigation, for the purpose of equitable sharing from asset seizure and forfeiture by the Wichita, KS Police Department pursuant to a joint operation/task force.

I. LIFE OF THIS AGREEMENT

This agreement is effective on the date it is signed by both parties and terminates on September 30, 2012. Agreements are required on a Fiscal Year basis and must be renewed, if appropriate, by September 30th of each Fiscal Year for the following Fiscal Year.

II. AUTHORITY

This agreement is established pursuant to the provisions of Department of Treasury Guide to Equitable Sharing for Foreign Countries and Federal, State, or Local Law Enforcement Agencies which provides for that equitable sharing can only occur after the federal forfeiture has been completed, the United States has taken clear title to the property, and a final sharing decision has been made by the appropriate Treasury official.

III. PURPOSE OF THIS AGREEMENT

This agreement establishes the procedures and responsibilities of both the Wichita, KS Police Department and the Internal Revenue Service, Criminal Investigation, for equitable sharing from asset seizure and forfeiture pursuant to the Department of Treasury Guide to Equitable Sharing for Foreign Countries and Federal, State, or Local Law Enforcement Agencies.

IV. NAME OF JOINT OPERATION/TASK FORCE

The name of this task force is the Midwest Financial Investigations Task Force.

Project dates of operation: October 1, 2011 – September 30, 2012.

V. CONDITIONS AND PROCEDURES

A. Assignment of Wichita, KS Police Department Officers

To the maximum extent possible, the Wichita, KS Police Department shall assign dedicated officers to the joint operations/task forces.

The Wichita, KS Police Department shall provide the Internal Revenue Service, Criminal Investigation, with the names, titles, badge or ID numbers of the officers to the joint operation/task force in an attachment to this agreement.

B. Request for Equitable Sharing

1. The Wichita, KS Police Department may request an equitable share of forfeited property, or the net proceeds of forfeited property from the direct or indirect participation of an investigation or prosecution resulting in a Federal forfeiture by the Internal Revenue Service, Criminal Investigation.

2. Equitable sharing is based upon net proceeds of the forfeiture. Net proceeds are defined as the gross receipts from forfeiture or sale of the forfeited property less:

   A. Payments to third-party interest.
   B. Payments for CI case-related expenses.
   C. Payments to informants as they relate to the seizure/forfeiture.
   D. Treasury property management expenses and/or any payments for reimbursement from the Treasury Forfeiture Fund to the Wichita, KS Police Department relating to the seizure/forfeiture.

3. Treasury policy directs that sharing reflect the degree of direct or indirect participation of the agency in the law enforcement effort that resulted in the forfeiture. Normally the criterion in this determination involves the number of hours expended by the Wichita, KS Police Department and the Internal Revenue Service, expressed as a percentage of the total.

   All sharing is within the discretionary authority of the Department of the Treasury, 18 U.S.C. 981(e)(2), and the Secretary of the Treasury's Guidelines on Seized and Forfeited Property.

4. There may be times, where hours expended on the investigation by the Wichita, KS Police Department do not fully reflect its assistance in the seizure/forfeiture. Additional factors may be considered to justify sharing percentages. Additional justification should be in writing and in sufficient narrative form as an attachment to Treasury Form TDF 92-22.46 (Request for the Equitable Sharing of Federally Forfeited Property).

5. The Treasury Forfeiture Fund will retain at least 20 percent of the net proceeds in all seizure-related investigation, the remaining 80 percent or less will be allocated between the Wichita, KS Police Department, the other participating departments, and the Internal Revenue Service based upon the criteria outlined in paragraph 3 and 4 of this section.

6. If a seizure consists of a single asset, which is requested by the Wichita, KS Police Department, the Internal Revenue Service shall recover its cost and its equitable share. If the Wichita, KS Police Department is unable to pay the Internal Revenue Service's cost and equitable share, the property shall be sold and the proceeds equitably distributed.

7. The Wichita, KS Police Department will request a share of the forfeiture property by submitting a Treasury Form TDF 92-22.46 (Request for the Equitable Sharing of Federally Forfeited Property) to the St. Louis, Missouri Field Office Asset Forfeiture Coordinator (AFC). Treasury Form TDF 92-22.46 must be submitted within 60 calendar days of the effective seizure date. The 60 day rule may be waived based upon a written request to the St. Louis Field Office Asset Forfeiture Coordinator (AFC) stating the reasons for the late submission of the equitable sharing request and provide specific justification for the waiver. The waiver should be accompanying the Treasury Form TDF 92-22.46.

8. The Wichita, KS Police Department must be aware of specific limitations imposed upon the use of equitable shared property as set forth in Section X of the Treasury Guide to Equitable Sharing.

C. AUDIT

If the Wichita, KS Police Department receives more than $100,000.00 in shared cash, proceeds, or tangible property from the Internal Revenue Service, Criminal Investigation in a single fiscal year, the Wichita, KS Police Department must ensure that a standard financial audit is performed annually, consistent with the guidelines in Appendix D and E of the Treasury Equitable Sharing Guide. An independent accounting firm may be engaged to perform the required audit and may be paid from shared cash or proceeds. The audit report must be sent to the Director, Executive Office for Asset Forfeiture, Department of the Treasury, Suite 700, 740 15th Street NW, Washington, DC 20220.

At the conclusion of the fiscal year for the Wichita, KS Police Department, the agency must also prepare the Annual Certification Report contained in the Department of the Treasury Guide to Equitable Sharing, Appendix D. The Annual Certification Report must also be sent to the Director, Executive Office for Asset Forfeiture.

D. REVISIONS

The terms of this agreement may be amended upon the written approval of both the Wichita, KS Police Department and the Internal Revenue Service, Criminal Investigation. The revisions become effective upon the date of approval.

E. NO PRIVATE RIGHT CREATED

This is an internal government agreement between the Internal Revenue Service, Criminal Investigation, a Treasury law enforcement agency, and the Wichita, KS Police Department, a local law enforcement agency, and is not intended to confer any right or benefit to any private individual or party.

Toni M. Weirauch
Special Agent in Charge
Internal Revenue Service, Criminal Investigation
St. Louis Field Office

Date

Norman Williams
Chief of Police
Wichita, Kansas Police Department

8-1-2011
Date

Midwest Financial Investigations Task Force

MEMORANDUM OF UNDERSTANDING

PURPOSE

This Memorandum of Understanding (MOU) is executed in order to memorialize the agreement and set forth the terms and conditions between the following listed agencies, which have agreed to combine investigative efforts

Internal Revenue Service, Criminal Investigation
Wichita, Kansas Police Department

MISSION OF THE TASK FORCE

The mission of the task force will be to develop and assist with criminal investigations and asset forfeitures of illegal activities. The emphasis of the task force is to pursue investigations on individuals and organizations that will result in criminal prosecutions and large asset forfeitures.

PERSONNEL

1) During the period of the assignment, the representatives remain under the supervision of their respective departments.

2) IRS, Criminal Investigation, will assign one Senior Special Agent/Coordinator and one additional Special Agent and/or investigative analyst. The IRS, Criminal Investigation will be responsible for the management, supervision and coordination of all investigative and operational activities.

3) Task Force personnel shall adhere to all Department of Treasury and IRS, CI policies and procedures, except were Treasury and/or IRS policies are in conflict with the policies and procedures of the members parent agency. In these instances, the parent agency will request in writing to the Task Force coordinator that their employee follow the policies and procedures of the parent agency. If the Task Force coordinator does not assent to the request, the SAC and Chief Law Enforcement Officer of the respective agencies will resolve the matter. Failure to adhere to established policies and procedures may be grounds for immediate removal of the officers from the task force.

4) Personnel assigned to the task force shall be designated as full or part time in accordance with an agreement of their respective agencies. It is understood that personnel assigned to the task force may continue to have duties (training, administrative duties, etc.) that are linked to their respective agency. Additional personnel may be allowed to participate on a case by case basis.

5) It is agreed that the task force coordinator will contact the immediate supervisor or other agency designee of any personnel assigned whose performance or conduct is questioned. Any related matters will be coordinated with the supervisor/designee.

6) During the period of assignment, each agency representative will report to his/her respective agency for personnel administrative matters. Each agency shall be responsible for pay, overtime, annual leave, and performance evaluations, etc. of its own employees. Agencies will be reimbursed for overtime, related travel, vehicle

leases and miscellaneous expenses from the Treasury Forfeiture Fund, upon submission of Department of Treasury Form 9972, Request for Reimbursement of Joint Operation Expenses. This form, with necessary documentation, will be submitted monthly to the IRS task force coordinator.

ADMINISTRATIVE ISSUES:

7) All computer and related equipment assigned to the task force personnel will be used for official purposes only, and remains the property of the task force.

8) The IRS coordinator will be responsible for the oversight and administration of all Federal grants and equitable sharing distributions.

9) The IRS, CI will provide all necessary secretarial, clerical, automation and technical support for the task force.

10) In no event will the member agencies charge the IRS for administration or implementation of this memorandum of understanding.

11) All members of the task force agree not to knowingly act unilaterally on any matter affecting the task force without first coordinating with the IRS coordinator.

DEPUTATION

12) Personnel from state and local law enforcement agencies assigned full time to the task force shall be cross-designated as IRS Task Force Officers.

13) No action will be taken by any task force officer, utilizing their federal authority, without approval of the IRS coordinator.

INVESTIGATIVE MATTERS

14) The IRS will provide the necessary funds for the operational expenses, and for the purchase of evidence and information that relates to investigations and intelligence gathering.

15) The task force investigative procedure will conform to the requirements for Federal prosecution. A determination will be made on a case by case basis whether the prosecution of cases will be at the State or Federal level. The criteria for the decision will be which level of prosecution would better advance the interests of justice.

16) Access to and use of task force records will be in accordance with Federal Law and Department of Treasury and IRS regulations and policy, including but not limited to the Freedom of Information and Privacy Acts.

17) The IRS is responsible for tax administration and the investigation of criminal violations of the Internal Revenue Code, (Title 26, United States Code). Internal Revenue Code, Section 6103, restricts the disclosure of tax or tax return information except as provided by Section 6103. Reports recommending the prosecution of persons for criminal tax violations are subject to review by IRS counsel. Prosecution reports must also be referred to the Department of Justice (Tax Division) for their review and approval prior to prosecution.

INFORMANTS

18) All confidential and cooperating witnesses exclusively developed though the task force will be opened as IRS informants, sources, assets or cooperating witnesses, and handled in accordance with IRS guidelines, policy and procedures.

19) IRS, as permitted by Federal law, agrees to pay reasonable and necessary informant expenses incurred by the task force. The IRS must approve all informant related expenses before they are incurred.

FORFEITURE

20) Assets seized in connection with the task force will be forfeited under Federal and/or State laws. The IRS coordinator will recommend the equitable sharing percentage for participating agencies for all assets seized during the course of task force investigations. An agreement on equitable sharing has been set out for each participating agency, and is an attachment to this document.

21) All sharing is within the discretionary authority of the Department of the Treasury, as provided by 18 U.S.C. 981(e)(2), and the Secretary of the Treasury's Guidelines on Seized and Forfeited Property.

MEDIA

22) All media issues will be coordinated with the SAC and Public Information Officer of the IRS. All press releases and/or contacts will be pursuant to U.S. Attorney Guidelines.

TRAVEL

23) All task force related travel shall require the approval of the agency employing the individual. All individuals will be responsible for securing his/her own agency's approval for all travel.

24) For international travel, the IRS will obtain country clearances for all task force members. For domestic travel, each agency member will be responsible for appropriate notifications within their own agency.

25) Reimbursement for overtime, related travel, vehicle leases and miscellaneous expenses will be requested from the Treasury Asset Forfeiture Fund. Each participating agency will submit required documentation to the IRS coordinator monthly for travel reimbursement.

LIABILITY

26) Unless specifically addressed by the terms of this MOU, the parties agree to be responsible for the negligent or wrongful acts or omissions of their respective employees. Legal representation by the U.S. is determined by the Department of Justice (DOJ) on a case-by-case basis. The IRS cannot guarantee the U.S. will provide legal representation to any Federal or State law enforcement officer or employee.

27) Congress has provided that the exclusive remedy for the negligent or wrongful act or omission of an employee of the U.S. government, acting within the scope of

his/her employment, shall be an action against the U.S. under the Federal Tort Claims Act (FTCA), 28 U.S.C., Section 1346(b), and Sections 2671 - 2680.

28) For the limited purpose of defending claims arising out of TASK FORCE activity, state officers who have been specifically deputized, and who are acting within the course and scope of their official duties and assignments, pursuant to this MOU, may be considered an "employee" of the U.S. government, as defined in 28 U.S.C., Section 2671. See 5 U.S.C., Section 3374(c)(2).

29) Under the Federal Employees Liability Reform and Tort Compensation Act of 1998 (commonly known as the Westfall Act), 28 U.S.C., Section 2679(b)(1), the Attorney General or his/her designee may certify that an individual defendant acted within the scope of his employment at the time of the incident giving rise to the suit. ID., 28 U.S.C., Section 2679(d)(2). The U.S. can then be substituted for the employee as the sole defendant with respect to any tort claims. 28 U.S.C. Section, 2679(d)(2). If the U.S. is substituted as defendant, the individual employee is thereby protected from suits in his official capacity.

30) If the Attorney General declines to certify that an employee was acting within the scope of employment, "the employee may at any time before trial petition the court to find and certify that the employee was acting within the scope of his office or employment." 28 U.S.C., Section 2679(d)(3).

31) Liability for any negligent or willful acts of TASK FORCE members, undertaken outside the terms of this MOU will be the sole responsibility of the respective employee and agency involved.

32) Liability for violations of Federal constitutional law rests with the individual Federal agent or officer pursuant to Bivens v. Six Unknown Named Agents of the Federal Bureau of Narcotics. 403 U.S. 388 (1971) or pursuant to 42 U.S.C., Section 1983 for state officers or cross-deputized federal officers.

33) Both state and federal officers enjoy qualified immunity from suit for constitutional torts, "insofar as their conduct does not violate clearly established statutory or constitutional rights of which a reasonable person would have known." Harlow v. Fitzgerald. 457 U.S. 800 (1982).

34) Task force officers may request representation by the U.S. Department of Justice for civil suits against them in their individual capacities for actions taken within the scope of employment. 28 C.F.R., Sections 50.15, 50.16.

35) An employee may be provided representation "when the actions for which representation is requested reasonably appears to have been performed within the scope of the employee's employment, and the Attorney General, or his/her designee, determines that providing representation would otherwise be in the interest of the U.S." 28 C.F.R., Section 50.15(a).

36) If a task force officer is found to be liable for a constitutional tort, he/she may request indemnification from DOJ to satisfy an adverse judgement rendered against the employee in his/her individual capacity. 28 C.F.R., Section 50.15(c)(4). The criteria for payment are substantially similar to those used to determine whether a Federal employee is entitled to DOJ representation under 28 C.F.R., Section 50.15(a).

DURATION:

37) The term of this MOU shall be from October 1, 2011 - September 30, 2012, renewable at the end of each fiscal year. Upon termination of the task force, or withdrawal by an agency, all equipment will be returned to the IRS.

38) The provisions of the LIABILITY section will continue until all potential liabilities have lapsed.

OTHER:

39) To the extent there is any conflict between Federal Law and the law of The State of Kansas, Federal law controls. While Kansas law may be used to aid in the interpretation of provisions of the MOU which are not specifically covered by Federal law, it cannot be used to the extent it is inconsistent with any Federal law.

40) The terms of this Agreement are not intended to alter, amend, or rescind any current agreement or provision of Federal law now in effect. Any provision of this MOU which conflicts with Federal law will be null and void.

41) This MOU does not confer any rights or benefits on any third party,

42) This Agreement may be amended at any time by mutual written consent of all Parties.

The undersigned agree to their agency will participate in the Midwest Financial Investigations Taskforce Force, and agrees that their agency will abide by the policies set forth herein this agreement.

Toni M. Weirauch Special Agent in Charge Internal Revenue Service, Criminal Investigation St. Louis Field Office	Date
Norman D. Williams Chief of Police Wichita, Kansas Police Department	8-1-2011 Date

REQUEST TO ESTABLISH REIMBURSEMENT FOR LOCAL, COUNTY, AND STATE LAW ENFORCEMENT AGENCIES PARTICIPATING IN JOINT LAW ENFORCEMENT OPERATIONS WITH TREASURY LAW ENFORCEMENT AGENCIES

TREASURY AGENCY: IRS Criminal Investigation	**OCDETF CASE:** ☐ YES ☒ NO	TEOAF TRACKING NUMBER (WILL BE ASSIGNED BY TEOAF)
MAILING ADDRESS: 2850 NE Independence Ave Suite 102 Lee's Summit, Missouri 64064	**OCDETF CASE #:** **FOR OVERTIME:** ☐ YES ☒ NO **FOR OTHER:** ☒ YES ☐ NO	
CONTACT PERSON: Special Agent Rob Jackson	**CONTACT TELEPHONE NUMBER:** (816) 966.2563 **REQUEST DATE:** 08/01/2011	
TREASURY AGENCY FIELD OFFICE APPROVAL (NAME & SIGNATURE) **Toni M. Weirauch** **Special Agent in Charge**	**TREASURY AGENCY HEADQUARTERS APPROVAL (NAME & SIGNATURE & DATE)** **Strown Martin**	

FULL NAME, ADDRESS, TELEPHONE AND TAXPAYER IDENTIFICATION NUMBER OF LOCAL, COUNTY, STATE AGENCY	EXPENSES TO BE REIMBURSED	ESTIMATED COSTS
Wichita Police Department Attn: WPD Fiscal Affairs 455 N. Main, 4th Floor Wichita, KS 67202 EIN: 48-6000653	Reimbursement of OT Travel & Misc Expenses	$12,500.00 $16,500.00
TFF APPROVAL AND DATE		TOTAL ESTIMATED COSTS $29,000.00
ACCOUNTING DATA: BFYS: BUDPLN: PROGRAM:	FUND: ORG: OCC:	

DEPARTMENT OF THE TREASURY
LOCAL, COUNTY, AND STATE LAW ENFORCEMENT AGENCY
REIMBURSEMENT REQUEST FOR OVERTIME COSTS AND AUTHORIZED EXPENSES
ATTACHMENT TO AGREEMENT

TO: ☐ ATF ☒ IRS ☐ USCS ☐ USSS

NAME OF AGENCY: **Wichita Police Department**
ADDRESS: **455 N. Main, 4th Floor**
Wichita, KS 67202
TAX IDENTIFICATION #: **48-6000653**
CONTACT PERSON: **Clint Snyder**
TITLE: Detective TELEPHONE: **(316) 352-7264**

DATE OF REQUEST: 08/01/2011
OCDETF CASE: ☐ YES ☒ NO
OCDETF CASE #:
TEOAF TRACKING #:

ADDITIONAL INFORMATION ON OFFICER(S)

NAMES OF OFFICERS	TITLE(S)/RANK	BADGE OR ID#	SSN	DOB	DATE OF LAST FIREARMS QUAL
Clint Snyder	Detective	1250	514-80-5424	08.28.62	03.29.10

City of Wichita
City Council Meeting
September 13, 2011

TO: Mayor and City Council

SUBJECT: Resolutions Authorizing Congestion Mitigation and Air Quality (CMAQ) grant from the Federal Transit Administration (All Districts)

INITIATED BY: Wichita Transit

AGENDA: Consent

Recommendation: Approve the resolutions.

Background: The Federal Transit Administration (FTA) grant application process requires a resolution by the governing body authorizing staff to file grant applications to receive funds and administer the grant's program. The purpose of the resolution is to authorize staff to file for eligible federal funds to pass through to the Cerebral Palsy Research Foundation of Kansas (CPRFK) to provide dialysis rides outside the City limits. Congestion Mitigation and Air Quality (CMAQ) funds are Federal Highway Administration (FHWA) funds that are transferred to the FTA for use for transit services. A second resolution is required by the Kansas Department of Transportation (KDOT) to pledge sufficient matching funds. CPRFK will provide the matching funds but, as the designated recipient, the City of Wichita is required to sign the KDOT resolution.

Analysis: CPRFK will provide dialysis rides to those inside the urbanized area but outside the City limits. Wichita Transit does not provide rides outside the City limits. Transit staff held a public hearing on September 1, 2011, with no adverse comments.

Financial Consideration: The total grant request is $150,000. The federal share is $120,000, and the local match of $30,000 will be funded by CPRFK per the agreement attached.

Goal Impact: Funding from this grant will support Wichita Transit's role in Ensuring Efficient and Effective Infrastructure by maintaining and optimizing public facilities and assets.

Legal Consideration: The Law Department has reviewed and approved the resolution authorizing filing the grant as to form, the KDOT form resolution pledging sufficient matching funds, and the Interlocal Agreement for CMAQ Grant between the City of Wichita and CPRFK.

Recommendation/Actions: It is recommended that the City Council approve the resolutions and the agreement and authorize the necessary signatures.

Attachments: Resolution authorizing filing the grant; KDOT form resolution pledging sufficient matching funds; Interlocal Agreement for CMAQ Grant

RESOLUTION NO. 11-220

A RESOLUTION AUTHORIZING THE FILING OF AN APPLICATION WITH THE FEDERAL TRANSIT ADMINISTRATION, AN OPERATING ADMINISTRATION OF THE UNITED STATES DEPARTMENT OF TRANSPORTATION, FOR FEDERAL TRANSPORTATION ASSISTANCE AUTHORIZED BY 49 U.S.C., AND OTHER FEDERAL STATUTES ADMINISTERED BY THE FEDERAL TRANSIT ADMINISTRATION TO SUPPORT FY 2012 CONGESTION MITIGATION AND AIR QUALITY (CMAQ) PROJECTS

WHEREAS, the Federal Transportation Administrator has been delegated authority to award federal financial assistance for transportation projects; and

WHEREAS, the grant or cooperative agreement for federal financial assistance will impose certain obligations upon the City of Wichita and may require the City to provide the local share of the project cost; and

WHEREAS, the City of Wichita has or will provide all annual certifications and assurances to the Federal Transit Administration required for the project; and

WHEREAS, the City of Wichita desires financial assistance for support of the following projects: Pursuant to CMAQ – Congestion Mitigation and Air Quality: CPRFK dialysis services.

NOW, THEREFORE, BE IT RESOLVED BY THE GOVERNING BODY OF THE CITY OF WICHITA, KANSAS:

1. That the City Manager or designee is authorized to execute and file an application on behalf of the City of Wichita, Kansas, with the Federal Transit Administration for federal assistance under 49 U.S.C., United States Code, or other federal statutes authorizing a project administered by the Federal Transit Administration to aid in financing 49 U.S.C.

2. That the City Manager or designee is authorized to execute and file with its application the annual certifications and assurances and other documents the Federal Transit Administration requires before awarding a federal assistance grant or cooperative agreement.

3. That the City Manager or designee is authorized to execute the grant and cooperative agreements with the Federal Transit Administration on behalf of the City of Wichita.

CERTIFICATION

The undersigned duly-qualified Mayor, acting on behalf of the City of Wichita, which is the recipient of CMAQ assistance under the provisions of 49 U.S.C., certifies that the foregoing is a true and correct copy of a resolution adopted at a legally-convened meeting of the City of Wichita.

ADOPTED at Wichita, Kansas on September 13, 2011.

_____
Carl Brewer, Mayor

Attest:

_____
Karen Sublett, MMC, City Clerk

(seal)

Approved as to Form:

_____
Gary E. Rebenstorg, City Attorney and Director of Law

KANSAS DEPARTMENT OF TRANSPORTATION

BUREAU OF LOCAL PROJECTS

REQUEST FOR CONGESTION MITIGATION AND AIR QUALITY (CMAQ)

IMPROVEMENT PROGRAM PROJECT

County/City: _____

WHEREAS, The Secretary of Transportation of the State of Kansas, hereinafter referred to as the "Secretary," has been designated as an agent for _____ under an agreement dated _____ , or, will be designated as an agent for _____under an agreement to be executed at a later date and,

WHEREAS, the Federal-Aid Highway Act of 1956, as amended, and subsequent acts and amendments, provides Federal-Aid funds to assist the counties, cities, and other political sub-divisions in improving their roads and streets and congestion mitigation activities that provide air quality benefits, and,

WHEREAS, The above-noted county/city desires to improve a certain portion of their road or street system or other related project that will contribute to air quality improvements and reduce congestion, now, therefore,

WHEREAS, The county/city request the Secretary program the following Congestion Mitigation Air Quality Improvement project _____

_____

_____

ESTIMATED costs of such improvements are as follows:

Federal Funds	$ _____
Local Funds	$ _____
ESTIMATED Total for Project	$ _____
Proposed Let Date	_____

Submit One (1) Copy of the document along with Approved TIP documentation

BE IT RESOLVED: That sufficient funds of _____ County/City are now, or will be available and are hereby pledged to the Secretary in the amount and at the time required for the supplementing of federal funds available for the completion of this project. Prior to Federal Authorization, any project expenditures made by the County/City are ineligible for federal funding and remain the responsibility of the County/City. Upon cancellation of the project by the County/City, the County/City shall reimburse the Secretary within thirty (30) days after receipt of statement of cost incurred by the Secretary prior to cancellation.

Day _____ Month _____ Year _____, at _____, Kansas.

Recommend for Approval: APPROPRIATE LOCAL OFFICIAL(S)

_____ _____

County/City Engineer or Administrator Chairperson/Mayor

ATTEST: _____

Member

_____ _____

County/City Clerk Member

DOT Form 1312 (Original 3/10)

INTERLOCAL AGREEMENT
For CONGESTION, MITIGATION AND AIR QUALITY grant

This interlocal agreement (Agreement) is entered into by and between the City of Wichita, Kansas ("WICHITA") and the Cerebral Palsy Research Foundation ("CPRF").

WICHITA and CPRF both operate public transportation services within the WICHITA metropolitan area, and are committed to continuing such services in a cooperative and coordinated manner. The purpose of this Agreement is to provide for allocation of federal funds available under the Federal-Aid Highway Act of 1956, as amended, ("Act") to provide ongoing support for congestion mitigation activities provided by WICHITA and CPRF. It is, therefore, mutually agreed as follows:

1. **Term.** The Agreement shall be effective upon execution by all parties hereto and shall be effective FY 2012, terminating after receipt of final payment, unless terminated earlier as allowed below.

2. **Operations and Management.** WICHITA and CPRF shall each be solely responsible for the separate operation and management of their respected public transportation systems. WICHITA and CPRF agree to act with due diligence and good faith in the exercise of the operation and management of their respective transit systems to comply with the terms of this Agreement and to work together in a mutually supportive manner to ensure the implementation of all provisions contained in this Agreement. WICHITA agrees to assist CPRF in set-up guidance for proper reimbursement and payout documents, data submission for the National Transit Database, etc. CPRF will be responsible for scheduling an annual meeting with WICHITA for review and future planning.

3. **Allocation of FY2012 Section 5307 Funds.** For FY2012, CPRF shall be designated by WICHITA to be a subgrantee (pass-through) recipient to receive CMAQ (CFDA 20.507) funding that is converted into Section 5307 funds to provide operations funding for dialysis rides outside the Wichita City limits. Section 5307 funding requires all subgrantee (pass-through) recipients to fund 20% of the total cost as a local match; the Federal Transit Administration (FTA) provides the remaining 80% federal portion for the total cost of the project. The total allocation for the operating functions for CPRF's transportation system for FY2012 is **$150,000**; the federal portion is **$120,000** and CPRF's portion is **$30,000** for the required 20% local match.

4. **Application for Section 5307 Funding.** WICHITA shall apply to the FTA for funding under Paragraph 3. The funds received by CPRF shall be matched at an appropriate percentage (20% of the total allocation) by local funds secured by CPRF and shall be available for use by CPRF, as its Board of Directors deems appropriate within the FTA requirements, as set out in Exhibit C and D attached.

5. **Future Section 5309 Applications.** WICHITA and CPRF shall cooperate to pursue applications as may be appropriate for capital grants under Section 5309, which shall include funds for capital acquisitions by CPRF.

6. **Carryover of Funds.** Funds allocated to CPRF pursuant to Paragraphs 4 and 5 may be carried over.

7. **Future Allocation of 5307 Funds.** Based on the availability of CMAQ funds, CPRF may be subject to less apportionment than the $120,000 Federal portion available for allocation in a fiscal year. This will be determined during the annual planning meeting.

8. **Compliance with Laws.** WICHITA and CPRF hereby agree, in the performance of this Agreement, to comply with all applicable federal, state, and local laws, including specifically all relevant requirements of the Act, as appropriate, which may separately and individually apply to their respective jurisdictions.

9. **Extension of Agreement.** WICHITA and CPRF may extend this Agreement on a year-to-year basis with written approval of both parties. Funds are secured in the agreement year and subject to be spent within FTA requirements.

10. **Establishment and Maintenance of Records.** CPRF shall establish and maintain records as prescribed by WICHITA, with respect to all matters covered by this Agreement. Except as otherwise authorized by WICHITA, CPRF shall retain such financial and nonfinancial related records for a period of three (3) years after receipt of the final payment under this Agreement or termination of this Agreement. However, if any litigation, claim, negotiation, audit, oversight or other action involving the records has been started before the expiration of the three-year period, the records must be retained until the completion of the action and resolution of issues which arise from it or until the end of the regular three-year period, whichever is later.

11. **Reports and Information.** CPRF, at such times and in such forms as WICHITA or its designates and authorized representative(s) may require, shall furnish to WICHITA, the FTA, or their designated and authorized representative(s) such statements, records, reports, data, and information as they may request pertaining to matters covered by this Agreement.

12. **Audits and Inspections.** CPRF shall, at anytime, and as often as WICHITA may deem necessary, make available to WICHITA, or its designated and authorized representative(s), for examination of all its records and data pertaining to matters covered by this Agreement for the purpose of making audits, oversights, examinations, excerpts, and transcriptions. CPRF is required to provide WICHITA with access to their single audit report, if applicable.

13. Per OMB Circular A-133: **Pass-through Entity Responsibilities**. A pass-through entity shall perform the following for the federal awards it makes:

    a. Identify federal awards made by informing each subrecipient of CFDA title and number, award name and number, award year, if the award is R&D, and name of federal agency. When some of this information is not available, the pass-through entity shall provide the best information available to describe the federal award.

    b. Advise subrecipients of requirements imposed on them by federal laws, regulations, and the provisions of contracts or grant agreements as well as any supplemental requirements imposed by the pass-through entity.

    c. Monitor the activities of subrecipients as necessary to ensure that federal awards are used for authorized purposes in compliance with laws, regulations, and the provisions of contracts or grant agreements and that performance goals are achieved.

    d. Ensure that subrecipients expending $300,000 *($500,000 for fiscal years ending after December 31, 2003)* or more in federal awards during the subrecipient's fiscal year have met the audit requirements of this part for that fiscal year.

    e. Issue a management decision on audit findings within six months after receipt of the subrecipient's audit report and ensure that the subrecipient takes appropriate and timely corrective action.

f. Consider whether subrecipient audits necessitate adjustment of the pass-through entity's own records.

g. Require each subrecipient to permit the pass-through entity and auditors to have access to the records and financial statements as necessary for the pass-through entity to comply with this part.

14. **Discrimination.**

a. **Discrimination Prohibited.** No recipient or proposed recipient of any services or other assistance under the provisions of this Agreement or any program related to this Agreement shall be excluded from participation in, be denied the benefits of, or be subjected to discrimination under any program or activity funded in whole or in part with the funds made available through this Agreement on the grounds of race, color, national origin, ancestry, religion, physical handicap, sex, or age. (Reference Title VI of the Civil Rights Act of 1964 – Pub. L. 88-352). For purposes of this section, "program or activity" is defined as any function conducted by an identifiable administrative unit of CPRF receiving funds pursuant to this Agreement.

b. CPRF further agrees to implement and comply with the "Revised Nondiscrimination and Equal Employment Opportunity Statement" for contracts or Agreements as provided in Exhibit A attached hereto and to specifically comply with the requirements of the Americans with Disabilities Act of 1990, as amended.

15. **Payments.**

a. **Compensation and Method of Payment.** Compensation and method of payment to CPRF relative to conducting the operations of the project activities and services as herein described will be carried out as specified in Exhibit B attached hereto and will be administered under the established accounting and fiscal policies of WICHITA.

b. **Total Payments.** Total payments to CPRF will be in the contracted amount of $120,000 FTA portion starting January 1, 2012.

c. **Restriction on Disbursements.** No grant funds shall be disbursed to CPRF or a contractor except pursuant to a written contract that incorporates by reference the general conditions of this Agreement.

16. **Termination Clause.** Whenever either of the parties hereto determines that termination of this Agreement is in such party's best interest, then the Agreement may be terminated by giving written notification to the other party. A determination may include, but not be limited to:

a. Failure of either party to comply with any or all items contained within Sections 1 through 15 of this Agreement, contract exhibits, and/or provisions of any subsequent contractual amendments executed relative to this Agreement;

b. This Agreement may be terminated if project funds to WICHITA under the grant are suspended or terminated;

c. Either party hereto may also, by giving thirty (30) days notice, terminate this Agreement for convenience; and

d. Upon receipt of notice of termination, CPRF shall: (1) discontinue further commitments of contract funds to the extent they relate to the terminated portion of the Agreement; (2) promptly cancel all Agreements and/or orders to subcontractors utilizing funds under this Agreement; (3) submit, within a reasonable period of time to be specified by WICHITA, a cancellation settlement proposal which shall include a final statement for the Agreement, or reimbursement of unearned funds previously distributed.

17. **Appendices.** All exhibits referenced below and all amendments or mutually agreed upon modification(s) made by both parties are hereby incorporated as though fully set forth herein. In case of conflict in terms between this Agreement and Exhibit C, the terms of Exhibit C shall take precedence.

Exhibit A	Nondiscrimination and Equal Employment Opportunity Statement
Exhibit B	Scope of Services and Method of Payment
Exhibit C	Fiscal Year 2011 Certifications and Assurances for FTA Assistance Programs *
Exhibit D	FTA 2011 Master Agreement as of October 1, 2010 *

* As newer versions of Certifications and Assurances and the Master Agreement are available they will be provided to CPRF by request

IN WITNESS WHEREOF, the parties have set their hands the day and year first above written.

BOARD OF DIRECTORS of THE CEREBRAL PALSY FOUNDATION of KS, Inc. (CPRF)

Patrick T. Jonas, President/CEO

CITY OF WICHITA, KANSAS
By order of the City Council

Carl Brewer, Mayor

APPROVED AS TO FORM:

Gary E. Rebenstorf, Director of Law

ATTEST:

Susan Robinson, Director of Transportation

ATTEST:

Karen Sublett, City Clerk

Exhibit A
Nondiscrimination and Equal Employment Opportunity Statement

During the term of this Agreement, the contractor or subcontractor, vendor, or supplier of the City, by whatever term identified herein, shall comply with the following Nondiscrimination—Equal Employment Opportunity/Affirmative Action Program Requirements:

A. During the performance of this Agreement, the contractor, subcontractor, vendor, or supplier of the City, or any of its agencies, shall comply with all provisions of the Civil Rights Act of 1964, as amended: The Equal Employment Opportunity Act of 1972; Presidential Executive Orders 11246, 11375, 11131; Part 60 of Title 41 of the Code of Federal Regulations; the Age Discrimination in Employment Act of 1967; the Americans with Disabilities Act of 1990 and laws, regulations or amendments as may promulgated thereunder.

B. Requirements of the State of Kansas:

1. The contractor shall observe the provisions of the Kansas Act against Discrimination (Kansas Statutes Annotated 44-1001, et seq.) and shall not discriminate against any person in the performance of work under the present Agreement because of race, religion, color, sex, disability, and age except where age is a bona fide occupational qualification, national origin, or ancestry;

2. In all solicitations or advertisements for employees, the contractor shall include the phrase, "Equal Opportunity Employer" or a similar phrase to be approved by the "Kansas Human Rights Commission";

3. If the contractor fails to comply with the manner in which the contractor reports to the "Kansas Human Rights Commission" in accordance with the provisions of K.S.A. 1976 Supp. 44-1031, as amended, the contractor shall be deemed o have breached this Agreement and it may be canceled, terminated, or suspended in whole or in part by the contracting agency;

4. If the contractor is found guilty of a violation of the Kansas Act against Discrimination under a decision or order of the "Kansas Human Rights Commission" which has become final, the contractor shall be deemed to have breached the present Agreement, and it may be canceled, terminated, or suspended in whole or in part by the contracting agency; and

5. The contractor shall include the provisions of Paragraph 1 through 4, inclusive, of this Subsection B in every subcontract or purchase so that such provisions will be binding upon such subcontractor or vendor.

C. Requirements of the City of Wichita, Kansas, relating to Nondiscrimination – Equal Employment Opportunity/Affirmative Action Program Requirements:

1. The vendor, supplier, contractor or subcontractor shall practice nondiscrimination – equal employment opportunity in all employment relations, including, but not limited to, employment, upgrading, demotion or transfer, recruitment or recruitment advertising, layoff or termination, rates of pay or other forms of compensation, and selection for training, including apprenticeship.

The vendor, supplier, contractor, or subcontractor shall submit and Equal Employment Opportunity or Affirmative Action Program, when required, to the Department of Finance of the City of Wichita, Kansas, in accordance with the guidelines established for review and evaluation;

2. The vendor, supplier, contractor, or subcontractor will, in all solicitations or advertisements for employees placed by or on the behalf of the vendor, supplier, contractor, or subcontractor, state that all qualified applicants will receive consideration for employment without regard to race, religion, color, sex, "disability, and age except where age is a bona fide occupational qualification", national origin, or ancestry. In all solicitations or advertisements for employees the vendor, supplier, contractor, or subcontractor shall include the phrase, "Equal Opportunity Employer" or similar phrase;

3. The vendor, supplier, contractor, or subcontractor will furnish all information and reports required by the Department of Finance of said City for the purpose of investigation to ascertain compliance with nondiscrimination – equal employment opportunity requirements. If the vendor, supplier, contractor, or subcontractor fails to comply with the manner in which he/she or it reports to the City in accordance with the provisions hereof, the vendor, supplier, contractor, or subcontractor shall be deemed to have breached the present contract, purchase order, or Agreement and it may be canceled, terminated, or suspended in whole or in part by the City or its agency, and further civil rights complaints or investigations may be referred to the State;

4. The vendor, supplier, contractor, or subcontractor shall include the provisions of Subsection 1 through 3, inclusive, of this present section in every subcontract, sub-purchase order, or sub-Agreement so that such provisions will be binding upon each subcontractor, sub-vendor, or sub-supplier; and

5. If the contractor fails to comply with the manner in which the contractor reports to the Department of Finance as stated above, the contractor shall be deemed to have breached this Agreement, and it may be canceled, terminated, or suspended in whole or in part by the contracting agency;

D. Exempted from these requirements are:

1. Those contractors, subcontractors, vendors or suppliers who have less than four (4) employees, whose contracts, purchase orders or Agreements cumulatively total less than five thousand dollars ($5,000) during the fiscal year of said City are exempt from any further Equal Employment Opportunity or Affirmative Action Program submittal.

2. Those vendors, suppliers, contractors, or subcontractors who have already complied with the provisions set forth in this section by reason of holding a contract with the federal government or contract involving federal funds; provided that such contractor, subcontractor, vendor, or supplier provides written notification of a compliance review and determination of an acceptable compliance posture within a preceding forty-five (45) day period from the federal agency involved.

Exhibit B
Scope of Services and Method of Payment

CPRF will provide dialysis rides outside the Wichita City limits in support of general public transportation services in the urbanized area under federal guidelines.

The amount of funds anticipated from the Federal Transit Administration Section 5307 grant in FY2012 is $120,000.00. The total allocation for operating functions for CPRF's transportation system for FY2012 is **$150,000**. The federal portion is **$120,000**, and CPRF's portion is **$30,000** for the required 20% local match. As the designated recipient of federal funds, the WICHITA will disperse the available federal funds that are appropriately matched under the terms of the grant.

CPRF will submit an invoice for payment no later than 30 days monthly. WICHITA will reimburse CPRF for the invoiced amount no later than 30 days after the invoice is received. A line item list of expenses must be attached to the invoice for WICHITA to examine and determine if all expenses are FTA eligible. Any ineligible costs will be rejected by WICHITA and CPRF must submit a revised invoice.

Exhibit C
Fiscal Year 2011 Certifications and Assurances for FTA Assistance Programs

The 2011 Certifications and Assurances will be on file for review at Wichita Transit, 777 E. Waterman as of January 1, 2011.

Exhibit D
FTA 2011 Master Agreement

The 2011 FTA Master Agreement as of October 1, 2011 can be found at the following website:

http://www.fta.dot.gov/documents/17-Master.pdf

City of Wichita
City Council Meeting
September 13, 2011

TO: Mayor and City Council

SUBJECT: 47th Street South Improvement, between Lulu and Hydraulic (District III)

INITIATED BY: Department of Public Works & Utilities

AGENDA: Consent

Recommendation: Approve the revised budget.

Background: On November 17, 2009, the City Council approved a project to improve 47th Street South, between Lulu and Hydraulic. The project is funded in part by the American Recovery and Reinvestment Act (ARRA) of 2009 de-obligated funding. The project is nearing completion. It connects at the west end to a State funded and administered project to reconstruct the I-135/KTA/47th Street South interchange. Construction phasing coordination with the two projects is extremely complex and has extended the construction time frame for the City's 47th Street project by an additional nine months. As a result, the current estimated project cost is higher than expected.

Analysis: The proposed project reconstructs 47th Street South between Lulu and the west line of Hydraulic to provide a five lane roadway with four through lanes and a center two-way left turn lane. This matches the roadway geometrics currently being constructed between Lulu and Broadway. Drainage improvements are included with the project. New sidewalk is constructed on both sides of 47th Street and the available right-of-way is being landscaped.

Financial Considerations: The approved budget is $900,000 with $250,000 funded by City General Obligation (GO) Bonds and $650,000 by ARRA funds. It is proposed that the budget be increased to $950,000 and the GO bond share increased to $300,000. It is proposed that the additional $50,000 in GO funding come from available funds in the Harry, Greenwich to 127th Street project. The Council is asked to waive the "Use of Project Savings" policy that was approved with the Adopted 2009-2018 Capital Improvement Program to allow this to happen.

Goal Impact: This project addresses the Efficient Infrastructure goal by improving traffic flow through a major transportation corridor.

Legal Considerations: The Law Department has approved the amending ordinance as to legal form.

Recommendation/Action: It is recommended that the City Council approve the waiver of the Use of Project Savings Policy, approve the revised budget, place the amending ordinance on first reading and authorize the signing of State/Federal Agreements as required.

Attachments: CIP sheet and amending ordinance.

CAPITAL IMPROVEMENT

PROJECT AUTHORIZATION

CITY OF WICHITA

USE
To Initiate Project
To Revise Project X

1. Prepare in triplicate
2. Send original & 2 copies to budget
3. City Manager to sign all copies.
4. File original w/ initiating resolution in City Clerk.
5. Return 2nd copy to initiating department
6. Send 3rd copy to Controller.

1. Initiating Department	2. Initiating Division	3. Date	4. Project Description & Location
Public Works & Utilities	Eng & Arch	8/23/2011	47th St. South, Lulu-Hydraulic

5. CIP Project Number	6. Accounting Number	7. CIP Project Date (Year)	8. Approved by WCC Date
MS-		2011	

9. Estimated Start Date:	10. Estimated Completion Date:	11. Project Revised
As Required	As Required	

12. Project Cost Estimate:

ITEM	GO	SA	ARRA	TOTAL
Right of Way				
Bridge & Culverts				
Paving, grading, & const.	$300,000		$650,000	$950,000
Drainage				
Sanitary Sewer				
Sidewalk				
Water				
Multi-Use Path				
Totals	$300,000		$650,000	$950,000
Total CIP Amount Budgeted				
Total Prelim. Estimate				

12A.

	Yes	No
Platting Required		
Lot Split		
Petition		
Ordered by WCC	X	

Remarks:

472-84872

13. Recommendation: Approve the revised budget and place the amending ordinance on 1st reading

Division Head	Department Head	Budget Officer	City Manager
		Date	Date

132019

Published in the Wichita Eagle on September 23, 2011

ORDINANCE NO. 49-087

AN ORDINANCE AMENDING ORDINANCE NO. 48-559 OF THE CITY OF WICHITA, KANSAS DECLARING 47TH STREET SOUTH, BETWEEN HYDRAULIC AND LULU (472-84872) TO BE A MAIN TRAFFICWAY WITHIN THE CITY OF WICHITA KANSAS; DECLARING THE NECESSITY OF AND AUTHORIZING CERTAIN IMPROVEMENTS TO SAID MAIN TRAFFICWAY; AND SETTING FORTH THE NATURE OF SAID IMPROVEMENTS THE ESTIMATED COSTS THEREOF, AND THE MANNER OF PAYMENT OF THE SAME.

BE IT ORDAINED BY THE GOVERNING BODY OF THE CITY OF WICHITA, KANSAS;

SECTION 1. Section 3 of Ordinance No. 48-559 is hereby amended to read as follows:

"SECTION 3. The cost of the above described improvements is estimated to be Nine Hundred Fifty Thousand Dollars ($950,000) exclusive of the cost of interest on borrowed money. To the extent the cost of such improvements is not paid by Federal Grants administered by the Kansas Department of Transportation, the City of Wichita, Kansas is authorized to issue general obligation bonds to pay such costs under the authority of K.S.A. 12-689 up to a maximum amount of $950,000, exclusive of the cost of interest on borrowed money."

SECTION 2. The original SECTION 3 of Ordinance No. 48-559 is hereby repealed.

SECTION 3. That the City Clerk shall make proper publication of this ordinance, which shall be published once in the official City paper and which shall be effective from and after said publication.

PASSED by the governing body of the City of Wichita, Kansas, this 20th day of September, 2011.

_____
Carl Brewer, Mayor

ATTEST:

_____
Karen Sublett, City Clerk

(SEAL)

APPROVED AS TO FORM:

_____
Gary E. Rebenstorf, Director of Law

Agenda Item No. II-20

City of Wichita
City Council Meeting
September 13, 2011

TO: Mayor and City Council

SUBJECT: Kellogg, between Cypress and 159th Street East (District II)

INITIATED BY: Department of Public Works & Utilities

AGENDA: Consent

Recommendations: Adopt the amending ordinance.

Background: A review of the ordinances for the City's upcoming issuance of bonds for local sales tax projects has identified a minor, technical error that should be corrected. It consists of an incorrect reference to the previous ordinance. An amending ordinance has been prepared to correct the error.

Analysis: The affected ordinance is for design and right-of-way acquisition costs for the Kellogg improvement, between Cypress and 159th Street East.

Financial Considerations: The approved project budget is unaffected.

Goal Impact: This project addresses the Efficient Infrastructure goal by supporting the improvement of east Kellogg to a freeway.

Legal Considerations: The amending ordinance has been approved as to form by the Law Department.

Recommendation/Actions: It is recommended that the City Council find and declare, upon the request of the Mayor, that a public emergency exists, requiring the final passage of the amending ordinance on the date of its introduction, adopt the amending ordinance and authorize the necessary signatures.

Attachments: Amending ordinance and declaration of emergency.

132019

Published in the Wichita Eagle on September 16, 2011

ORDINANCE NO. 49-076

AN ORDINANCE AMENDING ORDINANCE NO. 48-944 OF THE CITY OF WICHITA, KANSAS DECLARING KELLOGG, BETWEEN CYPRESS AND 159TH ST. EAST (472-84634) TO BE A MAIN TRAFFICWAY WITHIN THE CITY OF WICHITA KANSAS; DECLARING THE NECESSITY OF AND AUTHORIZING CERTAIN IMPROVEMENTS TO SAID MAIN TRAFFICWAY; AND SETTING FORTH THE NATURE OF SAID IMPROVEMENTS THE ESTIMATED COSTS THEREOF, AND THE MANNER OF PAYMENT OF THE SAME.

BE IT ORDAINED BY THE GOVERNING BODY OF THE CITY OF WICHITA, KANSAS;

SECTION 1. That Section 1 of Ordinance No. 48-944 is hereby amended to read as follows:

"SECTION 1. Section 3 or Ordinance No. 47-708 is hereby amended to read as follows:

"SECTION 3. The costs of the above described improvements is estimated to be Twenty-Five Million Five Hundred Thousand Dollars ($25,500,000) exclusive of the cost of interest on borrowed money with the total paid by Local Sales Tax funds. Said City share, when ascertained, shall be borne by the City of Wichita at large by the issuance of General Obligation bonds under the authority of K.S.A. 12-689."

SECTION 2. The original of SECTION 1 of Ordinance No. 48-944 is hereby repealed.

SECTION 3. That the City Clerk shall make proper publication of this ordinance, which shall be published once in the official city paper and which shall be effective from and after said publication. PASSED by the governing body of the City of Wichita, Kansas, this 13th day of September, 2011.

_____
Carl Brewer, Mayor

ATTEST:

_____
Karen Sublett, City Clerk

(SEAL)

APPROVED AS TO FORM:

_____
Gary E. Rebenstorf, Director of Law

REQUEST FOR DECLARATION OF EMERGENCY

REQUEST OF THE MAYOR OF THE CITY OF WICHITA, KANSAS, FOR THIS DECLARATION BY THE CITY COUNCIL OF SAID CITY OF THE EXISTENCE OF A PUBLIC EMERGENCY REQUIRING THE FINAL ADOPTION OF AN ORDINANCE AS DESIGNATED BELOW.

I, CARL BREWER, Mayor of the City of Wichita, Kansas, hereby request that the City Council declare that a public emergency exists requiring the final adoption and passage on the date of its introduction, to-wit, September 13, 2011, of an ordinance entitled:

AN ORDINANCE AMENDING ORDINANCE NO. **48-944** OF THE CITY OF WICHITA, KANSAS DECLARING **KELLOGG, BETWEEN CYPRESS AND 159TH ST. EAST (472-84634)** TO BE A MAIN TRAFFICWAY WITHIN THE CITY OF WICHITA KANSAS; DECLARING THE NECESSITY OF AND AUTHORIZING CERTAIN IMPROVEMENTS TO SAID MAIN TRAFFICWAY; AND SETTING FORTH THE NATURE OF SAID IMPROVEMENTS THE ESTIMATED COSTS THEREOF, AND THE MANNER OF PAYMENT OF THE SAME.

The general nature of such emergency is to enable the City for transcript approval prior to closing Local Sales Tax General Obligation Bonds, Series 2011A bond sale on October 6, 2011.

It is, therefore, expedient at this time that the City Council find and declare that a public emergency exists by reason of the foregoing, and that the above entitled Ordinance be finally adopted on the date of its introduction.

EXECUTED at Wichita, Kansas, on this _____ day of _____, 2011.

_____
CARL BREWER, MAYOR

(SEAL)

ATTEST:

_____
KAREN SUBLETT, CITY CLERK

City of Wichita
City Council Meeting
September 13, 2011

TO: Mayor and City Council

SUBJECT: Hawker Beechcraft and Wichita Radio Control Club donation of Chapin Park Remote Controlled Flying Field Improvements (District III)

INITIATED BY: Department of Park and Recreation

AGENDA: Consent

Recommendation: Accept the donation, approve the Memorandum of Understanding and authorize the necessary signatures.

Background: In 1995 the Wichita Radio Control Club (WRCC) was given permission to fly radio control aircraft at the closed Chapin Landfill site, located at 2400 E. MacArthur Road. The club created and maintained a grass landing area and installed a small shelter for member use. On October 21, 2008, the City Council approved Phase I Chapin Park Improvements, which were completed in January 2010. Phase I turned the closed landfill into a public park by constructing a new entrance road from MacArthur, parking improvements, dog park, outdoor shelters and picnic areas, mountain biking trails, and walking paths. A paved connecting road and parking lot were constructed for the WRCC site.

Recently the Hawker Beechcraft Radio Control Field was closed when the land was sold for development. A part of the sale involved the relocation of the paved Hawker Beechcraft landing strip and pilot shelters. Hawker Beechcraft, WRCC and the Webb and 13th Real Estate LLC have been working with the Park and Recreation Department to reconstruct the asphalt runway and shelters at Chapin Park. On May 16, 2011, the Board of Park Commissioners reviewed the proposed improvements and approved pursuing the donation.

Analysis: The Webb and 13th Real Estate LLC, on behalf of the Hawker Beechcraft Corporation wishes to donate a 20' X 400' asphalt runway and three pilot shelters to the City, which will be constructed at Chapin Park. Additionally the WRCC would like to donate additional funds to widen the runway to 30'. If accepted, it is anticipated that the improvements would be constructed this fall.

Financial Considerations: The Webb and 13th Real Estate LLC and WRCC will provide the funds for these improvements per the Memorandum of Understanding. No City funds will be used for these improvements.

Goal Impact: The park improvements and renovation will enhance Quality of Life for the community and support a Vibrant Neighborhood.

Legal Considerations: The Law Department has approved the Memorandum of Understanding as to form.

Recommendation/Action: It is recommended that the City Council accept the donation, approve the Memorandum of Understanding and authorize all necessary signatures.

Attachment: Memorandum of Understanding.

MEMORANDUM OF UNDERSTANDING

THIS AGREEMENT made this_____day of _____, 2011, BY AND BETWEEN

City of Wichita Department of Parks and Recreation
(Parks)

AND

Hawker Beechcraft Corporation and Wichita Radio Control Club (WRCC)

WITNESSETH:

Whereas WRCC has worked with Parks to maintain and improve the Chapin Park Remote-Controlled Air Field (RCAF); and

Whereas Hawker Beechcraft Corporation is working with Parks to further improve said RCAF; and

Whereas Webb & 13th Real Estate LLC on behalf of Hawker Beechcraft Corporation wishes to donate in kind an asphalt runway (20' X 400') and (3) Pilot Shelters to improve said RCAF; and

Whereas the WRCC and donors wishes to donate in escrow cash of up to $10,000.00 to allow the asphalt runway to be widen an additional 10' (total runway size to be 30' X 400'). (Any residual money to be returned to the donors accordingly.); and

Whereas on _____ the City Council of the City of Wichita took action to accept said donation;

NOW THEREFORE, the parties do hereby agree as follows:

1. Webb & 13th Real Estate LLC agrees to construct the following improvements: an asphalt runway and (3) Pilot Shelters.

2. WRCC and donors agrees to provide up to $10,000.00 to allow the runway to be widen 10'.

3. Parks agrees to accept said improvements and provide necessary maintenance.

4. WRCC further agrees to provide volunteer support, funding and/or manpower for long-term maintenance.

IN WITNESS WHEREOF, the parties hereto have caused these presents to be executed in their names the day and year first above written.

WITNESS OUR HANDS AND SEALS the day and year first above written.

City of Wichita Department of Parks and Recreation

Douglas Kupper, Director

For Doug Kupper

Randy Blad, Manager – Real Estate
Hawker Beechcraft Corporation

Webb & 13th Real Estate LLC
Murfin Inc., Member
Robert D. Young, President

Marvin Blankenship, President WRCC

Approved as to Form:

Gary E. Rebenstorf, Director of Law

By Order of the City Council:

_____ _____
Carl Brewer Date
Mayor

Attest:_____
City Clerk

City of Wichita
City Council Meeting
September 13, 2011

TO: Mayor and City Council

SUBJECT: Notice of Intent to Use Debt Financing
1980 Airport Road Roof Replacement
Wichita Mid-Continent Airport

INITIATED BY: Department of Airports

AGENDA: Consent

Recommendation: Adopt the Resolution.

Background: The Airport Authority relies on the City of Wichita for the issuance of General Obligation bonds and/or notes for capital projects. In order to use debt financing for a project, it is necessary to declare that a public necessity exists for, and that the public safety, service, and welfare will be advanced by, the authorization of certain capital improvements to the Mid-Continent Airport facility. Additionally, the nature of said improvements, the estimated costs thereof, and the manner of payment, needs to be disclosed. The actual issuance of the bonds/notes will require a separate authorization from the City Council. Debt financing can be in the form of temporary notes for durations as short as six months for timing considerations, or in the form of General Obligation bonds for long term financing.

Analysis: In a concurrent agenda item, the City Council, sitting as the Wichita Airport Authority, will take action on a request to establish a capital budget for a roof replacement project at 1980 Airport Road. It is appropriate to make notice of the intent to use debt financing for this project with the specific financing amount and length being identified when the actual issuance of the bonds/notes are authorized in the future by the City Council.

Financial Considerations: The requested budget for the project is $291,000, which represents the maximum cost that will be financed with General Obligation bonds/notes. If the debt is issued, the source of repayment for the bonds/notes will be Airport revenues.

Goal Impact: The Airport's contribution to the Economic Vitality of Wichita is leveraged through the use of financing for capital projects.

Legal Considerations: The Law Department has approved the Authorizing Resolution as to form.

Recommendation/Action: It is recommended that the City Council adopt the Resolution and authorize the necessary signatures.

Attachments: Authorizing Resolution.

OCA = 500496; UC1 = 1005
(Published in the Wichita Eagle on September 16th and September 23rd, 2011)

RESOLUTION NO. A11-221

A RESOLUTION DECLARING THAT A PUBLIC NECESSITY EXISTS FOR, AND THAT THE PUBLIC SAFETY, SERVICE AND WELFARE WILL BE ADVANCED BY, THE AUTHORIZATION OF LAND ACQUISITION AND/OR CERTAIN CAPITAL IMPROVEMENTS TO THE WICHITA MID-CONTINENT AIRPORT FACILITY; AND SETTING FORTH THE NATURE OF SAID IMPROVEMENTS; THE ESTIMATED COSTS THEREOF; AND THE MANNER OF PAYMENT OF SAME.

WHEREAS, K.S.A. 3-114 provides that an airport authority established pursuant to K.S.A. 3-162 shall have the power to equip, improve and maintain an airport; and,

WHEREAS, K.S.A. l3-1348a provides that a city having an airport authority established pursuant to K.S.A. 3-162 is authorized to issue general obligation bonds for the purpose of purchasing land for airport purchases or for the construction, enlargement, reconstruction, repair or addition to or of any improvements to any such lands.

THEREFORE, BE IT RESOLVED BY THE GOVERNING BODY OF THE CITY OF WICHITA, KANSAS:

SECTION 1. That a public necessity exists for, and that the public safety, service and welfare will be advanced by, the authorization of land acquisition and/or certain capital improvements, specifically,

1980 Airport Road Roof Replacement

to the Wichita Mid-Continent Airport facility operated by the Wichita Airport Authority of the City of Wichita, Kansas (such land acquisition and/or improvement to be referred to herein as the "Project").

SECTION 2. That the cost of the above described Project is estimated to be Two Hundred and Ninety One Thousand Dollars ($291,000), exclusive of the cost of interest on borrowed money, to be paid by the Wichita Airport Authority of the City of Wichita. Said Wichita Airport Authority cost shall be financed through the issuance of general obligation bonds under the authority of K.S.A. l3-1348a, as amended by Charter Ordinance No. 78 of the City of Wichita, Kansas. The maximum principal amount of bonds issued for this Project shall not exceed $291,000.

SECTION 3. That to the extent the Project is a capital improvement, the above described Project shall be made in accordance with the Plans and Specifications prepared under the direction of the Airport Engineering and Planning Manager and approved by the Wichita Airport Authority. Said plans and specifications are to be placed on file in the office of the Airport Engineering and Planning Manager located at Wichita Mid-Continent Airport.

OCA = 500496; UC1 = 1005

SECTION 4. That the City Clerk shall make proper publication of this resolution, which shall be published once each week for two consecutive weeks in the official City paper and which shall be effective from and after said publication.

ADOPTED at Wichita, Kansas, September 13, 2011.

_____
CARL BREWER, MAYOR

ATTEST:

_____
KAREN SUBLETT, CITY CLERK

(SEAL)

APPROVED AS TO FORM:

_____
GARY REBENSTORF, DIRECTOR OF LAW

Second Reading Ordinances for September 13, 2011 (first read on August 23, 2011)

2011 Biennial Bridge Inspections.

ORDINANCE NO. 49-072

An ordinance of the City of Wichita, Kansas authorizing the issuance of its General Obligation bonds to pay the costs of a city-wide structural inventory and appraisal of 293 bridges (472-85006); and authorizing and providing for the issuance of temporary improvement notes of the city from time to time as funds are needed for such purpose.

Diesel Emissions Reductions Grant.

ORDINANCE NO. 49-073

An ordinance determining the necessity for acquiring fleet vehicles and equipment, and providing that the cost of said acquisition shall be paid by the city of Wichita, Kansas, at large through the issuance of General Obligation Bonds of the City of Wichita, Kansas, under the city's home rule authority as set out in Article 12, Section 5, of the Constitution of the State of Kansas.

ZON2011-00020 – City zone change from OW Office-Warehouse ("OW") to General Commercial ("GC") with Protective Overlay ("P-O") #255; generally located east of Rock Road, on the northwest side of Pawnee Avenue and Oak Knoll Street. (District II)

ORDINANCE NO. 49-074

An ordinance changing the zoning classifications or districts of certain lands located in the city of Wichita, Kansas, under the authority granted by the Wichita-Sedgwick County Unified Zoning Code, Section V-C, as adopted by Section 28.04.010, as amended.

DR2011-04: Downtown Rezoning Proposal (Districts IV and VI)

ORDINANCE NO. 49-075

An ordinance changing the zoning classifications or districts of certain lands located in the city of Wichita, Kansas, under the authority granted by the Wichita-Sedgwick County Unified Zoning Code, Section V-C, as adopted by Section 28.04.010, as amended.

Agenda Item No. II-24

City of Wichita
City Council Meeting
September 13, 2011

TO: Mayor and City Council

SUBJECT: ZON2011-00023 – City zone change from SF-5 Single-Family Residential to TF-3 Two-Family Residential; generally located south of Maple Street, on the west side of Sheridan Avenue and north of University Avenue. (District IV)

INITIATED BY: Metropolitan Area Planning Department

AGENDA: Planning (Consent)

MAPC Recommendation: Approve unanimously (10-0).

DAB IV recommendation: Approve unanimously (7-0).

MAPD Staff Recommendation: Approve.

Background: The applicant requests a zone change from SF-5 Single-Family Residential ("SF-5") to TF-3 Two-Family Residential ("TF-3") on Lots 41, 43 and 45, Block 2, the College Green Addition. The site has a duplex on it and the zone change is needed to make the use conform to the Unified Zoning Code (UZC). The City's Geozone shows a residence on the site to have been built in 1920; it is not known when it was converted into a duplex.

The area around the site is developed as mostly single-family residential with scattered duplexes, all zoned SF-5 and TF-3. There is also a B Multi-Family Residential ("B") zoned single-family residence and vacant land and a MF-29 Multi-Family Residential ("MF-29") zoned four-plex in the area. West of the site, across a platted alley, Lots 46, 48, and 50, Block 2, College Green Addition were rezoned from SF-5 to TF-3, by ZON2010-41; this property now has a duplex on it. A block north of the site, across Maple Street, the SF-5 zoned Mayberry Middle Magnet School – Lawrence Elementary – West Douglas Public Park complex is the largest development in the area. Maple Street has uninterrupted LC Limited Commercial ("LC"), GC General Commercial ("GC") and LI Limited Industrial ("LI") zoning from Sheridan to West Street, with the exception of the already noted school – park development. The nonresidential zoned development along Maple includes self-storage warehouses, a bar, office – warehouses, strip retail, strip office, vehicle repair, small apartments, a vet clinic, vacant land, park land and a Quick Trip convenience store.

Analysis: At the District Advisory Board IV (DAB IV) meeting held August 1, 2011, the DAB voted (7-0) to approve the request. At the MAPC meeting held August 4, 2011, the MAPC voted (10-0) to approve the request. No one spoke in opposition to this request at the DAB IV meeting or the MAPC's advertised public hearing meeting. No written protests have been filed.

Financial Considerations: All improvements will be to City standards and at the applicant's expense.

Goal Impact: The application supports the City's goal to promote Economic Vitality.

Legal Considerations: The ordinance has been reviewed and approved as to form by the Law Department.

Recommendation/Actions:

1. Adopt the findings of the MAPC and approve the zone change, authorize the Mayor to sign the ordinance and place the ordinance on first reading (simple majority required).

Attachments:

- Ordinance
- MAPC Minutes
- DAB IV Minutes

OCA 150004

ORDINANCE NO. 49-088

AN ORDINANCE CHANGING THE ZONING CLASSIFICATIONS OR DISTRICTS OF CERTAIN LANDS LOCATED IN THE CITY OF WICHITA, KANSAS, UNDER THE AUTHORITY GRANTED BY THE WICHITA-SEDGWICK COUNTY UNIFIED ZONING CODE, SECTION V-C, AS ADOPTED BY SECTION 28.04.010, AS AMENDED.

BE IT ORDAINED BY THE GOVERNING BODY
OF THE CITY OF WICHITA, KANSAS.

SECTION 1. That having received a recommendation from the Planning Commission, and proper notice having been given and hearing held as provided by law and under authority and subject to the provisions of The Wichita-Sedgwick County Unified Zoning Code, Section V-C, as adopted by Section 28.04.010, as amended, the zoning classification or districts of the lands legally described hereby are changed as follows:

Case No. ZON2011-00023

Zone change from SF-5 Single-Family Residential ("SF-5") to TF-3 Two-Family Residential ("TF-3") on an approximately 10,500-square foot property described as:

Lots 41, 43 and 45, Block 2, College Green Addition; generally located south of Maple Street, on the west side of Sheridan Avenue and north of University Avenue, Wichita Sedgwick County, Kansas.

SECTION 2. That upon the taking effect of this ordinance, the above zoning changes shall be entered and shown on the "Official Zoning Map" previously adopted by reference, and said official zoning map is hereby reincorporated as a part of the Wichita -Sedgwick County Unified Zoning Code as amended.

SECTION 3. That this Ordinance shall take effect and be in force from and after its adoption and publication in the official City paper.

_____
Carl Brewer - Mayor

ATTEST:

_____
Karen Sublett, City Clerk

(SEAL)

Approved as to form: _____
Gary E. Rebenstorf, City Attorney

EXCERPT OF THE AUGUST 4, 2011 WICHITA-SEDGWICK COUNTY METROPOLITAN AREA PLANNING COMMISSION HEARING

Case No.: ZON2011-23 - James Melton and Jonathan Staab (owner) and Rick Jester and McCurdy Auction (applicant/agent) requests a City zone change from SF-5 Single-Family Residential to TF-3 Two-Family Residential on property described as:

Lots 41, 43 and 45, Block 2, College Green, Sedgwick County, Kansas.

BACKGROUND: The applicant requests a zone change from SF-5 Single-Family Residential ("SF-5") to TF-3 Two-Family Residential ("TF-3") on Lots 41, 43 and 45, Block 2, College Green Addition. The site has a duplex on it and the zone change is needed to make the use conform to the Unified Zoning Code (UZC). Geozone shows a residence on the site to have been built in 1920; it is not known when it was converted into a duplex.

The area around the site is developed as mostly single-family residential with scattered duplexes, all zoned SF-5 and TF-3. There is also a B Multi-Family Residential ("B") zoned single-family residence and vacant land and a MF-29 Multi-Family Residential ("MF-29") zoned four-plex in the area. West of the site, across a platted alley, Lots 46, 48, and 50, Block 2, College Green Addition were rezoned from SF-5 to TF-3, by ZON2010-41; this property now has a duplex on it. A block north of the site, across Maple Street, the SF-5 zoned Mayberry Middle Magnet School – Lawrence Elementary – West Douglas Public Park complex is the largest development in the area. Maple Street has uninterrupted LC Limited Commercial ("LC"), GC General Commercial ("GC") and LI Limited Industrial ("LI") zoning from Sheridan to West Street, with the exception of the already noted school – park development. The nonresidential zoned development along Maple includes self-storage warehouses, a bar, office – warehouses, strip retail, strip office, vehicle repair, small apartments, a vet clinic, vacant land, park land and a Quick Trip convenience store.

CASE HISTORY: The College Green Addition was recorded with the Sedgwick County Register of Deeds March 7, 1887.

ADJACENT ZONING AND LAND USE:

NORTH:	SF-5, LC	Single-family residences, vehicle repair, office – warehouse, public schools, Public Park
SOUTH:	SF-5	Single-family residences
EAST:	SF-5, TF-3, MF-29	Single-family residences, duplexes, four-plex
WEST:	SF-5, TF-3, GC, B	Single-family residences, duplexes, vacant lands

PUBLIC SERVICES: The subject site is located on Sheridan Avenue, a paved, two-lane residential collector street. The 2030 Transportation Plan shows no change to this portion of Sheridan. Public water, sewer service and all other utilities are available to serve the site.

CONFORMANCE TO PLANS/POLICIES: The 2030 Wichita Functional Land Use Guide of the Comprehensive Plan (2030 Plan) designates this area as appropriate for "Urban Residential" development. The Urban Residential category includes all housing types found in the municipality, including duplexes. The Comprehensive Plan contains the following objective: encourage residential redevelopment, infill and higher density residential development, which maximize the public investment in existing and planned facilities and services. The objective is intended to be achieved through several strategies, including using zoning as a tool to promote mixed-use development, higher density residential environments, and appropriate buffering. The proposed TF-3 zoning brings an already built duplex into compliance with the UZC. There are existing TF-3 zoned duplexes in the area, therefore the proposed TF-3 zoning does not introduce TF-3 zoning into the area. The requested TF-3 zoning conforms to the 2030 Plan and is not out of character with the zoning in this area.

RECOMMENDATION: Based upon information available prior to the public hearings, planning staff recommends that the request be APPROVED.

This recommendation is based on the following findings:

1. The zoning, uses and character of the neighborhood: The area around the site is developed as mostly single-family residential with scattered duplexes, all zoned SF-5 and TF-3. There is also a B Multi-Family Residential ("B") zoned single-family residence and vacant land and a MF-29 Multi-Family Residential ("MF-29") zoned four-plex in the area. West of the site, across a platted alley, Lots 46, 48 and 50, Block 2, College Green Addition were rezoned from SF-5 to TF-3, by ZON2010-41; this property now has a duplex on it. A block north of the site, across Maple Street, the SF-5 zoned Mayberry Middle Magnet School – Lawrence Elementary – West Douglas Public Park complex is the largest development in the area. Maple Street has uninterrupted LC Limited Commercial ("LC"), GC General Commercial ("GC") and LI Limited Industrial ("LI") zoning from Sheridan to West Street, with the exception of the already noted school – park development. The nonresidential zoned development along Maple includes self-storage warehouses, a bar, office – warehouses, strip retail, strip office, vehicle repair, small apartments, a vet clinic, vacant land, park land and a Quick Trip convenience store.

2. The suitability of the subject property for the uses to which it has been restricted: The site has a duplex on it and the zone change is needed to make the use conform to the UZC. Geozone shows a residence on the site to have been built in 1920; it is not known when it was converted into a duplex. The zoning change can be granted or the duplex could be converted into a single-family residence.

3. Extent to which removal of the restrictions will detrimentally affect nearby property: Typical concerns expressed by neighbors in regards to duplex development is declining property values of the neighborhood brought on by poor maintenance of what is typically rental housing, i.e., the duplexes. Poor maintenance of rental property is not an absolute, nor is there any guarantee that a single-family residence will be maintained by its owner.

4. Conformance of the requested change to the adopted or recognized Comprehensive Plan and policies: The 2030 Wichita Functional Land Use Guide of the Comprehensive Plan designates this area as appropriate for "Urban Residential" development. The Urban Residential category includes all housing types found in the municipality, including duplexes. The Comprehensive Plan contains the following objective: encourage residential redevelopment, infill and higher density residential development, which maximize the public investment in existing and planned facilities and services. The objective is intended to be achieved through several strategies, including using zoning as a tool to promote mixed-use development, higher density residential environments, and appropriate buffering. The proposed TF-3 zoning brings an already built duplex into compliance with the UZC. There are existing TF-3 zoned duplexes in the area, therefore the proposed TF-3 zoning does not introduce TF-3 zoning into the area. The requested TF-3 zoning conforms to the 2030 Plan and is not out of character with the zoning in this area.

5. Impact of the proposed development on community facilities: The impact on community facilities will be minimal.

BILL LONGNECKER, Planning Staff presented the Staff Report.

MOTION: To approve subject to staff recommendation.

KLAUSMEYER moved, **DENNIS** seconded the motion, and it carried (10-0).

CITY OF WICHITA

INTEROFFICE MEMORANDUM

TO: Wichita City Council

MAPC Members

FROM: Kelli Glassman, Neighborhood Assistant, District IV

SUBJECT: ZON2011-00023

DATE: August 3, 2011

On Monday, August 1, 2011, the *District Advisory Board (DAB) for Council District 4* considered this request for a zone change from SF-5 Single-Family Residential to TF-3 Two-Family Residential; generally located on the west side of Sheridan, 50 feet north of University Avenue (325 South Sheridan).

MAPC staff present clarified that this zone change is a condition for sale of the property, there will be no construction of a new structure on the property with this request and the original structure is believed to have been built in the 1920's with the duplex added in the 1950's.

DAB members voted 7-0 to recommend approval of the zone change.

Please review this information when this request is considered.

City of Wichita
City Council Meeting
September 13, 2011

TO: Mayor and City Council Members

SUBJECT: ZON2000-00045 – Extension of time to complete the platting requirement for a zone change from SF-5 Single-Family Residential ("SF-5") to LC Limited Commercial ("LC") generally located south of Central and west of Tyler Road. (District V)

INITIATED BY: Metropolitan Area Planning Department

AGENDA ACTION: Planning (Consent)

Staff Recommendation: Approve a one-year extension of time to complete platting to September 13, 2012.

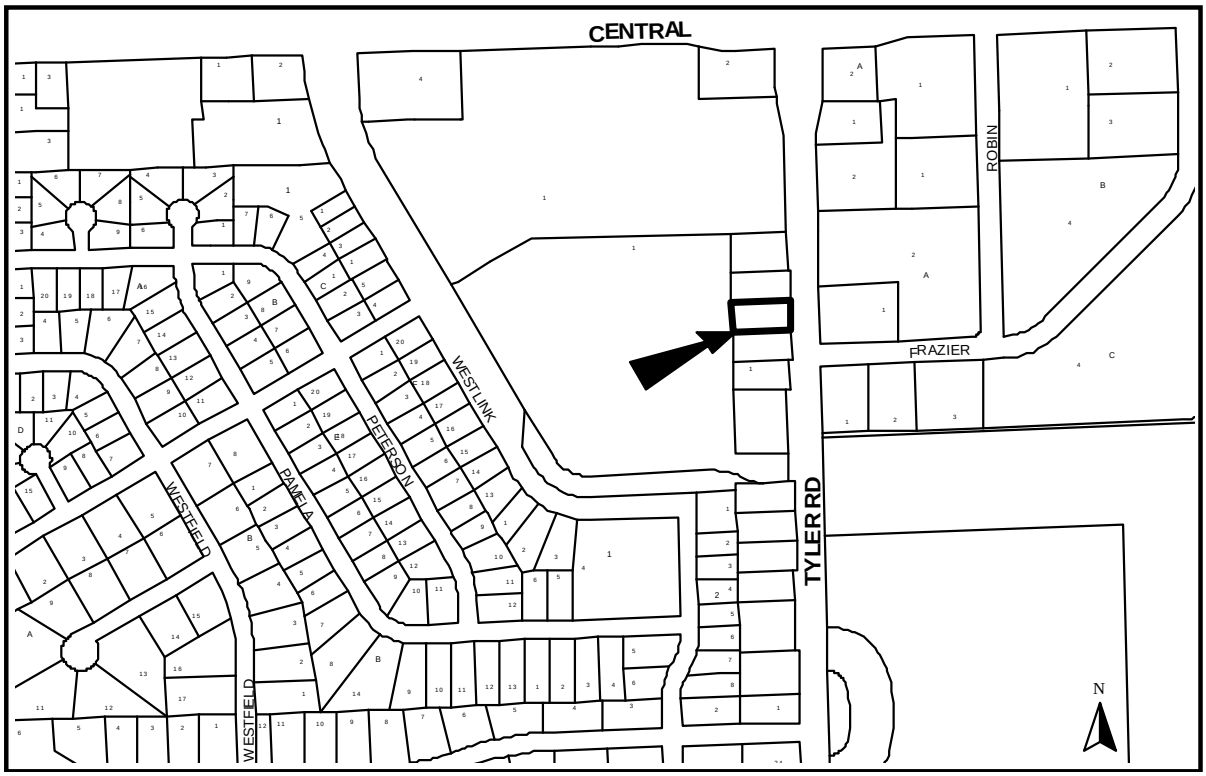

Background: On November 14, 2000, the City Council approved a zone change request from SF-5 Single-Family Residential ("SF-5") to LC Limited Commercial ("LC") on property located south of Central and west of Tyler Road. Approval of the zone change request was subject to the condition of platting the property within one year. Since the zone change was approved in 2000, eight platting extensions have been granted. The last request extended the platting deadline to August 10, 2011. The applicant requests an additional one-year extension of time to complete platting which requires City Council approval.

Analysis: Staff recommends that a one-year extension of time, by September 13, 2012, to complete platting be granted. The City Council may deny the request for an extension of time to complete platting. Denying the extension would declare the zone change null and void and would require reapplication and rehearing if the property owner still desired a zone change.

Financial Considerations: There are no financial considerations in regards to the request.

Goal Impact: The future impact of the zone change that would occurr when the site is platted would be to promote Economic Vitality.

Legal Considerations: No legal documents are required to enact the granting of the platting extension. The granting of a platting extension is indicated via letter to the applicant noting the extended platting deadline as granted by the City Council.

Recommendations/Actions: Approve a one-year extension of time to complete platting by September 13, 2012.

RECEIVED
AUG - 8 2011
METROPOLITAN PLANNING
ROUTE

August 3, 2011

Timothy J. & Catherine L. Girrens
8945 W. Central Ave
Wichita, Ks 67212
W- 943-8833
C- 300-0113

Wichita-Sedgwick County Metropolitan Area Planning Dept.
City Hall, 10th Floor
455 N. Main
Wichita, Ks 67202

Re: ZON2000-00045

Dear Mr. Slocum,

We are requesting a 1 year extension to complete the platting in order to receive the zoning change at the address commonly known as 541 North Tyler, Wichita, Kansas. We are the owners of Tuxedo Junction and Uniquely You Bridal currently located in Westlink Shopping Center. Enclosed is a check for $140.00.

Sincerely,

Tim Girrens

RECEIVED
AUG - 8 2011
METROPOLITAN PLANNING
ROUTE 9
3

August 3, 2011

Timothy J. & Catherine L. Girrens
8945 W. Central Ave
Wichita, Ks 67212
W- 943-8833
C- 300-0113

Wichita-Sedgwick County Metropolitan Area Planning Dept.
City Hall, 10th Floor
455 N. Main
Wichita, Ks 67202

Re: ZON2000-00045

Dear Mr. Slocum,

We are requesting a 1 year extension to complete the platting in order to receive the zoning change at the address commonly known as 541 North Tyler, Wichita, Kansas. We are the owners of Tuxedo Junction and Uniquely You Bridal currently located in Westlink Shopping Center. Enclosed is a check for $140.00.

Sincerely,

Tim Girrens

Agenda Item No. II-26

City of Wichita
City Council Meeting
September 13, 2011

TO: Mayor and City Council

SUBJECT: SUB2011-00026 -- Plat of Lord's Diner S. Hillside Addition located north of 31st Street South on the west side of Hillside. (District III)

INITIATED BY: Metropolitan Area Planning Department

AGENDA: Planning (Consent)

Staff Recommendation: Approve the plat.

MAPC Recommendation: Approve the plat. (13-0)

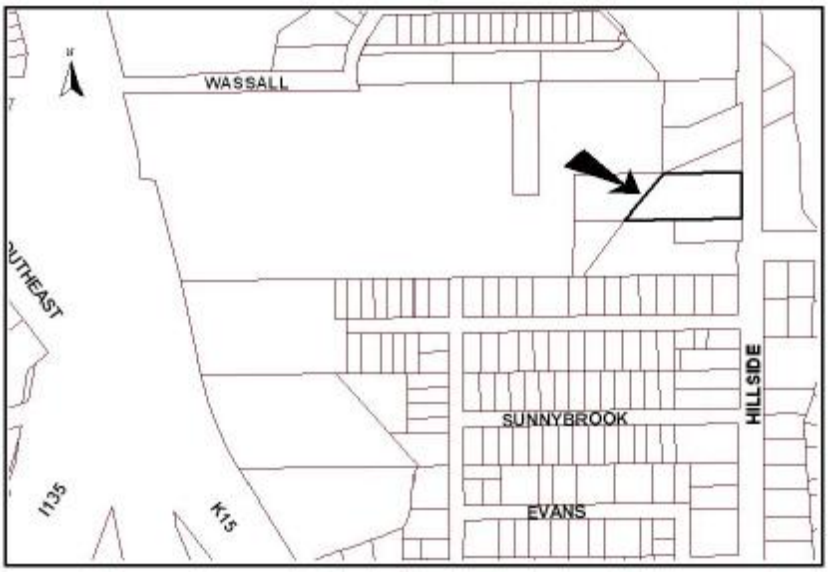

Background: The site consists of one lot on 1.74 acres. A zone change (ZON 2011-00019) has been approved from SF-5 Single-family Residential to LC Limited Commercial.

Analysis: Water and sewer services are available to serve the site. The plat has been reviewed and approved by the Metropolitan Area Planning Commission subject to conditions.

Publication of the Ordinance should be withheld until the plat is recorded with the Register of Deeds.

Financial Considerations: There are no financial considerations associated with the plat.

Goal Impact: Approval of the plat will ensure Efficient Infrastructure through the integration of streets, utilities and other public facilities.

Legal Considerations: The Ordinance has been approved as to form by the City's Law Department.

Recommendations/Actions: It is recommended that the City Council approve the documents and plat, authorize the necessary signatures and place the Ordinance on first reading.

Attachments: Ordinance

(OCA150004)

Published in The Wichita Eagle on September 23, 2011

ORDINANCE NO. 49-089

AN ORDINANCE CHANGING THE ZONING CLASSIFICATIONS OR DISTRICTS OF CERTAIN LANDS LOCATED IN THE CITY OF WICHITA, KANSAS, UNDER THE AUTHORITY GRANTED BY THE WICHITA-SEDGWICK COUNTY UNIFIED ZONING CODE, SECTION V-C, AS ADOPTED BY SECTION 28.04.010, AS AMENDED.

BE IT ORDAINED BY THE GOVERNING BODY OF THE CITY OF WICHITA, KANSAS.

SECTION 1. That having received a recommendation from the Planning Commission, and proper notice having been given and hearing held as provided by law and under authority and subject to the provisions of The Wichita-Sedgwick County Unified Zoning Code, Section V-C, as adopted by Section 28.04.010, as amended, the zoning classification or districts of the lands legally described hereby are changed as follows:

Case No. ZON2011-00019

Zone change request from SF-5 Single-family Residential to LC Limited Commercial on property described as:

Lot 1, Block 1, Lord's Diner, S. Hillside Addition, Wichita, Sedgwick County, Kansas.

Generally located north of 31st Street South, on the west side of Hillside.

SECTION 2. That upon the taking effect of this Ordinance, the above zoning changes shall be entered and shown on the "Official Zoning Map" previously adopted by reference, and said official zoning map is hereby reincorporated as a part of the Wichita-Sedgwick County Unified Zoning Code as amended.

SECTION 3. That this Ordinance shall take effect and be in force from and after its adoption and publication in the official City paper.

ADOPTED this 20th day of September, 2011.

ATTEST:

_____ _____

Karen Sublett, City Clerk Carl Brewer, Mayor

(SEAL)

APPROVED AS TO FORM:

_____

Gary E. Rebenstorf, Director of Law

City of Wichita
City Council Meeting
September 13, 2011

TO: Mayor and City Council

SUBJECT: A11-03 – Request by Michael E. and Kathy K. Smith to annex lands generally located one-half mile north of 21st Street North on the west side of 159th Street East (District II)

INITIATED BY: Metropolitan Area Planning Department

AGENDA: Planning (Consent)

Recommendation: Approve the annexation request and associated zone change ordinance.

Background: The City has received a request to annex 19.89 acres of land generally located one-half mile north of 21st Street North and on the west side of 159th Street East. The annexation area abuts the City of Wichita to the west and south of the property; however, the abutting property was annexed through "island" annexation procedures. Since there is intervening territory between the abutting property and other properties in the City limits, the subject property also must be annexed through "island" annexation procedures, which required the City to petition the Sedgwick County Commission for a finding that the annexation will not hinder the proper growth and development of the area or that of any other incorporated city in Sedgwick County. On August 3, 2011, the Sedgwick County Commission passed Resolution No. 144-201 (attached), which makes such a finding.

Analysis:
Land Use and Zoning: The annexation area consists of approximately 19.89 acres zoned "RR" Residential and is developed with a single family residence. The property owner has requested that upon annexation the zoning of the property become "SF-10" Single Family. An ordinance changing the zoning to "SF-10" Single Family (attached) is presented to the City Council for consideration along with the annexation request. The adjacent property to the north is zoned "RR" Rural Residential and is undeveloped. The adjacent property to the south is zoned "RR" Rural Residential and is developed with a single family residence. The adjacent property to the east is located in Butler County and is developed with a school. The adjacent properties to the west are zoned "SF-5" Single Family and are developing with single family residences.

Public Services: Water service is available to serve the subject property from a 16-inch main located in 159th Street East. In order to connect to water services, the subject property will have to pay connection fees ($2,370) and in lieu of assessment fees for transmission and distribution lines ($23,942). Sanitary sewer service is available to serve the subject property from an eight-inch main located along the rear of the subject property. In order to connect to sanitary sewer services, the subject property will have to pay connections fees ($1,350) and in lieu of assessment fees for sewer main and laterals ($59,521).

Street System: The subject property has access to 159th Street East, a three-lane arterial street.

Public Safety: Fire protection is currently provided to the area on the basis of a first-responder agreement between the City and County, and that service will continue following annexation. Sedgwick County Fire Station No. 38 at 1010 N. 143rd St. E. is the nearest fire station to the site. The nearest City station is Fire Station No. 18 at 2808 N. Webb. The nearest fire service will continue to be provided by Sedgwick County Fire District #1 and Wichita Fire Department joint operations at Station 38/6. Upon annexation, police protection will be provided to the area by the Patrol East Bureau of the Wichita Police Department, headquartered at 350 S. Edgemoor.

Parks: Undeveloped park land near the intersection of Central and Bristol, located approximately three miles southwest of the subject property at 11608 E. Central, is the nearest park. Plans for improvements to the undeveloped park land are underway. The Parks, Recreation and Open Space Plan identifies proposed new park target areas approximately one mile north and one mile south of the subject property.

School District: The annexation property is part of Unified School District 385 (Andover School District). Annexation will not change the school district.

Comprehensive Plan: The proposed annexation is consistent with the Wichita-Sedgwick County Comprehensive Plan. The annexation property falls within the Wichita 2030 Urban Growth Area as shown in the Plan.

Financial Considerations: The current approximate appraised value of the proposed annexation lands, according to County records, is $436,850 with a total assessed value of $50,360. Using the current City levy ($32.272/$1000 x assessed valuation), roughly yields $1,625 in City annual property tax revenues for the property upon annexation. No additional future development is proposed for the subject property that would generate additional property tax revenues.

Goal Impact: Approving the annexation request would impact Wichita's goal to ensure Efficient Infrastructure, and annexation of this property would assist the City in satisfying the demand for new infrastructure needed to support growth and development.

Legal Considerations: The property is eligible for annexation under K.S.A. 12-519, *et seq*. The annexation and zone change ordinances have been reviewed by the Law Department and approved as to form.

Recommendations/Actions: It is recommended that the City Council approve the annexation request, place the annexation and zone change ordinances on first reading, authorize the necessary signatures and instruct the City Clerk to publish the ordinances after approval on second reading.

Attachment: Map Sheet
Resolution No. 144-2011
Annexation Ordinance
Zone Change Ordinance

OCA150004
PUBLISHED IN THE WICHITA EAGLE ON SEPTEMBER 23, 2011

ORDINANCE NO. 49-090

AN ORDINANCE INCLUDING AND INCORPORATING CERTAIN BLOCKS, PARCELS, PIECES AND TRACTS OF LAND WITHIN THE LIMITS AND BOUNDARIES OF THE CITY OF WICHITA, KANSAS. (A11-03)

BE IT ORDAINED BY THE GOVERNING BODY OF THE CITY OF WICHITA, KANSAS:

SECTION 1. The governing body, under the authority of K.S.A. 12-519, et seq, hereby annexes the following blocks, parcels, pieces and tracts of land and they are hereby included and brought within the corporate limits of the City of Wichita, Kansas and designated as being part of City Council District II respectively:

That part of the Northeast Quarter of the Southeast Quarter of Section 1, Township 27 South, Range 2 East of the 6th P.M., Sedgwick County, Kansas, described as follows:

Beginning at the Northeast corner of the Northeast Quarter of said Southeast Quarter; thence South along the East line of the Northeast Quarter of said Southeast Quarter, 666.0 feet; thence West parallel to the North line of the Northeast Quarter of said Southeast Quarter, 480.0 feet; thence North parallel to the East line of the Northeast Quarter of said Southeast Quarter, 41.0 feet; thence West parallel to the North line of the Northeast Quarter of said Southeast Quarter, 110.0 feet;, thence South parallel to the East line of the Northeast Quarter of said Southeast Quarter, 41.0 feet; thence West parallel to the North line of the Northeast Quarter of said Southeast Quarter to a point on the West line of the Northeast Quarter of said Southeast Quarter, said point being 666.0 feet South of the North line of the Northeast Quarter of said Southeast Quarter, thence North along the West line of the Northeast Quarter of said Southeast Quarter 666.0 feet to the Northwest corner of the Northeast Quarter of the Southeast Quarter; thence East along the North line of the Northeast Quarter of said Southeast Quarter to the point of beginning, excluding road Rights-of-Way of record on the East.

SECTION 2. That if any part or portion of this ordinance shall be held or determined to be illegal, ultra vires or void the same shall not be held or construed to

alter, change or annul any terms or provisions hereof which may be legal or lawful. And in the event this ordinance in its entirety shall be held to be ultra vires, illegal or void, then in such event the boundaries and limits of said City shall be held to be those heretofore established by law.

SECTION 3. That the City Attorney be and he is hereby instructed at the proper time to draw a resolution redefining the boundaries and limits of the City of Wichita, Kansas, under and pursuant to K.S.A. 12-517, et seq.

SECTION 4. This ordinance shall become effective and be in force from and after its adoption and publication once in the official city paper.

ADOPTED at Wichita, Kansas, this September 20. 2011.

_____
Carl Brewer, Mayor

ATTEST:

_____
Karen Sublett, City Clerk

Approved as to form:

_____
Gary E. Rebenstorf, Director of Law

OCA150004
PUBLISHED IN THE WICHITA EAGLE ON SEPTEMBER 23, 2011

ORDINANCE NO. 49-091

AN ORDINANCE CHANGING THE ZONING CLASSIFICATIONS OR DISTRICTS OF CERTAIN LANDS LOCATED IN THE CITY OF WICHITA, KANSAS, UNDER THE AUTHORITY GRANTED BY THE WICHITA-SEDGWICK COUNTY UNIFIED ZONING CODE, SECTION I-I, AS ADOPTED BY SECTION 28.04.010, AS AMENDED.

BE IT ORDAINED BY THE GOVERNING BODY
OF THE CITY OF WICHITA, KANSAS.

SECTION 1. That having received a written request by the property owner to change the zoning classification or districts of the subject property to SF-10 Single Family upon annexation of the subject property and as provided for by the provisions of The Wichita-Sedgwick County Unified Zoning Code, Section I-I, as adopted by Section 28.04.010, as amended, the zoning classification or districts of the lands legally described below hereby are changed from RR Rural Residential to SF-10 Single Family.

Legal Description

That part of the Northeast Quarter of the Southeast Quarter of Section 1, Township 27 South, Range 2 East of the 6th P.M., Sedgwick County, Kansas, described as follows: Beginning at the Northeast corner of the Northeast Quarter of said Southeast Quarter; thence South along the East line of the Northeast Quarter of said Southeast Quarter, 666.0 feet; thence West parallel to the North line of the Northeast Quarter of said Southeast Quarter, 480.0 feet; thence North parallel to the East line of the Northeast Quarter of said Southeast Quarter, 41.0 feet; thence West parallel to the North line of the Northeast Quarter of said Southeast Quarter, 110.0 feet;, thence South parallel to the East line of the Northeast Quarter of said Southeast Quarter, 41.0 feet; thence West parallel to the North line of the Northeast Quarter of said Southeast Quarter to a point on the West line of the Northeast Quarter of said Southeast Quarter, said point being 666.0 feet South of the North line of the Northeast Quarter of said Southeast Quarter, thence North along the West line of the Northeast Quarter of said Southeast Quarter 666.0 feet to the Northwest corner of the Northeast Quarter of the Southeast Quarter; thence East along the North line of the Northeast Quarter of said Southeast Quarter to the point of beginning, excluding road Rights-of-Way of record on the East.; generally located approximately one-half mile north of 21st Street North on the west side of 159th Street East (2525 N. 159th St. E.).

SECTION 2**.** That upon the taking effect of this Ordinance, the above zoning changes shall be entered and shown on the "Official Zoning Map" previously adopted by reference, and said official zoning map is hereby reincorporated as a part of the Wichita-Sedgwick County Unified Zoning Code as amended.

SECTION 3. That this Ordinance shall take effect and be in force from and after its adoption and publication in the official City paper.

ADOPTED this 20th day of September, 2011.

ATTEST:

_____ _____

Karen Sublett, City Clerk Carl Brewer, Mayor

(SEAL)

Approved as to form:

_____

Gary E. Rebenstorf, Director of Law

Planning Agenda

Item: A11-03 Attachment No. 1

An ordinance including and incorporating certain blocks, parcels, pieces, and tracts of land within the limits and boundaries of the City of Wichita, Kansas, and relating thereto.

General Location: One-half mile north of 21st Street North on the west side of 159th Street East

Address:	2525 N. 159th St. E.	**Reason(s) for Annexation:**	
19.89	Area in Acres	X	Request
2	Existing population (est.)		Unilateral
1	Existing dwelling units	X	Island
0	Existing industrial/commercial units		Other:

Existing zoning:	"RR" Rural Residential

A11-03
WICHITA
SEDGWICK COUNTY

N

Software: ArcGIS
Map Data Sources: City of Wichita, Sedgwick County
Prepared: 2/9/09

It is understood that while the City of Wichita Data Center Geographical Information Systems Department have no indication and reason to believe that there are inaccuracies in information incorporated in the base map, the Data Center-GIS personnel make no warranty or representation, either expressed or implied, with respect to the information or data displayed.
Note: Public property represented on this map is not intended to be inclusive.

RESOLUTION NO. 144-2011

A RESOLUTION PURSUANT TO K.S.A. 12-520c TO FIND AND DETERMINE THAT THE PROPOSED ANNEXATION BY THE CITY OF WICHITA WILL NOT HINDER OR PREVENT THE PROPER GROWTH AND DEVELOPMENT OF THE AREA OR THAT OF ANY OTHER INCORPORATED CITY LOCATED IN SEDGWICK COUNTY

WHEREAS, K.S.A. 12-520c sets forth a procedure where a city may request the Board of County Commissioners (the Board) to find and determine whether a proposed annexation by the City of Wichita (the City) will hinder or prevent the proper growth and development of the area or that of any other incorporated city located in Sedgwick County; and

WHEREAS, on July 14, 2011, the clerk of the City submitted a certified copy of a Resolution No. 11-170 requesting the Board make the statutory finding; and

WHEREAS, the Board, after considering the information provided, has found and determined that the proposed annexation by the City will not hinder or prevent the proper growth and development of the area or that of any other incorporated city located in Sedgwick County;

NOW THEREFORE, BE IT RESOLVED BY THE BOARD OF COUNTY COMMISSIONERS OF SEDGWICK COUNTY, KANSAS, THAT THE CITY BE NOTIFIED OF THESE FINDINGS AND DETERMINATIONS:

Section I. On July 14, 2011, the clerk of the City filed with the Sedgwick County Board of County Commissioners a certified copy of Resolution No. 11-170 pursuant to K.S.A. 12-520c. The Board considered this matter at its regular agenda on August 3, 2011.

Section II. The land proposed to be annexed is located entirely within Sedgwick County, and it is generally described as land located near the intersection of 21st N and 159th E. and is specifically described in the city's resolution cited in the above section.

Section III. The owners of the lands described have consented to annexation into the City by submitting to the City a request for annexation.

Section IV. The Board hereby finds and determines that sufficient information has been presented to the Board to support a finding that the proposed annexation will not hinder or prevent the proper growth and development of the area or that of any other incorporated city located in Sedgwick County; and therefore, the Board finds and determines that based on the available evidence, the proposed annexation will not hinder or prevent the proper growth and development of the area or that of any other incorporated city located in Sedgwick County.

Section V. This resolution will take effect upon its passage. The County Counselor's office is directed to send a copy of this resolution by mail to the City of Wichita.

Commissioners present and voting were:

David M. Unruh, First District	Aye
Tim R. Norton, Second District	Aye
Karl Peterjohn, Third District	Aye
Richard Ranzau	Aye
James B. Skelton	Aye

DATED this 3 day of August, 2011.

BOARD OF COUNTY COMMISSIONERS
OF SEDGWICK COUNTY, KANSAS

David M. Unruh

David M. Unruh, Chairman
First District

ATTEST:

Kelly B. Arnold, County Clerk

CLERK OF SEDGWICK COUNTY
SEDGWICK COUNTY
KANSAS
KANSAS

APPROVED AS TO FORM:

Robert W. Parnacott

Robert W. Parnacott, Assistant County Counselor

City of Wichita
City Council Meeting
September 13, 2011

TO: Wichita Airport Authority

SUBJECT: 1980 Airport Road Roof Replacement
Wichita Mid-Continent Airport

INITIATED BY: Department of Airports

AGENDA: Wichita Airport Authority (Consent)

Recommendation: Initiate the project and approve the budget.

Background: The hangar and office facilities at 1980 Airport Road require roof replacement. The property is under lease to Hawker Beechcraft Services. The Wichita Airport Authority, as Lessor, has contractual responsibility for roof replacement of this property. This project is included in the approved Capital Improvement Program (CIP).

Analysis: The hangar was constructed in the 1950s with additions in the following decades. The current roof has exceeded its useful life and is in a deteriorated condition.

Financial Considerations: The construction contract will be awarded through the Board of Bids process. The budget request to cover the anticipated roof replacement cost is $291,000. The project will be funded with Airport revenue either directly or through the repayment of General Obligation bonds.

Goal Impact: The Airport's contribution to the Economic Vitality of Wichita is promoted through accommodating tenants and making improvements which will enhance facilities and infrastructure.

Legal Considerations: None.

Recommendations/Actions: It is recommended that the Wichita Airport Authority initiate the project and approve the budget.

Attachments: None.

City of Wichita
City Council Meeting
September 13, 2011

TO: Wichita Airport Authority

SUBJECT: Federal Aviation Administration
Lease No. DTFASW-10-L-00268, Supplemental Agreement No. 3
2204 South Tyler Road – Wichita Mid-Continent Airport

INITIATED BY: Department of Airports

AGENDA: Wichita Airport Authority (Consent)

Recommendation: Approve the Supplemental Agreement.

Background: On August 17, 2010, the Wichita Airport Authority (WAA) approved an agreement with the Federal Aviation Administration (FAA) for use of a 3,188 sq. ft. office building located at 2204 South Tyler Road (Tyler facility) for the Manufacturing Inspection District Office (MIDO) division. Subsequent to the execution of the agreement, FAA staff requested that a tenant improvement be done to the building.

Analysis: Based upon the FAA's Information Technology (IT) standards, the tenant requests that an air conditioning unit be installed in the IT Room. The air conditioning unit is necessary to keep the communications equipment at the designated room temperature.

Financial Considerations: The FAA has agreed to reimburse the WAA for the tenant improvement in a lump sum payment of $10,774. Airport staff will coordinate the necessary work for the installation of the air conditioning unit.

Goal Impact: The Airport's contribution to the Economic Vitality of Wichita is promoted through negotiating agreements which allow Mid-Continent's Airport partners to continue its operations on the Airport, which in turn, generate rental income for the WAA and allows the Airport to continue its operation on a self-sustaining basis.

Legal Considerations: The Supplemental Agreement has been approved as to form by the Law Department.

Recommendations/Actions: It is recommended that the Wichita Airport Authority approve the Supplemental Agreement and authorize the necessary signatures.

Attachments: Supplemental Agreement.

U.S. Department of Transportation Federal Aviation Administration SUPPLEMENTAL LEASE AGREEMENT	SUPPLEMENTAL AGREEMENT NO. 3	DATE
	TO LEASE NO. DTFASW-10-L-00268	

ADDRESS OF PREMISES: Approximately 3,188 square feet of rentable space located on the Wichita Mid-Continental Airport, more particularly described as 2204 S. Tyler, Wichita, Kansas.

THIS AGREEMENT, made and entered into this date by and between the WICHITA MID-CONTINENTAL AIRPORT AUTHORITY, whose address is 2173 Air Cargo Road, Wichita, Kansas, 67277, hereinafter called the LESSOR, and the UNITED STATES OF AMERICA, hereinafter called the GOVERNMENT:

WHEREAS, on September 13, 2010, the parties hereto entered into Lease No. DTFASW-10-L-00268, for the consideration and purposes more particularly stated in said lease; and,

WHEREAS, the Government requests additional tenant improvements consisting of installation of a heat pump split system air conditioning unit in the IT Room; and,

WHEREAS, the Lessor agrees to purchase and install said air conditioning unit according to Government specifications for a total cost of $10,774.40; and

WHEREAS, the Government agrees to make a one-time, lump sum payment in the amount of $10,774.40 within 30 days upon completion and acceptance of work as well as receipt of a final, itemized invoice.

NOW THEREFORE, effective July 25, 2011, these parties for the considerations hereinafter mentioned covenant and agree that the said Lease is amended, as follows:

Article 5f is hereby added as follows:

5f. INSTALLATION OF AIR CONDITIONING UNIT IN IT ROOM – The Lessor agrees to furnish, install and maintain the required air conditioning unit in the IT Room of the leased building. The air conditioning unit shall be provided, installed and maintained by the Lessor according to the specifications listed in the attached Exhibit "D" Wichita Airport Authority's Statement of Work.

Total costs of the project, including fees, are $10,774.40. Payment will be made within 30 days upon the inspection and acceptance by the designated Government representative as well as the receipt of a detailed invoice submitted to the Real Estate Contracting Officer.

All other terms and conditions of the lease shall remain in force and effect.

Important: Lessor X is, ☐ is not required to sign this document and return 2 copies to the issuing office. Return receipt requested.

IN WITNESS WHEREOF, the parties subscribed their names as of the above date.

ATTEST:

THE WICHITA AIRPORT AUTHORITY
WICHITA, KANSAS

By: _____
Karen Sublett, City Clerk

By: _____
Carl Brewer, President
"LESSOR"

By: _____
Victor D. White, Director of Airports

APPROVED AS TO FORM: _____ Date: _____
Director of Law

UNITED STATES OF AMERICA

_____
Morgan C. Finley
Real Estate Contracting Officer

Date: _____

The Wichita Airport Authority requests quotes for a **Heat Pump split system** to be installed at the FAA MIDO facility, located at 2204 S. Tyler Road, Wichita Ks.

Provide quote as per specification

- Provide equipment, material and labor to install a 12,000 BTU split heat pump system (no backup heat) per manufacturer specifications.
- All work is to be completed within normal working hours Monday – Friday.
- Heat pump to be located on the **roof** with plastic pad.
- Indoor blower unit to be **ceiling** mount style.
- Install condensate drain line through cinder block wall and terminate in mop sink in adjacent mechanical room. Support line to wall(s) as needed.
- Re-configure ceiling tile support grid opening to accommodate ceiling mount indoor unit if necessary.
- Indoor blower unit grill face to be finished flush with existing ceiling tile.
- Provide line volt electrical circuit hookup from panel to equipment.
- Provide fused disconnect at equipment.
- Provide thermostatic control with wall mount stat or remote control.
- Provide Owner with 2 copies of equipment manuals and thermostat control manuals.
- Provide Carlyle approved roofing contractor to install necessary flashings as per manufacturer specifications to ensure roof penetrations to be in a water tight condition and maintain roof material warranty.
- Clean up work area upon completion.

Warranty

A. Provide standard manufacturer warranty on all equipment components and system components.

B. Provide a **2 year** service and repair agreement warranty for all equipment and all system components in addition to any manufacturer warranty.

C. Provide Owner with 2 copies of written warranty.

Insurance and Local Code Requirements

A. Contractor is to be licensed/bonded/insured as required by City of Wichita.

B. Contractor is to provide proof of insurance to City purchasing agent.

C. All work is to be completed in accordance with all City and local codes.

Equipment Specification:

HVAC equipment:

12,000 BTU Cooling Heat pump (no back up heat)
Hail guard by equipment manufacturer
Indoor blower unit – Ceiling mount style
Condensate pump (if not already included with unit)
Copper line set/insulation
Copper coils
Low ambient equipment protection to 0 degrees
Digital wall thermostat- by manufacturer or White Rogers digital stat
Plastic pad for heat pump

Electrical Line Voltage – Low voltage

Indoor blower unit circuit as required by equipment manufacturer/city code
Heat pump circuit as required by equipment manufacturer/city code
Electrical fused disconnect for heat pump
Electrical fused disconnect for indoor blower unit
24v control or other

Roof penetration

Roof flashing(s) as needed – Set by Carlyle approved roofing contractor
Heat pump pad secured to roof by Carlyle approved roofing contractor
EPDM membrane material (provided by approved Carlyle roofing contractor)

Please submit quotes to:

Frank Heagler
Wichita Airport Authority
Ph- 316 946-4751
fheagler@wichita.gov
Fax- 316 946-4740

City of Wichita
City Council Meeting
September 13, 2011

TO: Wichita Airport Authority

SUBJECT: Federal Aviation Administration
Lease No. DTFACN-12-L-00014
1801 Airport Road - Wichita Mid-Continent Airport

INITIATED BY: Department of Airports

AGENDA: Wichita Airport Authority (Consent)

Recommendation: Approve the Agreement.

Background: The Wichita Airport Authority (WAA) and the Federal Aviation Administration (FAA) entered into an eighteen-year agreement in 1991 and extended the agreement for one year for the office complex located at 1801 Airport Road. The office complex houses the following divisions: Aircraft Certification Office (ACO), Automated Flight Service Station (AFS), and Flight Standards District Office (FSDO). The lease will expire on September 30, 2011, and the FAA wishes to enter into a new lease for a ten-year period.

Analysis: The building complex includes 31,608 sq. ft. of office and technical space. In addition, there is 7,017 sq. ft. of basement storage space, maintenance storage space, and a tornado shelter. This is a full service lease that includes the facility rent, janitorial services, maintenance, and utility services. Telecommunications (phone and internet service) are not included in the lease.

Financial Considerations: Negotiations with the FAA set the base rental rate at $12 per sq. ft. for the 31,608 sq. ft. of office and technical space and a rental rate of $6 per sq. ft. for the remaining areas (7,017 sq. ft.). The janitorial services will be at the rate of $0.97 per sq. ft. and utility services will be at the rate of $1.46 per sq. ft. These rates are based upon leases that the FAA has recently entered into with the WAA for similar office facilities on the Airport. Therefore, the new combined annual revenue for facility rent, janitorial services, maintenance, and utility services to the WAA is $524,180. This amount reflects an annual increase of $40,183 that is new revenue to the WAA.

Goal Impact: The Airport's contribution to the Economic Vitality of Wichita is promoted through negotiating agreements which allow Mid-Continent's Airport partners to continue its operations on the Airport, which in turn, generate rental income for the WAA and allows the Airport to continue its operation on a self-sustaining basis.

Legal Considerations: The Agreement has been approved as to form by the Law Department.

Recommendations/Actions: It is recommended that the Wichita Airport Authority approve the Agreement and authorize the necessary signatures.

Attachments: Agreement.

U.S. DEPARTMENT OF TRANSPORTATION
FEDERAL AVIATION ADMINISTRATION

LEASE for Real Property

Lease No: DTFACN- 12 - L – 00014
ACO, CWO, SSC and FSDO
Wichita, Kansas 67209

Section 1 – Space Lease
1. THIS LEASE, entered into by and between WICHITA AIRPORT AUTHORITY whose interest in the property hereinafter described is that of Owner, hereby referred to as LESSOR, and the United States of America, hereinafter referred to as the GOVERNMENT OR FAA: WITNESSETH: The Parties hereto, and for the consideration hereinafter mentioned, covenant and agree as follows:

2. DESCRIPTION - The Lessor hereby leases to the GOVERNMENT the following described premises:

Approximately 38,625 square feet of office, storage and technical space to be utilized by Federal Aviation Administration employees located at 1801 Airport Road, Wichita Mid-Continental Airport, Wichita, Kansas 67209. Leased premises are more particularly described on Exhibit "A", drawing, attached hereto and made a part hereof to be used for such purposes as determined by the Federal Aviation Administration.

3. TERM - To have and to hold, for the term commencing on October 1, 2011 and continuing through September 30, 2021 inclusive, PROVIDED, that adequate appropriations are available from year to year for the payment of rentals.

This lease succeeds lease number DTFA09-91-L-10547, which expires on September 30, 2011.

4. CANCELLATION - The GOVERNMENT may terminate this lease at any time, in whole or in part, if the Real Estate Contracting Officer (RECO) determines that a termination is in the best interest of the Government, on or after October 1, 2012 by giving at least 30 days notice in writing to the Lessor. No rental shall accrue after the effective date of termination. Said notice shall be computed commencing with the day after the date of mailing.

5. RENTAL - Rent in the amount of $524,180.52 per annum paid at a rate of $43,681.71 per month shall be payable to the Lessor in arrears and will be due on the first workday of each month, without the submission of invoices or vouchers. Subject to available appropriations. Rent shall be considered paid on the date a check is dated or an electronic funds transfer is made. Rent for a period of less than a month shall be prorated. Checks will be made payable to:
Wichita Airport Authority
2173 South Air Cargo Road
Wichita, KS 67209

5a. ANNUAL BREAKDOWN OF COSTS AS FOLLOWS:

Office and technical space	31,608 sf @ $14.43 psf =	$456,103.44	($38,008.62/mo)
Storage, Maintenance Building	2,900 sf @ $10.46 psf =	$30,334.00	($2,527.83/mo)
Storage, Basement Assigned	1,496 sf @ $10.46 psf =	$15,648.16	($1,304.01/mo)
Common Area, Basement Shelter	2,621 sf @ $8.43 psf =	$22,095.00	($1,841.25/mo)
TOTAL ANNUAL RENT	38,625 sq. ft.	$524,180.52 PER ANNUM	

** For reference only

Base rental:	$12.00 psf
Utilities:	$1.46 psf
Janitorial:	$0.97 psf
	$14.43 psf

6. SERVICES AND UTILITIES To be provided by Lessor as part of rent. Services, utilities, and maintenance will be provided daily, extending from 6:00 a.m. to 6:00 p.m. except Saturday, Sunday, and Federal holidays. Services supplied to technical equipment and the Contract Weather Observer (CWO) shall be supplied 24 hours a day, and seven days a week. The GOVERNMENT shall have access to the leased premises at all times, including the use of electrical services, toilets, lights, elevators, and GOVERNMENT office machines without additional payment.

HEAT 68 DEG to 72 DEG F.
ELECTRICITY
SPECIAL POWER – NOTED BELOW
WATER (hot & cold)
SNOW AND ICE REMOVAL (Included in base rent amount)
TRASH REMOVAL
CHILLED DRINKING WATER
HVAC Cooling – 68 DEG to 75 DEG. F
DAILY JANITORIAL SERV. & SUPPLIES – Ref. Attachment A, Clause D10
GROUND MAINTENANCE (Included in base rent amount) – Ref. Attachment A, Clause B1
PEST CONTROL (Included in base rent amount) – Ref. Attachment A, Clause B2
FIRE ALARM SYSTEM (Included in base rent amount)-Ref. Attachment A, Clause C1
WINDOW WASHING (Included in base rent amount) – Twice per year
INITIAL & REPLACEMENT LAMPS, TUBES, & BALLASTS
PAINTING – Interior painted surfaces of the leased premises, including any partitioning installed by the Government or Lessor after Government occupancy, must be repainted after working hours at Lessor's expense **at least every 5 years.** This includes moving and return of furniture.

Section 2 - GENERAL CLAUSES:

7A. INSPECTION (10/96) - The GOVERNMENT reserves the right, at any time after the lease is signed and during the term of the lease, to inspect the leased premises and all other areas of the building to which access is necessary to ensure a safe and healthy work environment for the GOVERNMENT tenants and the Lessor's performance under this lease. The GOVERNMENT shall have the right to perform sampling of suspected hazardous conditions.

7B. DAMAGE BY FIRE OR OTHER CASUALTY - If the building or structure is partially or totally destroyed or damaged by fire or other casualty or if environmentally hazardous conditions are found to exist so that the leased premises are untenantable as determined by the GOVERNMENT, the GOVERNMENT may terminate the lease, in whole or in part, immediately by giving written notice to the Lessor and no further rental will be due after the GOVERNMENT vacates the premises.

7C. MAINTENANCE OF THE PREMISES (10/96) - The Lessor shall maintain the demised premises, including the building, grounds, and all equipment, fixtures, and appurtenances furnished by the Lessor under this lease, in good repair and tenantable condition.

7D. FAILURE IN PERFORMANCE - In the event the Lessor fails to perform any service, to provide any item, or meet any requirement of this lease, the GOVERNMENT may perform the service, provide the item, or meet the requirement, either directly or through a contract. The GOVERNMENT may deduct any costs incurred for the service or item from the rental payments. No deduction of rent pursuant to this clause shall constitute default by the GOVERNMENT on this lease.

7E. DEFAULT BY LESSOR (10/96) - (1) Each of the following shall constitute a default by Lessor under this lease: (a) If the Lessor fails to perform the work required to deliver the leased premises ready for occupancy by the GOVERNMENT with such diligence as will ensure delivery of the leased premises within the time required by the lease agreement, or any extension of the specified time. (b) Failure to maintain, repair, operate or service the premises as and when specified in this lease, or failure to perform any other requirement of this lease as and when required provided such failure which shall remain uncured for a reasonable period of time as specified by the Real Estate Contracting Officer, following Lessor's receipt of written notice thereof from the Real Estate Contracting Officer. (c) Repeated failure by the Lessor to comply with one or more requirements of this lease shall constitute a default notwithstanding that one or all failures shall have been timely cured pursuant to this clause.
(2) If default occurs, the GOVERNMENT may, by written notice to the Lessor, terminate the lease in whole or in part.

7F. COMPLIANCE WITH APPLICABLE LAWS (10/96) - The Lessor shall comply with all federal, state and local laws applicable to the Lessor as owner or lessor, or both, of building or premises, including, without limitation, laws applicable to the construction, ownership, alteration or operation of both or either thereof, and will obtain all necessary permits, licenses and similar items at Lessor's expense. This lease shall be governed by Federal law.

7G. DELIVERY AND CONDITION (10/96) - Unless the GOVERNMENT elects to have the space occupied in increments, the space must be delivered ready for occupancy as a complete unit. The GOVERNMENT reserves the right to determine when the space is ready to occupy.

7H. ALTERATIONS – Upon notice to the Lessor, the GOVERNMENT shall have the right during the existence of this lease, to make alterations, attach fixtures, and erect structures or signs in or upon the premises hereby leased as required for aviation safety, which fixtures, additions or structures so placed in, on, upon, or attached to the said premises shall be and remains the property of the GOVERNMENT and may be removed or otherwise disposed of by the GOVERNMENT subject to the Lessor's approval not to be unreasonably withheld. The Parties hereto mutually agreed and understood that no restoration rights shall accrue to the Lessor for any alterations to the leased premises under this lease, and that the GOVERNMENT shall have the option of abandoning alterations in place, when terminating the lease, at no additional cost.

7I. ACCESSIBILITY (10/06) - The Building and the leased premises shall be accessible to persons with disabilities pursuant to the Architectural Barriers Act and Rehabilitation Act as detailed in the Architectural Barriers Act Accessibility Standards (ABAAS) 41 CFR Parts 102-71, 102-72, et.al and all applicable state and local accessibility laws and regulations.

7J. CHANGES

1 The Real Estate Contracting Officer may at any time, by written order, make changes within the general scope of this lease in any one or more of the following:
Work or services;
Facilities or space layout; or
Amount of space, provided the Lessor consents to the change and the requested change do not violate FAA grant assurances.
2 If any such change causes an increase or decrease in Lessor's cost of or the time required for performance under this lease, whether or not changed by the order, the Real Estate Contracting Officer shall modify this lease to provide for one or more of the following:
An equitable adjustment in the rental rate;
A lump sum equitable adjustment; or
An equitable adjustment of the annual operating costs per Occupiable square foot specified in the SFO.
3 The Lessor shall assert its right to an adjustment under this clause within 30 days from the date of receipt of the change order and shall submit a proposal for adjustment. Failure to agree to any adjustment shall be a dispute under the Protest and Disputes clause. However, nothing in this clause shall excuse the Lessor from proceeding with the change as directed unless such change violates FAA grant assurances.
4 Absent such written change order by the Real Estate Contracting Officer, the Government shall not be liable to Lessor under this clause.

7K. OFFICIALS NOT TO BENEFIT (10/96) - No member of or delegate to Congress, or resident commissioner, shall be admitted to any share or part of this contract, or to any benefit

arising from it. However, this clause does not apply to this contract to the extent that this contract is made with a corporation for the corporation's general benefit.

7L. COVENANT AGAINST CONTINGENT FEES (8/02) - The Lessor warrants that no person or agency has been employed or retained to solicit or obtain this contract upon an agreement or understanding for a contingent fee, except a bona fide employee or agency. For breach or violation of this warranty, the GOVERNMENT shall have the right to annul this contract without liability or, in its discretion, to deduct from the contract price or consideration, or otherwise recover the full amount of the contingent fee.

7M. ANTI-KICKBACK (10/96) - The Anti-Kickback Act of 1986 (41 U.S.C. 51-58) (the Act), prohibits any person from (1) Providing or attempting to provide or offering to provide any kickback; (2) Soliciting, accepting, or attempting to accept any kickback; or (3) Including, directly or indirectly, the amount of any kickback in the contract price charged by a prime Contractor to the United States or in the contract price charged by a subcontractor to a prime Contractor or higher tier subcontractor.

7N. CONTRACT DISPUTES (11/03)

(a) All contract disputes and arising under or related to this lease contract shall be resolved through the Federal Aviation Administration (FAA) dispute resolution system at the Office of Dispute Resolution for Acquisition (ODRA) and shall be governed by the procedures set forth in 14 C.F.R. Parts 14 and 17, which are hereby incorporated by reference. Judicial review, where available, will be in accordance with 49 U.S.C. 46110 and shall apply only to final agency decisions. A Lessor may seek review of a final FAA decision only after its administrative remedies have been exhausted.

(b) All Contract Disputes shall be in writing and shall be filed at the following address:

Office of Dispute Resolution for Acquisition, AGC-70
Federal Aviation Administration, 800 Independence Avenue, S.W., Room 323
Washington, DC 20591
Telephone: (202) 267-3290
Facsimile: (202) 267-3720

(c) A contract dispute against the FAA shall be filed with the ODRA within two (2) years of the accrual of the lease contract claim involved. A contract dispute is considered to be filed on the date it is received by the ODRA. The full text of the Contract Disputes clause is incorporated by reference. Upon request the full text will be provided by the RECO.

7O. EXAMINATION OF RECORDS (8/02) - The Comptroller General of the United States, the Administrator of FAA or a duly authorized representative from either shall, until 3 years after final payment under this contract have access to and the right to examine any of the Lessor's directly pertinent books, documents, paper, or other records involving transactions related to this contract.

7P. ASSIGNMENT OF CLAIMS (10/96) - Pursuant to the Assignment of Claims Act, as amended, 31 USC 3727, 41 USC 15, the Lessor may assign his rights to be paid under this lease.

7Q. SUBORDINATION, NONDISTRUBANCE AND ATTORNMENT (10/96) - The GOVERNMENT agrees, in consideration of the warranties herein expressed, that this lease is subject and subordinate to any and all recorded deeds of trust, mortgages, and other security instruments now or hereafter imposed upon the premises, so long as such subordination shall not interfere with any right of the GOVERNMENT under this lease. The Parties hereto mutually agreed that this subordination shall be self-operative and that no further instrument shall be required to effect said subordination.

In the event of any sale of the premises, or any portion thereof, or any such transfer of ownership, by foreclosure of the lien of any such security instrument, or deed provided in lieu of foreclosure, the GOVERNMENT will be deemed to have attorned to any purchaser, successor, assigns, or transferee. The succeeding owner will be deemed to have assumed all rights and obligations of the Lessor under this lease, establishing direct privity of estate and contract between the GOVERNMENT and said purchasers/transferees, with the same force, effect and relative priority in time and right as if the lease had initially been entered into between such purchasers or transferees and the GOVERNMENT; provided that such transferees shall promptly provide, following such sale or transfer, appropriate documentation deemed necessary by the Real Estate Contracting Officer, and shall promptly execute any instrument, or other writings, as shall be deemed necessary to document the change in ownership.

7R. LESSOR'S SUCCESSORS (10/96) - The terms and provisions of this lease and the conditions herein bind the Lessor and the Lessor's heirs, executors, administrators, successors, and assigns.

7S. SUBLEASE - The GOVERNMENT reserves the right to sublease the space covered under this lease to another agency or private party. In subleasing this space to another party the GOVERNMENT is not relieved from its responsibilities under the terms of this lease, unless otherwise agreed upon with the Lessor. Any sublease shall meet the requirements of FAA grant assurances. Subleasing shall be limited to aviation related purposes only with written approval of the Wichita Airport Authority.

7T. NO WAIVER (10/96) - No failure by the GOVERNMENT to insist upon strict performance of any provision of this lease, or failure to exercise any right, or remedy consequent to a breach thereof, shall constitute a waiver of any such breach in the future.

7U. INTEGRATED AGREEMENT (10/96) - This Lease, upon execution, contains the entire agreement of the parties, and no prior written or oral agreement, express or implied shall be admissible to contradict the provisions of this lease.

7V. EQUAL OPPORTUNITY (10/96) - The Lessor shall have on file affirmative action programs required by the rules and regulations of the Secretary of Labor (41 CFR 60-1 and 60-2).

7W. AFFIRMATIVE ACTION FOR SPECIAL DISABLED AND VIETNAM ERA VETERANS (10/96) - The Lessor agrees to comply with the rules, regulations, and relevant orders of the Secretary of Labor (Secretary) issued under the Vietnam Era Veterans'

Readjustment Assistance Act of 1972 (the Act), as amended. If the Lessor does not comply with the requirements of this clause, appropriate actions may be taken under the rules, regulations, and relevant orders of the Secretary issued pursuant to the Act.

7X. AFFIRMATIVE ACTION FOR DISABLED WORKERS (10/96) - The Lessor agrees to comply with the rules, regulations, and relevant orders of the Secretary of Labor (Secretary) issued under the Rehabilitation Act of 1973 (29 USC 793) (the Act), as amended. If the Lessor does not comply with the requirements of this clause, appropriate actions may be taken under the rules, regulations, and relevant orders of the Secretary issued pursuant to the Act.

7Y. SEISMIC SAFETY FOR EXISTING BUILDINGS (1/07) –Unless it is determined by the GOVERNMENT'S Contracting Officer that seismically conforming premises are not available, all existing buildings leased by the GOVERNMENT under this contract must meet the minimum acceptable performance seismic standard of 'Life Safety' as specified in Section 2.2 of Standards of Seismic Safety for Existing Federally Owned or Leased Buildings and Commentary issued by the Interagency Committee on Seismic Safety in Construction as ICSSC RP-6. RP-6 is available on-line at (http://fire.nist.gov/bfrlpubs/build01/PDF/b01056.pdf) and is available in print from the National Institute of Standards and Technology as NISTIR 6762.

All offers received in response to screening information request will be evaluated to determine whether they are in compliance with "Life Safety". If at least one offeror is fully compliant, all offerors who are not fully compliant will be considered non-responsive and ineligible for award.

In the event a building with a certification of seismic compliance is occupied by the GOVERNMENT and is later determined to not meet the standard indicated on the certification form, the GOVERNMENT at its discretion may require the Lessor to meet the agreed upon standard or may terminate this lease upon giving written notice, with no cost accruing to the GOVERNMENT, not withstanding any other agreements contained in this lease.

(a) COMPLIANCE with LIFE SAFETY
Buildings designed and constructed in compliance with the seismic requirements of the building codes delineated in Section 1.3.1 of RP-6 are considered to fully meet the GOVERNMENT'S minimum seismic requirement. The offeror shall provide proof of compliance in the form of a written certification by an independent licensed structural engineer that the building was designed, built and maintained to the requirements of RP-6. The structural engineer certification shall be in the format of the enclosed CERTIFICATION OF SEISMIC COMPLIANCE. If the building cannot be certified in accordance with RP-6, the structural engineer must evaluate the building using the American Society for Civil Engineers (ASCE) 31-03, Seismic Evaluation of Existing Buildings and attach the evaluation to the Certification of Seismic Compliance. Buildings meeting the requirements of ASCE 31-03 using a safety objective of 'Life Safety' are considered to meet the GOVERNMENT'S requirement.

(b) LESS THAN LIFE SAFETY
Existing buildings, which cannot achieve life safety, will require documentation by an independent licensed structural engineer to describe the actual level of seismic

compliance.
In the event a building with a certification of seismic compliance is occupied by the GOVERNMENT and is later determined to not meet the standard indicated on the certification form, the GOVERNMENT at its discretion may require the Lessor to meet the agreed upon standard or may terminate this lease upon giving written notice, with no cost accruing to the GOVERNMENT, not withstanding any other agreements contained in this lease.

7Z. SEISMIC SAFETY FOR NEW CONSTRUCTION (1/07) - All construction performed under this contract must, as a minimum, be in accordance with current edition of the International Building Code (IBC). Local seismic building codes may be use in place of IBC if, and only if, they provide a higher level of occupant safety. The Lessor shall provide, prior to the GOVERNMENT'S acceptance of the building(s), a written certification from an independent licensed structural engineer that the building(s) conforms to this requirement. The structural engineer certification shall be in the format of the enclosed CERTIFICATION OF SEISMIC COMPLIANCE. When a code equivalency study is required it shall be attached to the structural engineer's certification.
During the design and development stages of construction, all design and engineering documents, including structural engineering calculations, shall be made available within twenty-four hours, after a verbal request from GOVERNMENT personnel to review said documents, or in another time frame agreed to in writing by the Real Estate Contracting Officer.

The sole purpose of this clause is to certify that the end product of this contract meets the seismic standards of the Department of Transportation. This clause does not in any way change the requirements of the statement of work, which may require seismic standards higher than those required by this clause.

In the event a building with a certification of seismic compliance is occupied by the GOVERNMENT and is later determined to not meet the standard indicated on the form "Certification of Seismic Compliance Form", the GOVERNMENT at its discretion may require the Lessor to meet the agreed upon standard or may terminate this lease upon giving written notice, with no cost accruing to the GOVERNMENT, not withstanding any other agreements contained in this lease.

7AA. LABOR STANDARDS (6/09) – By signing this lease, the Lessor certifies to the Real Estate Contracting Officer (RECO) that all laborers and mechanics employed or working upon the leased premises will be paid unconditionally and not less often than once a week, and without subsequent deduction or rebate on any account (except such payroll deductions as are permitted by regulations issued by the Secretary of Labor under the Copeland Act (29 CFR Part 3)), the full amount of wages and bona fide fringe benefits (or cash equivalents thereof) due at time of payment computed at rates not less than those contained in the wage determination of the Secretary of Labor which is attached hereto and made a part hereof, regardless of any contractual relationship which may be alleged to exist between the Lessor and such laborers and mechanics. Contributions made or costs reasonably anticipated for bona fide fringe benefits under section 1(b)(2) of the Davis-Bacon Act on behalf of laborers or mechanics are considered wages paid to such laborers or mechanics, subject to the provisions of paragraph (d) of this clause; also, regular

contributions made or costs incurred for more than a weekly period (but not less often than quarterly) under plans, funds, or programs which cover the particular weekly period are deemed to be constructively made or incurred during such period. Such laborers and mechanics shall be paid not less than the appropriate wage rate and fringe benefits in the wage determination for the classification of work actually performed, without regard to skill, except as provided in the clause titled "Apprentices, Trainees, and Helpers." Laborers or mechanics performing work in more than one classification may be compensated at the rate specified for each classification for the time actually worked therein; provided, that the employer's payroll records accurately set forth the time spent in each classification in which work is performed. The wage determination (including any additional classifications and wage rates conformed under paragraph (b) of this clause) and the Davis-Bacon poster (WH-1321) shall be posted at all times by the Lessor and its subcontractors at the site of the work in a prominent and accessible place where it can be easily seen by the workers.

7BB. LIABILITY – With regard to any liability which may arise from the use and/or operation of this facility, each party expressly agrees that it shall be solely and exclusively liable for the negligence of its own agents, servants and/or employees and that neither party looks to the other to save or hold it harmless for the consequences of any negligence on the part of one of its own agents, servants and/or employees. Neither party is hereby waiving any rights of protection it presently enjoys by reason of any applicable State of Federal law.

7CC. The following clauses are incorporated by reference: The full text of these clauses can be found in Standard Space Lease Form via the Internet at http://fast.faa.gov

- PROTEST (11/03)
- PAYMENT BY ELECTRONIC FUND TRANSFER (OCT-06)
- CENTRAL CONTRACTOR REGISTRATION-REAL PROPERTY (Oct-06)

Section 3 - Closing

NOTICES -

All notices/correspondence shall be in writing, reference the lease number and be addressed as follows:

Lessor:
Wichita Airport Authority
2173 South Air Cargo Road
Wichita, KS 67209

Government:
Federal Aviation Administration
Real Estate and Utilities Branch, ASW-53
2601 Meacham Boulevard
Fort Worth, TX 76137

ATTACHMENTS -
See herein attached - Attachment A
Attachment B

IN WITNESS WHEREOF, the parties hereto have signed their names:

ATTEST:

THE WICHITA AIRPORT AUTHORITY
WICHITA, KANSAS

By: _____
Karen Sublett, City Clerk

By: _____
Carl Brewer, President
"LESSOR"

By: _____
Victor D. White, Director of Airports

APPROVED AS TO FORM: _____ Date: _____
Director of Law

THIS DOCUMENT IS NOT BINDING ON THE GOVERNMENT OF THE UNITED STATES OF AMERICA UNLESS SIGNED BELOW BY AUTHORIZED CONTRACTING OFFICER.		
NAME OF REAL ESTATE CONTRACTING OFFICER JAMES M. NELSON	SIGNATURE OF REAL ESTATE CONTRACTING OFFICER	DATE

ATTACHMENT A

Lease No: DTFACN- 12 - L - 00014

I. SECTION A - GENERAL BUILDING REQUIREMENTS AND SPECIFICATIONS

A1-Ceilings (10/96)

Must have acoustical treatment with a flame spread of 25 or less and smoke development rating of 50 or less.

A2-Doors (10/96)

Exterior doors shall be weather tight, equipped with cylinder locks and door checks, automatic door closures and open outward. The FAA will be furnished at least two master keys and two keys for each lock. Interior doors must be solid cord and at least 32 by 80 inches with a minimum opening of 32 inches and be of sturdy construction. Fire doors shall conform to NFPA Standard No. 80. As designated by the FAA, doors shall be equipped with non-removable hinge pins, and "Best" locks with 7-pin removable cores. The FAA shall provide cores.

A3-Floor Load (8/02)

All adjoining floor areas shall be 1) of a common level not varying more than 1/4 inch over a 10-foot, 0-inch horizontal run in accordance with the American Concrete Institute standards, 2) non-slip, and 3) acceptable to the Real Estate Contracting Officer. Under floor surfaces shall be smooth and level. Office areas shall have a minimum live load capacity of 50 pounds per square foot plus 20 pounds per square foot for moveable partitions. Storage areas shall have a minimum live load capacity of 100 pounds per square foot including moveable partitions. A report showing the floor load capacity, at no cost to the Government, by a registered professional engineer may be required by the Contracting Officer.

A4-General Health and Safety Standards (8/02)

Local Health, Environmental (OSHA and EPA), and Safety Standards and Building Codes shall be complied with when accomplishing any cleaning, construction, renovation, remodeling, maintenance or testing done in the leased space and areas connected to or integrated with the leased space. Whenever FAA Standards require work processes or precautions to be provided, the Lessor shall coordinate with the FAA during the work so that proper requirements are met.

A5-HVAC (10/96)

Heating, ventilation and air-conditioning systems are required which maintain a temperature range of 68-72 degrees Fahrenheit year-round. These temperatures must be maintained throughout the leased premises and service areas regardless of outside temperatures during

hours of operation. For further information see ASHRAE standard ANSI/ ANSI/ASHRAE 62-1999 - Ventilation for Acceptable Indoor Air Quality.

A6-Lighting (10/96)

Modern, diffused, energy efficient (T-8 or better) fluorescent fixtures shall be provided maintaining a uniform lighting level of 50 foot candles at working surfaces. Emergency lighting must provide at least 0.5 foot candles of illumination throughout the exit path, including exit access routes, exit stairways, or other routes such as passageways to the outside of the building.

A7-Parking (10/06)

At no additional cost to the FAA, the Lessor shall provide restricted parking for 75 reserved off-street parking spaces located 1801 Airport Road, Wichita, Kansas. The Lessor shall maintain the parking areas in good repair and provide snow and ice removal.

A8- Aircraft Parking

The Lessor agrees the Government's Flight Standards District Office (FSDO), during its tenancy in said building, shall have the right to use three parking spaces on the ramp area at Wichita Mid-Continental Airport (the concrete squares extending north and south, immediately adjacent and east of the tie-down area concrete square, east of the hangar designated as 1880), for parking of aircraft of examinees receiving flight tests, examinations or inspections, at no additional cost to the Government. The Lessor agrees to remark all three aircraft parking spaces with "FAA FSDO Use Only at All Times" for identification by examinees no later than December 30, 2011. This right shall terminate upon date the FAA's FSDO is relocated to other building quarters on or off the Wichita Mid-Continental Airport.

A9- Prior Notification (8/02)

A pre-construction meeting shall be held at the facility prior to the commencement of any cleaning, construction, renovation, remodeling, repair, maintenance or testing within the leased premises and areas connected to or integrated with the leased premises. If any items on the checklist are questionable or undone, full resolution of the issues will be expected before the project starts. The pre-construction meeting will be planned, scheduled, and coordinated, with the Government's supervisor or manager responsible for the facility, at least one week before the execution of the work.

A10-Restrooms and Drinking Fountains (7/09)

Separate toilet facilities for men and women shall be provided on each floor where the FAA leases space. Water closets and urinals shall not be visible when the exterior door is open. Each toilet room shall contain toilet paper dispensers, soap dispensers, paper towel dispensers, waste receptacles; a coin operated sanitary napkin dispenser with receptacle for each women's toilet, disposable toilet seat cover dispensers, a convenience outlet, and hot and cold water for

all restrooms. (The FAA will advise if additional facilities are required.). The Lessor shall provide a minimum of one chilled accessible drinking fountain with potable water within every 200 feet of travel.

A11-Window and Floor Covering (8/02)

All exterior windows shall be equipped with window covering. Floors will be carpeted with a commercial grade of carpet acceptable to the FAA. Existing floor and window covering may be accepted at the discretion of the Real Estate Contracting Officer however, prior to occupancy all carpeting and window covering shall be cleaned.

At no additional cost to the FAA, the Lessor shall replace carpeting at least every eight (8) years during FAA occupancy or any time during the lease when:

- Backing or underlayment is exposed
- There are noticeable variations in surface color or texture

Replacement includes moving and return of furniture.

II. SECTION B - SERVICES, UTILITIES, AND MAINTENANCE

B1-Grounds Maintenance (10/96)

The Lessor shall maintain in good condition landscape plants and lawns. The Lessor shall also remove snow and ice from the entrances, exterior walks and parking areas around the premises, prior to and during the Government's normal operating hours.

B2-Pest Control (8/02)

The Lessor shall exterminate and control pests within the premises within a timely manner as required by the Government. Notice shall be provided to the users of the building before any application of herbicide(s)/pesticide(s) or other chemical pest control. OSHA requirements for Hazard Communication shall apply for the use of hazardous materials used in pest control. Copies of Material Safety Data Sheets (MSDS) for all chemicals applied shall be provided to the FAA before application. Only licensed applicators shall be allowed to apply chemicals. Herbicides/pesticides are not to be applied near the outside air intakes of the building during normal working hours and when the system is in operation.

B3-Services and Facilities (10/96)

The Lessor shall provide to the Government, as part of the rental consideration, the following:

- Heating, air conditioning, and ventilation that provide for the comfortable occupancy of the premises. Temperatures will be thermostatically controlled to maintain a temperature of 68 - 72 degrees Fahrenheit. These temperatures must be maintained

throughout the leased premises and service areas, regardless of outside temperatures, during the FAA's normal hours of operation.

- Electrical power to the premises for the operation of lights, communications equipment, and office machines.
- Water (hot and cold) and sewer to leased premises.
- Trash removal for leased premises.

III. SECTION C - SAFETY AND FIRE PREVENTION

C1-Fire and Safety Requirements (8/02)

All NFPA Standards addressed in this section reference the current edition of NFPA in place at the signing of this contract. At any point when construction takes place, systems should be brought into compliance according to the current edition of NFPA. The building shall, as required by Code, be equipped with automatic sprinklers which conform to NFPA No. 13, be maintained in accordance with NFPA No. 13A, have electrically supervised control valves (NFPA No. 13), and have water-flow alarm switches connected to automatically notify the local fire department (NFPA No. 72) or central station (NFPA No. 71). The notification of the fire department or central station shall be accomplished through the building fire alarm system. Regardless of code requirements when the leased space (including garage areas under lease by the FAA) is on the 6th floor and above, or below grade, sprinklers are required.

A manual fire alarm system shall be provided, maintained, and tested by the lessor in accordance with NFPA Standard No. 71 and 72 in buildings, which are three (3) or more stories in height or contain more than 50,000 square feet gross floor area. The fire alarm system wiring and equipment must be electrically supervised and automatically notify the local fire department and conform to NFPA Standards No. 70 and 72. Engineered smoke control systems, if present, shall be maintained in accordance with the manufacturer's recommendations.

Fire-safety, equivalent to the requirements stated above in this clause, may be accepted, at the discretion of the Real Estate Contracting Officer, if certified by a Licensed Fire Protection Engineer.

Portable fire extinguishers shall be provided, inspected, and maintained by the lessor in accordance with NFPA Standard No.10.

C2-Halon (8/02)

Wherever halon is used in a facility as a fire extinguishing system, the Lessor shall comply with all NFPA standards regarding use of and safety requirements for the use of halon.

C3-Indoor Air Quality (8/02)

The Lessor shall control contaminants at the source and/or operate the space in such a manner that the indicator levels for carbon monoxide (CO), carbon dioxide (CO2), and formaldehyde

(HCHO), are not exceeded. The indicator levels for office area are as follows: CO-9 parts per million (PPM) time weighted average (TWA - 8-hour sample); CO2 - 1,000 PPM (TWA); HCHO - 0.1 PPM (TWA). All indoor air contaminant levels in leased space will be kept below appropriate OSHA regulations or Consensus standards, whichever is stricter. Air quality and facility cleaning will be adequate to prevent the growth of mold, mildew and bacteria. Any visual evidence of these will require immediate sampling and remediation. Moisture/standing water will be controlled to prevent the growth of these.

During working hours, ventilation shall be provided in accordance with the latest edition of ANSI/ASHRAE Standard 62, *Ventilation for Acceptable Indoor Air Quality.*

The Lessor shall promptly investigate indoor air quality (IAQ) complaints and shall implement controls including alteration of building operating procedures (e.g., adjusting air intakes, adjusting air distribution, cleaning and maintaining HVAC, etc.). The FAA is responsible for addressing IAQ problems resulting from its own activities.

MSDS will be provided for all cleaning solutions used in the FAA spaces.

C4-OSHA Requirements (10/96)

The Lessor shall provide space, services, equipment, and conditions that comply with Occupational Safety and Health Administration (OSHA) safety and Health standards (29 CFR 1910 and 1926).

C5-Radon (10/96)

Radon levels in space leased to the FAA shall not equal or exceed the EPA action level for buildings of four (4) picocuries per liter (pCi/L). If radon levels are found to be at or above 4 pCi/L, the Lessor shall develop and promptly implement a plan of corrective action.

C6-Refrigerants (8/02)

The Lessor shall identify which refrigerants are used in the HVAC systems in the spaces covered by this lease. The lease should provide for use of refrigerants consistent with EPA and ASHRAE requirements.

C7-Warranty of Space (8/02)

(a) Notwithstanding inspection and acceptance by the Government or any provision concerning the conclusiveness thereof, the Lessor warrants that all space leased to the Government under this contract, spaces above suspended ceilings in the leased space, air plenums elsewhere in the building which service the leased space, engineering spaces in the same ventilation zone as the leased space, public spaces and common use space (e.g., lobbies, hallways) will, at the time of acceptance and during the term of the lease contract, comply with the asbestos containing material (ACM) and polychlorinated biphenyl (PCB) requirements of the Toxic Substance Control Act. The

Real Estate Contracting Officer shall notify the Lessor in writing, within 30 days after the discovery, of any failure to comply with the asbestos requirement. With any construction work, lessor would be required to comply with the OSHA regulations for Asbestos and relevant FAA orders.

(b) The leased premises shall be free of all asbestos-containing material, PCB's, Radon, and other environmentally hazardous substances. If either ACMs or PCBs are found to be in the leased space the Government reserves the right to require the Lessor, at no cost to the GOVERNMENT, to take whatever corrective action as might be required by the Toxic Substance Control Act, EPA regulations and state requirements. All facilities constructed prior to 1981 are to have an asbestos building survey conducted by a qualified inspector including a visual examination and bulk sampling. All ACM survey reports are to be made available to the Real Estate Contracting Officer.

(c) If the Lessor fails, after receipt of notice, to make correction within the specified period of time, the Government shall have the right to make correction and charge to the Lessor the costs occasioned to the FAA or terminate the lease agreement at no cost to the Government.

(d) The rights and remedies of the FAA in this clause are in addition to any other rights and remedies provided by the law and under this contract.

(e) Definitions.

- (1) "Acceptance", as used in this clause means the act of an authorized representative of the Government by which the Government assumes for itself, or as an agent of another, the leased premises as ready for occupancy or approves a portion of the premises for occupancy in accordance with the provisions of this lease contract.
- (2) "Correction", as used in this clause, means (i) the removal, encapsulation or enclosure of any friable asbestos materials found in the space leased to the Government, spaces above suspended ceilings in the leased space, air plenums elsewhere in the building which service the leased space, public spaces, engineering spaces in the same ventilation zone as the leased space and common use space (e.g., lobbies, hallways). Following such abatement actions, the Lessor shall adhere to the FAA's required post-asbestos-abatement air monitoring program. (ii) With regard to non-friable asbestos materials in good condition, it means the establishment and execution of a special operations and maintenance program and an abatement plan, approved by the Government, to be implemented from the time the materials are discovered through the remainder of the lease term, and (iii) with regard to PCBs, it involves the removal or retrofitting, in accordance with EPA regulations, of any PCB equipment present in the building.

IV. SECTION D – MISCELLANEOUS

D1-Adjustment for Vacant Premises (10/96)

If the Government fails to occupy any portion of the leased premises or vacates the premises in whole or in part prior to expiration of the firm term of the lease, the rental rate shall be reduced as follows: The rate shall be reduced by that portion of the costs per square foot of operating expenses not required to maintain the space. Said reduction shall occur after the Government gives 30 days prior notice to the Lessor, and shall continue in effect until the Government occupies the premises or the lease expires or is terminated.

D2 - Condition Report (10/96)

A joint physical survey and inspection report of the demised premises will be made as of the effective date of this lease, reflecting the then present condition, and will be signed on behalf of the parties hereto.

D3-Holdover

If after the expiration of the lease, the Government shall retain possession of the premises, the lease shall continue in force and effect on a month-to-month basis. Rent shall be paid in accordance with the terms of the lease, in arrears on a prorated basis, at the rate paid during the lease term. This period shall continue until the Government shall have signed a new lease with the Lessor, acquired the property in fee or vacated the leased premises.

D4 - Display Advertising (10/96)

If the leased premises are solely for Government use, no advertising matter shall be constructed on or over the premises, unless authorized by the Real Estate Contracting Officer.

D5 - Erection of Signs (10/96)

Upon notice to the Lessor, the Government shall have the right to erect on or attach to the Lessor's premises such signs as may be required to clearly identify the Government's facility. Said signs so erected will remain the property of the Government and shall be removed from the premises upon termination of the Lease.

D6 - Hold Harmless (10/96)

In accordance with and subject to the conditions, limitations and exceptions set forth in the Federal Tort Claims Act of 1948, as amended (28 USC 2671 et. seq.), hereafter termed "the Act" the Government will be liable to persons damaged by any personal injury, death or injury to or loss of property, which is caused by a negligent or wrongful act or omission of an employee of the Government while acting within the scope of his office or employment under circumstances where a private person would be liable in accordance with the law of the place where the act or omission occurred. The foregoing shall not be deemed to extend the

Government's liability beyond that existing under the Act at the time of such act or omission or to preclude the Government from using any defense available in law or equity.

D7 - If Minimum Not Delivered (10/96)

If delivered space contains less than the minimum square footage, the Government may cancel the lease. If such cancellation occurs, the Government may exercise it's legal rights including charging the Lessor and its surety the increased cost of providing replacement space.

D8-Installation of Antennas, Cables And Other Appurtenances (10/96)

Upon notice to the Lessor, the FAA shall have the right to install, operate and maintain antennas, wires and their supporting structures including any linking wires, connecting cables and conduits atop and within buildings and structures, or at other locations, as deemed necessary by the Government.

D9 - Interest for Late Payments (10/96)

If requested from the Lessor, the Government will pay an interest penalty when payment is not made within 60 days of the due date.

Payment shall be considered as being made on the day a check is dated or an electronic funds transfer is made. All days referred to in this clause are calendar days, unless otherwise specified. Rent shall be paid monthly in arrears and will be due on the first workday of each month and only as provided for by the lease.

The interest penalty shall be at the rate established by the Secretary of the Treasury under Section 12 of the Contract Disputes Act of 1978 (41 U.S.C. 611) that is in effect on the day after the due date. This rate is referred to as the "Renegotiation Board Interest Rate," and it is published in the Federal Register semiannually on or about January 1 and July 1. Interest penalties of less than $1.00 need not be paid.

Interest penalties will not be paid on delays due to disagreement between the Government and Lessor over the payment amount, requests for additional information or other issues involving contract compliance or on amounts temporally withheld or retain in accordance with the terms of the contract.

Payments other than rent, the Lessor shall prepare and submit an invoice to the designated billing office after completion of the work. An invoice shall include the following items:

(i) Name and address of the Lessor.
(ii) Invoice date.
(iii) Lease Number
(iv) Government's order number or other authorization.
(v) Description, price, and quantity of work or services delivered.

(vi) Name and address of Contractor official to whom payment is to be sent

D10 - Janitorial Services (10/96)

The Lessor shall maintain the leased premises, including outside areas in a clean condition. The Lessor shall provide the labor, materials, equipment and supervision necessary for that servicing. Listed below are the janitorial services to be provided and the frequency of those services.

Daily:

a. Sweep floors using chemically treated absorbent or dusting tools (such as DEX or equal).
b. Vacuum carpeted areas, as needed.
c. Empty waste baskets and containers; dispose of waste paper, trash, and other extraneous materials.
d. Wash all drinking fountains.
e. Refill hand sanitizer dispensers in common areas, where applicable.
f. In the restrooms:
1. Clean restroom fixtures and chrome fittings.
2. Clean and refill all dispensers (including deodorant material).
3. Wet mop restroom floors.
4. Sanitize toilets, toilet seats, and urinals.
5. Spot wash walls, partitions, and doors.

2. Weekly:

a. Dust counters, file cabinets, and telephones, and surfaces of all office furniture, fixtures, and window sills (except desk tops).

3. Monthly:

a. Wash waste baskets.
b. Damp mop and buff all non-carpeted floors; wax and buff non-carpeted floors.
c. Clean or wash walls as needed to present a neat appearance.
d. Dust all ledges and flat surfaces within reach.
e. Dust and clean all light fixtures.
f. Dust and clean all venetian blinds.
g. Wash restroom walls, partitions and doors.

4. Annually:

a. Strip old wax from all floor space and rewax. This service is to be performed in conjunction with one of the quarterly cleaning schedules.
b. Shampoo all carpeted floors.

D11 - Measurement for Payment (10/96)

The space will be mutually measured upon delivery. Payment will be made on the basis of actual measurement; however, payment will not be made for delivered space, which is in excess of the maximum square footage solicited.

D12 - Non-Restoration (10/96)

The FAA shall have no obligation to restore and/or rehabilitate, either wholly or partially, the premises under this lease. It is further agreed that the FAA may abandon in place any or all of the structures, improvements and/or equipment installed in or located upon said property by the FAA during its tenure. Notice of abandonment will be conveyed to the Lessor in writing.

D13 – Occupancy Permit (8/02) - The premises offered shall have a valid Occupancy Permit, issued by the local jurisdiction, for the intended use of the Government, or the Offeror shall complete and provide a certified copy of "FAA Safety & Environmental Checklist " form, in lieu of an occupancy permit, at the contracting officer's discretion. The leased premises, all accesses to the leased premises, building operations, equipment, services, or utilities furnished by the Lessor, and activities of other occupants, shall be free of safety, health, and fire hazards. When such hazards are detected, they must be promptly corrected at the Lessor's expense.

D14-Unauthorized Negotiating (10/96)

In no event shall the Lessor enter into negotiations concerning the space leased or to be leased with other than the real estate contracting officer or his designee.

D15 - Operating Costs Escalator (10/96)

Beginning with the second year of the lease and each year after, Government shall pay adjusted rent for changes in costs for cleaning services, supplies, materials, maintenance, trash removal, landscaping, water, sewer charges, heating, electricity, and certain administrative expenses attributable to occupancy.

The amount shall be determined by multiplying the total first year's estimated costs of these items, as negotiated and established prior to the lease award, by the percent of change in the cost of living index from the base figure. The base figure shall be the index figure published for the month prior to the lease commencement date. The percent change shall be computed by comparing the base figure with the index figure published for the month, which begins each successive 12-month period. For example, a lease which commences in June of 1981 would have as the base figure the index published for May of 1981, and that figure would be compared with the index published for May of 1982, May of 1983, and so on, to determine the percent change. The U.S. Department of Labor Revised Consumer Price Index shall measure the cost of living index for Wage Earners and Clerical Workers, U.S. City Average, All Items figure, (1967=100) published by the Bureau of Labor Statistics. Payment shall be made with the monthly installment of fixed rent.

Rental adjustments shall be effective on the anniversary date of the lease. Payment of the adjusted rental rate shall become due on the first workday of the second month following the publication of the cost of living index for the month prior to the lease commencement date.

If Government exercises an option to extend the lease term at the same rate as that of the original term, the option price shall be based on the adjustments during the original term. Annual adjustments will continue.

In the event of any decreases in the cost of living index occurring during the term of occupancy under the lease, the rental amount will be reduced accordingly. The amount of any such reductions will be determined in the same manner as increases in rent provided under this clause.

The base for the operating costs adjustment will be:
Utilities: $1.46 psf
Janitorial: $0.97 psf

D16-Wiring for Telephones (10/96)

The Government reserves the right to provide its own telephone service in the space to be leased. It may have inside wiring and telephone equipment installed by the local telephone company or a private contractor. Alternately, the FAA may wish to consider using inside wiring provided by the building, if available. However, the final decision will remain the Government.

SECURITY REQUIREMENTS

E-1. Facility Security (Updated 4/09)

Security requirements for Government occupied space must meet minimum-security accreditation standards for the type of facility covered by this lease. The FAA Facility Security Management Program defines facility security accreditation standard levels. The security requirements identified below are tailored specifically for the type of facility covered by this solicitation. The Lessor shall provide or make accommodation to provide for all the security requirements listed herein for the leased premises covered by this lease agreement:

Contact your local Servicing Security Element (SSE) at (816) 329-3701 for a list of your security requirements.

The local SSE will determine any additional security upgrades that are required to meet accreditation and shall conduct a final security assessment of the building. The Lessor shall provide maintenance services to the security upgrades installed within the leased premises and covered under this lease.

E-2. Contractor Personnel Suitability Requirements (4/09)

(a) This clause applies to the extent that this contract requires contractor employees, subcontractors, or consultants to have unescorted access to FAA:

(1) Facilities;
(2) Sensitive information; and/or;
(3) Resources regardless of the location where such access occurs, and none of the exceptions of FAA Order 1600.72A, Contractor and Industrial Security Program, Chapter 5, paragraphs 4, 6, 7 and 8 pertains.
Definitions of applicable terminology are contained in the corresponding guidance and FAA Order 1600.72A, appendix A.

(b) Consistent with FAA Order 1600.72A, the FAA Servicing Security Element (SSE) has approved designated risk levels for the positions under the contract.

(c) If a National Agency Check with Inquiries (NACI) or other investigation is required under paragraph (b) for a given position, the contractor will submit to the Contracting Officer (CO) a point of contact (POC) that will enter applicant data into the Vendor Applicant Process (VAP) system (vap.faa.gov). VAP is a FAA system used to process and manage security information for FAA contractor personnel. Each contract may have up to 5 POCs. Once designated, a VAP administrator will provide each POC a Web ID and password.
The type of investigation conducted will be determined by the position risk level designation for all duties, functions, and/or tasks performed and will serve as the basis for granting a favorable employment suitability authorization as described in FAA Order 1600.72A. If an employee has had a previous U. S. Government conducted background investigation which meets the requirements of Chapter 5 of FAA Order 1600.72A and Homeland Security Presidential Directive 12 (HSPD-12), it will be accepted by the FAA. However, the FAA reserves the right to conduct further investigations, if necessary. The contract may include positions that are temporary, seasonal, or under escort only. In such cases, a FAA Form 1600-77 for each specific position will be established as the investigative requirements may differ from the NACI.

The following information must be entered into VAP by the POC for each applicant requiring an investigation:

- Name;
- Date and place of birth (city and state);
- Social Security Number (SSN);
- Position and office location;
- Contract number;
- Current e-mail address and telephone number (personal or work); and
- Any known information regarding current security clearance or previous investigations (e.g. the name of the investigating entity, type of background

investigation conducted, contract number, labor category (Position), and approximate date the previous background investigation was completed).

If a prior investigation exists and there has not been a 2 year break in service by the applicant, the SSE will notify the contractor that no investigation is required and that final suitability is approved.

If no previous investigation exists, the SSE will send the applicant an e-mail (this step may be delegated to VAP POC):

- Stating that no previous investigation exists and the applicant must complete a form through the Electronic Questionnaires for Investigations Processing (eQIP) system
- Instructing the applicant how to enter and complete the eQIP form;
- Providing where to send/fax signature and release pages and other applicable forms; and
- Providing instructions regarding fingerprinting.

The applicant must complete the eQIP form and submit other required material within 15 days of receiving the e-mail from the SSE.

For items to be submitted outside eQIP, the contractor must submit the required information with a transmittal letter referencing the contract number to:

Headquarters Contracts:
Manager, Personnel Security Division, AIN-400
800 Independence Avenue, S.W., Room 315
Washington, D.C. 20591

Regional and Center Contracts:

Department of Transportation
Federal Aviation Administration
Security and Hazardous Material, ACH-001
2601 Meacham Boulevard
Fort Worth, TX 76137

The transmittal letter must also include a list of all of the names of contractor employees and their positions for which completed forms will be submitted to the SSE pursuant to this Clause.

(d) The contractor must submit the information required by paragraph (c) of this Clause for any new employee not listed in the Contractor's initial submission who is hired into any position identified in paragraph (b) of this Clause.

(e) The CO will provide notice to the contractor when any contractor employee is found to be unsuitable or otherwise objectionable, or whose conduct appears contrary to the public interest, or inconsistent with the best interest of national security. The contractor must take appropriate action, including the removal of such employee from working on this FAA contract, at their own expense. Once action has been taken, the contractor will report the action to the CO and SSE.

(f) No contractor employee will work in a high, moderate, or low risk position unless the SSE has received all forms necessary to conduct any required investigation and has authorized the contractor employee to begin work.

(g) The contractor must notify the CO within one (1) business day after any employee identified pursuant to paragraph (c) of this Clause is terminated from performance on the contract. This notification must be done utilizing the Removal Entry Screen of VAP. If FAA issued the terminated employee and identification card, the contractor must collect the card and submit it to the SSE.

(h) The CO may also, after coordination with the SSE and other security specialists, require contractor employees to submit any other security information (including additional fingerprinting) deemed reasonably necessary to protect the interests of the FAA. In this event, the contractor must provide, or cause each of its employees to provide, such security information to the SSE, and the same transmittal letter requirements of paragraph (c) of this Clause applies.

(i) The contractor and/or subcontractor(s) must contact the Servicing Security Elements (Regional and/or Center Security Divisions) or AIN-400 at Headquarters within one (1) business day in the event an employee is arrested (detained by law enforcement for any offenses, other than minor traffic offenses) or is involved in theft of government property or the contractor becomes aware of any information that may raise a question about the suitability of a contractor employee.

(j) Failure to submit information required by this clause within the time required may be determined by the CO a material breach of the contract.

(k) If subsequent to the effective date of this contract, the security classification or security requirements under this contract are changed by the Government and if the changes cause an increase or decrease in direct contract costs or otherwise affect any other term or condition of this contract, the contract will be subject to an equitable adjustment.

(l) The contractor agrees to insert terms that conform substantially to the language of this clause, including paragraph (k) but excluding any reference to the Changes clause of this contract, in all subcontracts under this contract that involve access and where the exceptions under Chapter 5, FAA Order 1600.72A do not apply.

(m) Contractor employees who have not undergone a background investigation must be escorted at all times. In some instances, a contractor employee may be required to serve as an escort. To serve as an escort, a contractor employee must have a favorably adjudicated fingerprint check and initiated a NACI with FAA.

VI. SECTION F - SPECIAL REQUIREMENTS n/a

VII. CERTIFICATION FORMS (8/02) -

See attached forms:
ABBAS Compliance Report

ATTACHMENT B

Lease No. DTFACN-12-L-00014

BUILDING IMPROVEMENTS

1.The Lessor shall submit to the Government a Remodel Study that includes Scope of Work, Schedule and Floor Plans for all work associated with required building improvements/repairs to prepare the premises with all due diligence. Any costs incurred for the completion of the Remodel Study and the associated building improvements noted in the Remodel Study are the responsibility of the Lessor. The Government agrees to work cooperatively and in good faith with the Lessor in development of the Remodel Study to minimize any delays. Approvals of the Remodel Study by the Government shall not be unreasonably withheld. The Remodel Study shall be completed and submitted to the Government no later than **March 31, 2012**. The scope of work shall include the following:

a. REPLACEMENT OF CARPET IN LEASED PREMISES –The Remodel Study shall include replacement of all existing carpet in the leased premises with a commercial grade of carpet acceptable to the Government and shall include moving and return of furniture. The Government will arrange for moving of any IT equipment.

b. REPLACEMENT OF ALL WALL COVERINGS –The Remodel Study shall include replacement of all existing wall coverings in the leased premises and shall include moving and return of furniture. The Government will arrange for moving of any IT equipment.

c. REPLACEMENT OF DAMAGED CEILING TILES –The Remodel Study shall include replacement of any and all damaged ceiling tiles in the leased premises and shall include moving and return of furniture. The Government will arrange for moving of any IT equipment.

d. INTERIOR PAINTING OF LEASED PREMISES –The Remodel Study shall include repainting interior existing painted surfaces of the leased premises, including any existing partitioning installed by the Government or Lessor after Government occupancy, utilizing a non-lead based, washable paint in colors acceptable to the Government and shall include moving and return of furniture. The Government will arrange for moving of any IT equipment.

After March 31, 2012, all existing painted surfaces shall be repainted with non-lead based, washable paint in colors acceptable to the Government at least every 5 years. Work shall be done at Lessor's expense. This includes moving and return of furniture. The Government will arrange for moving of any IT equipment.

The Real Estate Contracting Officer or designated representative shall approve the scope of work within 45 days of receipt (May 15, 2012). The Lessor shall begin work on the leased premises within 90 (August 13, 2012 or sooner) days of approval by the Real Estate Contracting Officer (RECO).

Should circumstances arise that are beyond the Lessor's control, which would delay completion and/or submission of the scope of work by March 31, 2012, Lessor shall provide written notice to the RECO no later than February 29, 2012 requesting an extension. Approval of the extension shall not be unreasonably withheld by the RECO. Should an extension be granted, all subsequent dates would be adjusted accordingly.

2. FACILITY RESTROOMS – The Remodel Study shall include specifications and cost estimates for the replacement of all existing stalls, existing fixtures, existing countertops and existing exhaust fans as well as installation of new sanitary hand dryers in every restroom in the leased premises. The Remodel Study shall also provide specifications and cost estimates to bring one men's restroom and one women's restroom in the leased premises in compliance with the Architectural Barriers Act Accessibility Standards (ABAAS). The parties shall negotiate a supplemental lease agreement to establish the scope of work for said renovations to facility restrooms to be performed by the Lessor as part of this lease.

EXHIBIT A

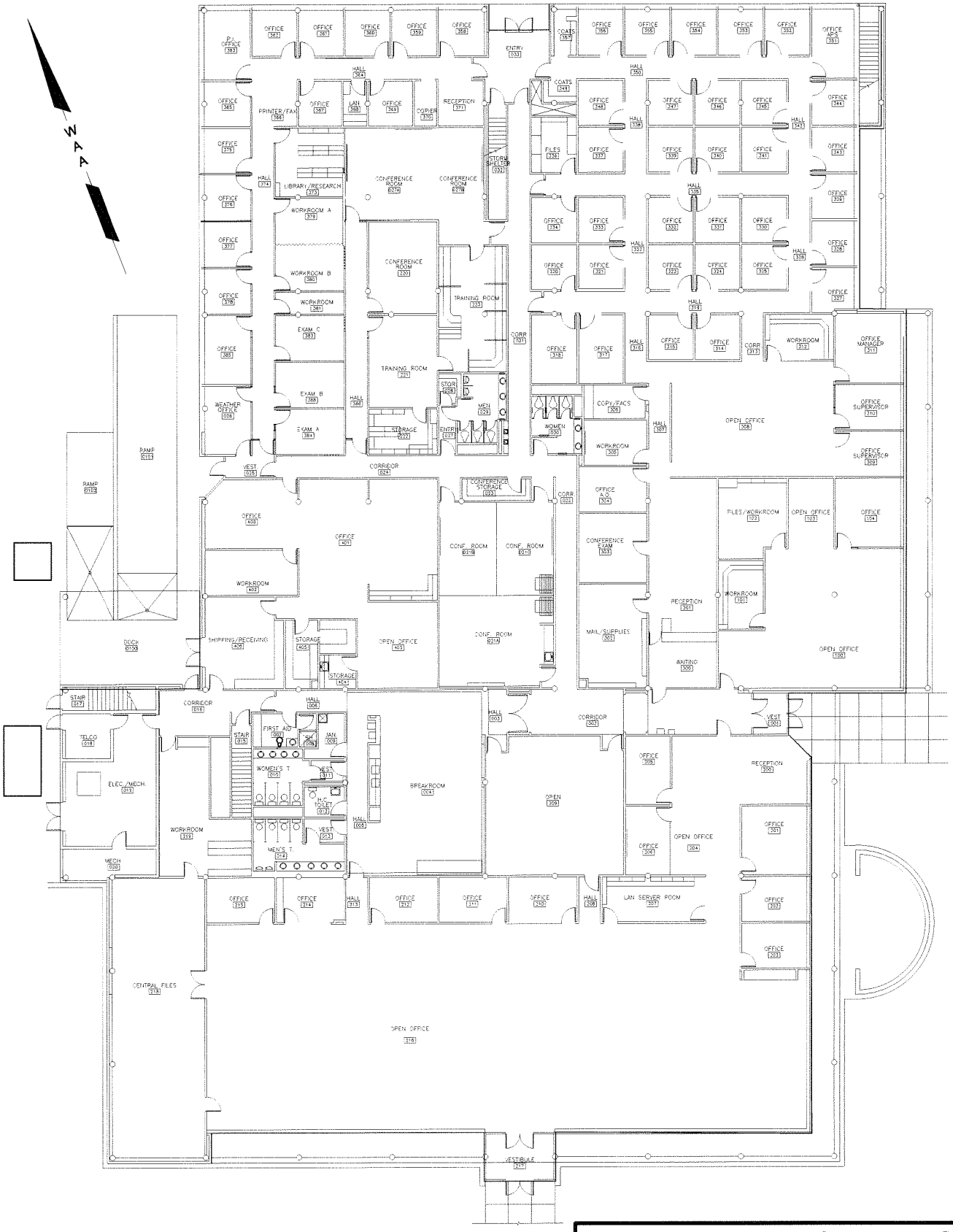

SQUARE FOOT TOTALS

39,372	MAIN LEVEL
4,459	NORTH BASEMENT
2,603	SOUTH BASEMENT
2,114	STORAGE BUILDING, GROUND FLOOR - NOT SHOWN
1,139	STORAGE BUILDING, MEZZANZINE - NOT SHOWN
49,687	**TOTAL BUILDING**

MAIN LEVEL PLAN

1801 AIRPORT ROAD

WICHITA MID-CONTINENT AIRPORT

THE WICHITA AIRPORT AUTHORITY
WICHITA, KANSAS

DATE	DR. BY	SCALE	SHEET
8/29/11	H.G.O.	1" = 30'	1 of 2

EXHIBIT A

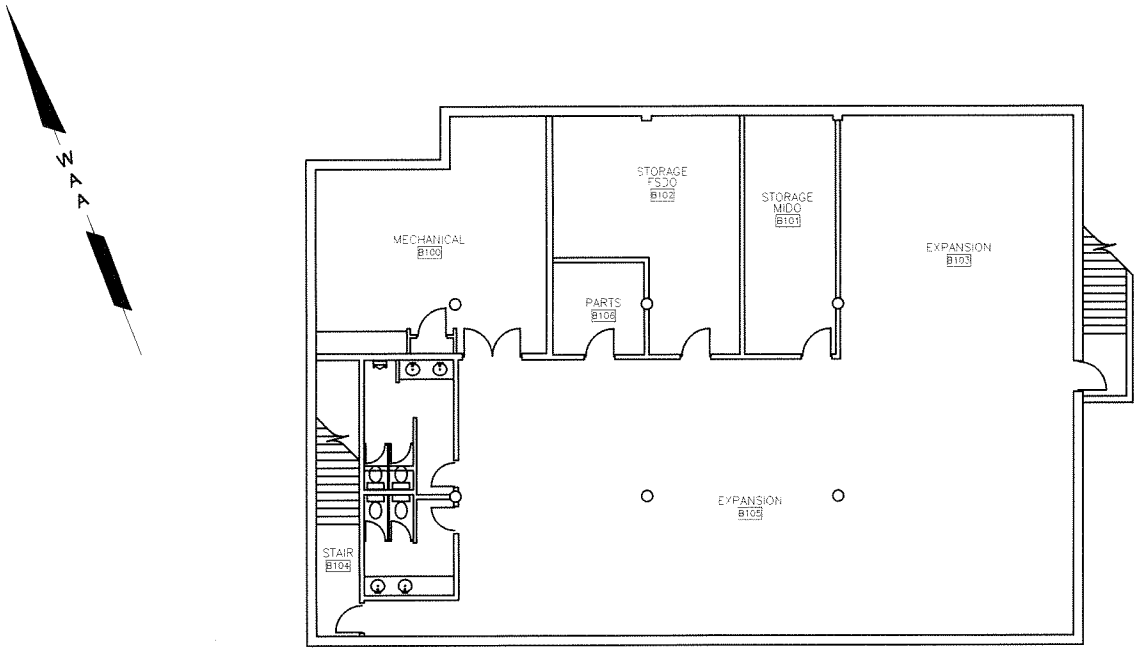

NORTH BASEMENT

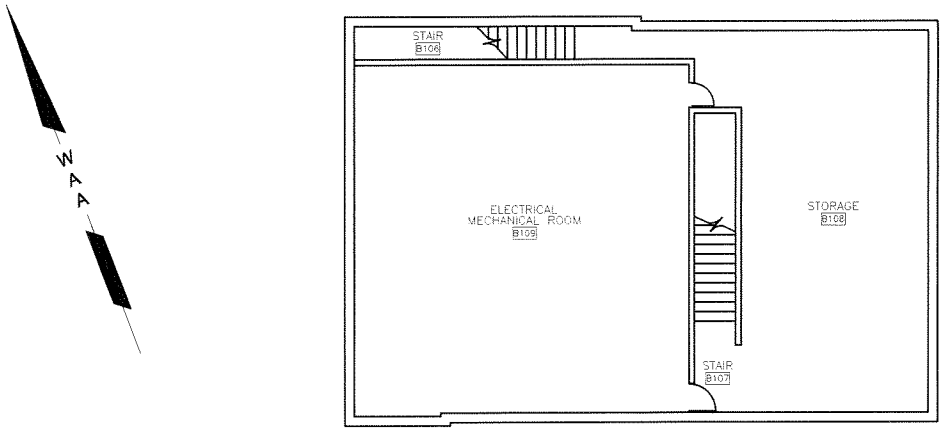

SOUTH BASEMENT

1801 AIRPORT ROAD

WICHITA MID-CONTINENT AIRPORT

THE WICHITA AIRPORT AUTHORITY
WICHITA, KANSAS

DATE	DR. BY	SCALE	SHEET
8/29/11	H.G.O.	1" = 20'	2 of 2

MUNICIPAL CERTIFICATE

If agreement is made with State, County, Municipality or other Public Authority, the following certificate shall be executed by an authorized official:

I, _____, certify that I am the _____ of the
(Name) *(Title)*

Owner named in the foregoing agreement: that _____
(Name of Person Executing Lease)
who signed said agreement on behalf of said Public Authority and was then

_____ of that Public Authority and said agreement was duly
(Executing Person's Title)
signed for and in behalf of said _____ by authority of its governing body, and is

within the scope of its powers.

Signed: _____

(Authority Seal)

ABAAS COMPLIANCE REPORT

The Lessor and the FAA are committed to compliance with the Architectural Barriers Act and Rehabilitation Act as detailed in the Architectural Barriers Act Accessibility Standard (ABAAS), which impacts the building and premises at 1801 Airport Road, Wichita, KS 67209.

Complete This Section:

____Leased building and premises are fully compliant with ABAAS section F202.6.

OR

____Where building design or construction was funded or controlled by federal government, leased building and premises are fully compliant with ABAAS – For post 5/8/2006 construction only.

OR

_____ Leased building and premises will be compliant with ABAAS by _____(date).

(Insert specific details on the improvements that are to be made)

OR

Building and premises are exempt from ABAAS as described below.

_____ Facility is unmanned.

_____ ABAAS waiver from GSA Administrator on file.

___X_ Other (Explain using pertinent ABAAS exemption). - At such time that an inspection is performed by qualified personnel from AJW-24, the FAA determines what changes are to be implemented to bring the facility into compliance with ABAAS requirements. When the changes are identified, all costs to upgrade from ADA to ABAAS will be the responsibility of the FAA and will be coordinated with the Lessor to accomplish the necessary work.

ABAAS COMPLIANCE REPORT

IN WITNESS WHEREOF, the parties hereto have signed their names:

ATTEST:

THE WICHITA AIRPORT AUTHORITY
WICHITA, KANSAS

By: _____
Karen Sublett, City Clerk

By: _____
Carl Brewer, President
"LESSOR"

By: _____
Victor D. White, Director of Airports

APPROVED AS TO FORM: _____ Date: _____
Director of Law

FEDERAL AVIATION ADMINISTRATION

_____
James M. Nelson
Real Estate Contracting Officer

_____
Date

City of Wichita
City Council Meeting
September 13, 2011

TO: Wichita Airport Authority

SUBJECT: AOPA Insurance Agency, Inc.
Lease Agreement for Office Use of 1995 Midfield Road
Wichita Mid-Continent Airport

INITIATED BY: Department of Airports

AGENDA: Wichita Airport Authority (Consent)

Recommendation: Approve the Agreement.

Background: The Wichita Airport Authority (WAA) and the AON Group (AON) entered into a twenty-five year agreement in 1981 for the facility located at 1995 Midfield Road on Mid-Continent Airport. Since 2006, AON has subleased ninety percent of the facility to the AOPA Insurance Agency, Inc. (AOPA), an aviation insurance brokerage firm.

Analysis: The agreement between AON and WAA expires on August 31, 2011, and the AON staff has elected to not renew the agreement and will relocate to another location in Wichita. AOPA is now desirous of leasing the entire 17,634 sq. ft. facility situated on 80,509 sq. ft. of land. The initial term of the lease is five years with two, five-year option terms.

Financial Considerations: The facility rental rate is $4.97 per sq. ft. and the land rental rate is $0.3388. Therefore, the new combined annual revenue for facility rent and land rent to the WAA is $114,917. This amount reflects an annual increase of $42,083 that is new revenue to the WAA.

Goal Impact: The Airport's contribution to the Economic Vitality of Wichita is promoted through negotiating agreements which allow Mid-Continent's business partners to develop on the Airport, which in turn, generate rental income for the WAA and allows the Airport to continue its operation on a self-sustaining basis.

Legal Considerations: The Agreement has been approved as to form by the Law Department.

Recommendations/Actions: It is recommended that the Wichita Airport Authority approve the Agreement and authorize the necessary signatures.

Attachments: Agreement.

AGREEMENT

By and Between

WICHITA AIRPORT AUTHORITY
Wichita, Kansas

and

AOPA Insurance Agency, Inc.
A MARYLAND CORPORATION

for

Use of Land and Facility Agreement – 1995 Midfield Road
Wichita Mid-Continent Airport
Wichita, Kansas

THIS AGREEMENT is entered into this September 13, 2011, between THE WICHITA AIRPORT AUTHORITY, Wichita, Kansas (LESSOR) and AOPA Insurance Agency, Inc. (LESSEE).

WHEREAS, LESSOR is a governmental or quasi-governmental entity authorized under the laws of the State of Kansas to own and operate one or more airports, with full, lawful power and authority to enter into binding legal instruments by and through its governing body; and

WHEREAS, LESSOR owns, operates, regulates, administers, and maintains the campus of Wichita Mid-Continent Airport (Airport); and

WHEREAS, LESSEE is an entity authorized to operate in the State of Kansas that desires to lease real property commonly known as 1995 Midfield Road, Wichita, Kansas, the land and improvements defined below (Premises) on the campus of Wichita Mid-Continent Airport from LESSOR under the terms and conditions set forth below in this Use and Lease Agreement (Agreement).

NOW, THEREFORE, in consideration of the mutual promises and agreements herein set forth, LESSOR and LESSEE do hereby covenant and agree as follows:

1. PREMISES

LESSOR does hereby lease to LESSEE the Premises located at 1995 Midfield Road on Wichita Mid-Continent Airport, consisting of 17,634 square feet of improved building situated on 80,509 square feet of land, all referred to herein as the Premises, as outlined on Exhibit "A", attached hereto and made a part hereof.

2. INITIAL TERM

The Term of this Agreement shall commence on September 1, 2011, and shall continue for a period of five (5) years ("Initial Term"), with the Initial Term expiring on August 31, 2016, unless otherwise terminated under provisions agreed to herein.

3. OPTION TERM

This Agreement may be renewed for two, five-year periods ("Option Term"), with the last Option Term expiring on August 31, 2026, provided LESSEE is not in default hereunder beyond any applicable grace or cure periods in rental or other payments to LESSOR at the time such notice exercising the Option Term is given. If LESSEE chooses to exercise its option to renew, written notice shall be submitted to LESSOR no less than ninety (90) days prior to the expiration of the Initial Term. If LESSEE is in default of any obligation under this Agreement beyond the time periods expressly allowed in this Section, then any notice attempting to exercise the Option Term shall be void.

4. FACILITY RENT DURING INITIAL TERM

Upon commencement of this Agreement, LESSEE shall pay to LESSOR Facility Rent for the Premises located at 1995 Midfield Road containing 17,634 sq. ft. The parties hereby agree that the Facility Rent for the five (5) years of the Initial Term, effective September 1, 2011 through August 31, 2016 shall be set at $4.97 per square foot. This rental will result in an annual payment of $87,640.98 or $7,303.42 per month.

5. LAND RENT DURING INITIAL TERM

Upon commencement of this Agreement, LESSEE shall pay to LESSOR basic Land Rent for the Premises located at 1995 Midfield Road, containing 80,509 sq. ft. That rent shall be calculated as follows:

INITIAL TERM 1995 Midfield Road, 80,509 Sq. Ft.					
Years			Rate Per Sq. Ft.	Annual	Monthly
09/01/2011	-	08/31/2012	.3388	$27,276.45	$2,273.04
09/01/2012	-	08/31/2013	.3557	$28,637.05	$2,386.42
09/01/2013	-	08/31/2014	.3735	$30,070.11	$2,505.84
09/01/2014	-	08/31/2015	.3922	$31,575.63	$2,631.30
09/01/2015	-	08/31/2016	.4118	$33,153.61	$2,762.80

LESSEE shall pay to LESSOR in advance on the first day of each month, without demand or invoicing, rentals for LESSEE's leased Premises as set forth herein.

LESSEE shall pay to LESSOR in advance on the first day of each month, without demand or invoicing, for both facility rental and land rental for the Premises as set forth herein. In the event LESSEE fails to make payment within ten (10) days of the dates due as set forth in this Agreement, then LESSOR, may charge LESSEE a monthly service charge of twelve percent (12%) on an annual basis for any such overdue amount, unless a lesser sum is set as the maximum allowable under state statutes on any such overdue amount, plus reasonable attorneys' and administrative fees incurred by LESSOR in attempting to obtain payment.

6. FACILITY RENT DURING OPTION TERM

Each Option Term shall be for a five (5) year period to commence on September 1 and expire on August 31. The first Option Term shall commence on September 1, 2016. The second Option Term shall commence on September 1, 2021. Facility Rent during the Option Term periods, if exercised, shall be increased by the percentage change of the CPI-U over the previous five (5) years, except that the rent shall not be raised more than twenty percent (20%) or less than ten percent (10%) over the previous five (5) years.

7. LAND RENT DURING OPTION TERM

It is understood and agreed that basic Land Rent during the Option Term, if exercised, shall be as follows:

FIRST OPTION TERM 1995 Midfield Road, 80,509 Sq. Ft.					
Years			Rate Per Sq. Ft.	Annual	Monthly
09/01/2016	-	08/31/2017	.4324	$34,812.09	$2,901.01
09/01/2017	-	08/31/2018	.4540	$36,551.09	$3,045.92
09/01/2018	-	08/31/2019	.4767	$38,378.64	$3,198.22
09/01/2019	-	08/31/2020	.5005	$40,294.75	$3,357.90
09/01/2020	-	08/31/2021	.5255	$42,307.48	$3,525.62

SECOND OPTION TERM 1995 Midfield Road, 80,509 Sq. Ft.					
Years			Rate Per Sq. Ft.	Annual	Monthly
09/01/2021	-	08/31/2022	.5518	$44,424.87	$3,702.07
09/01/2022	-	08/31/2023	.5794	$46,646.91	$3,887.24
09/01/2023	-	08/31/2024	.6084	$48,981.68	$4,081.81
09/01/2024	-	08/31/2025	.6388	$51,429.15	$4,285.76
09/01/2025	-	08/31/2026	.6707	$53,997.39	$4,499.78

8. OTHER FEES AND CHARGES

It is understood and agreed by LESSEE that LESSOR may assess fees and charges to LESSEE according to rates established by LESSOR's Schedule of Fees and Charges. Such Schedule shall be amended from time to time by action of the LESSOR.

Any amounts due LESSOR from LESSEE for utility, maintenance, reimbursements, or other special charges will be paid by LESSEE within thirty (30) days of the date of the invoice.

9. PLACE OF PAYMENTS

LESSEE shall make all payments by check made payable to the Wichita Airport Authority, and all payments and reports shall be delivered or mailed to:

Wichita Airport Authority
2173 Air Cargo Road
Wichita, Kansas 67209

or such other address as designated in writing.

10. LESSEE'S IDENTITY

LESSEE must be a natural person or an entity, firm, company, corporation, partnership or a joint venture which has substance under State of Kansas Law and a specific legal identity and business purpose as registered with the Secretary of State in the LESSEE's state of business residence.

11. PERMITTED USE OF PREMISES

LESSEE shall have the right of ingress and egress, in common with others for the benefit of its employees, invitees, contractors, agents and representatives, to be exercised in a reasonable manner. This right of ingress and egress is granted for activities incidental or related to LESSEE'S approved activities, and for no other purposes except as may be approved in writing by LESSOR. This right is subject to federal, state and local security and safety requirements and standards. As required by Kansas state statute, it is understood and agreed that the Premises shall be primarily used and occupied for aviation purposes or primarily for purposes incidental or related thereto and the primary purpose shall be for the operation of an aviation insurance brokerage firm.

LESSEE recognizes that other tenants now and hereafter may occupy other portions of the Airport, and that such other tenants shall have the right to use public roadways, streets, ramps, taxiways, runways, access gates, lighting, beacons, navigational aids, or other conveniences for aeronautical operations, and these common facilities are not under an exclusive use lease; and LESSEE shall conduct its operations in such a manner as to not impede access by others to these common facilities, nor in any other way interfere with, nor disrupt the business of other tenants or the quiet enjoyment of their leasehold interests at the Airport.

LESSOR reserves the right to grant and/or permit other parties the right to use any portion of the Airport, except that described in Section 1, Premises, for any permitted purpose, and upon any fair and non-discriminatory terms established by the LESSOR.

LESSEE, its affiliated entities, subsidiaries, employees, agents, representatives, contractors, and subcontractors, will not transact or otherwise engage in any other activities, business, and/or services on or from the Premises, except as described in this Agreement, unless such is provided for by a separate written approval, or amendment to this Agreement, and subject to approval by LESSOR.

The parties acknowledge that this lease is for office space, and does not include airfield access.

12. PROHIBITED USE OF PREMISES

The Premises shall not be used for any purpose not expressly authorized in Section 11, Permitted Use of Premises. The following operations, services and concessions shall be specifically prohibited on or from the Premises or any other location at the Airport:

(a) Commercial catering, restaurant and/or lounge concessions;
(b) Commercial (for hire) ground transportation;
(c) Commercial “paid” parking;
(d) Commercial hotel or lodging;
(e) Commercial outdoor advertising;
(f) Revenue-producing communication systems or systems not directly applicable to LESSEE’s operations on the Premises;
(g) Automobile rental service;
(h) Any activity considered by LESSOR to not be aviation purposes or purposes incidental or related thereto;
(i) Courtesy parking for users of the terminal building.

13. LESSEE'S RIGHTS AND PRIVILEGES

LESSEE shall have the following rights and privileges on the Premises and on the Airport:

(a) The rights to install, operate, repair, and store upon the Premises all personal property and fixtures necessary for the conduct of LESSEE's lawful business.

(b) The right of ingress and egress to and from the Premises, which rights shall extend to LESSEE's invitees, contractors, subcontractors, agents, representatives and employees; subject, however, to all reasonable security regulations;

(c) The right in common with others authorized to do so, to use the common areas of the Airport.

14. LESSOR'S RIGHTS AND PRIVILEGES

LESSOR expressly reserves from the Premises:

(a) Mineral Rights. All gas, oil and mineral rights in and under the soil.

(b) Water Rights. All statutory, exempt, vested, and granted appropriation rights for the use of water, and all rights to request further appropriations for the Premises.

(c) Airspace. A public right of flight through the airspace above the surface of the Premises. This public right of flight will include the right to cause or allow in said airspace, any noise inherent in the operation of any aircraft used for navigation or flight through said airspace or landing at, taking off from, or operation on the Airport. No liability on the part of LESSOR or any Tenant will result from the exercise of this right.

(d) Navigational Aids. The right to install, maintain and modify and/or permit others to install, maintain and modify on the Premises visual and electronic navigational aids.

(e) Entry and Inspection of Premises. The right of LESSOR, its authorized officers, employees, agents, contractors, subcontractors, authorized government agents, or other representatives to enter upon the Premises:

(1) To inspect at reasonable intervals during regular business hours (or any time in case of emergency or lawful investigation) to determine whether LESSEE has complied, and is complying with the terms and conditions of this Agreement;

(2) To inspect Premises, facilities, and equipment for compliance with laws, regulations and/or codes of the federal, state or local government, airport rules and regulations and airport standard operating procedures; and

(3) To construct or erect new facilities, or to perform maintenance, repair, or replacement relating to the Premises or any facility thereon, as may be required and necessary, but LESSOR shall not be obligated to exercise this option.

(f) Radio/Wireless Communication Systems. The right to approve or withhold approval of any use of fixed RF Systems for the transmission of radio frequency signals in/on the Premises.

(g) General Provisions. The right to exercise any and all rights set out in Section 45, General Provisions.

(h) Signage. The right to enter onto the premises for installation, and the right to install any signage on the Premises required by law, order, rule, regulation, Airport Security Program or federal directive.

Provided that exercise by LESSOR of any such reserved rights (a) through (h) shall be without expense to the LESSEE and shall not unreasonably or materially interfere with LESSEE's use of the Premises and shall not delay LESSEE in the exercise of its rights or the performance of its duties hereunder or increase the costs of such performance.

15. NON-INTERFERENCE WITH AIRPORT OPERATIONS

LESSEE covenants and agrees that it shall not allow any condition on the Premises, nor permit the conduct of any activity on such Premises, which shall materially or adversely affect the development, improvement, operation, or maintenance of the Airport or its facilities, nor shall LESSEE use or permit the Premises to be used in any manner which might interfere with the landing and take-off of aircraft from the Airport or otherwise constitute a hazard to the general public, or to LESSOR's tenants or the customers, agents, invitees, contractors, representatives and employees of those tenants.

LESSEE covenants and agrees that it shall not allow any condition on the Premises, nor permit the conduct of any activity on such Premises, which shall materially or adversely affect, infringe upon, block or interrupt the operations and business activity of other airport tenant leaseholds.

16. COOPERATION WITH AIRPORT DEVELOPMENT

LESSEE understands and agrees that LESSOR may pursue Airport development, improvements and maintenance activities from time-to-time that may affect the Premises and other areas of the Airport. LESSEE agrees to work cooperatively and in good faith with the LESSOR and other tenants and contractors in development, improvement and maintenance activities to minimize any disruptions. If requested by the LESSOR, LESSEE shall cooperate with and assist the LESSOR to the greatest extent possible in the development and implementation of any plans, designs, ingress/egress, or transition that may arise in connection with such Airport development, improvement, and maintenance activities. LESSOR may temporarily or permanently close, re-

route, or consent to the closing or re-routing of any method of ingress or egress on the Airport, so long as the means of ingress and egress are reasonably equivalent to current access available to LESSEE. LESSOR may temporarily close the runways, taxiways, ramps or portions thereof for purposes of maintenance, replacement, re-construction or expansion. Provided that exercise by LESSOR of any such Airport development, improvement, or maintenance shall be without expense to the LESSEE and shall not unreasonably or materially interfere with LESSEE's use of the Premises, and shall not delay LESSEE in the exercise of its rights or the performance of its duties hereunder or increase the costs of such performance.

17. FUTURE ALTERATION AND IMPROVEMENT STANDARDS

During the Initial and Option Term of this Agreement, LESSEE may, with prior written approval of LESSOR, and by lease amendment, if appropriate, add to, improve, or alter the Premises subject to all conditions set forth herein. Any such addition or alteration shall be performed in a good and skilled manner in accordance with all applicable governmental regulations, building codes, LESSOR's design and construction standards, Airport Rules and Regulations, Airport Standard Operating Procedures, Airport Security Program, and all other applicable regulations, codes and requirements. Any such addition or alteration must be designed and constructed in a manner that will not weaken or impair the structural strength or reduce the value or functionality of the Premises or existing improvements thereon, or change the purpose for which the building or any part thereof, may be used. It shall be the responsibility of LESSEE, to file all necessary alteration and construction forms with the Director of Airports, as the LESSOR's representative, for submission to the Federal Aviation Administration and/or the Transportation Security Administration for approval.

18. REMOVAL AND DEMOLITION

LESSEE shall not remove or demolish, in whole or in part, any improvements upon the Premises without the prior written consent of the LESSOR, which may, at its discretion, condition such consent upon the obligation of LESSEE replacing the same by a reasonable improvement specified in such consent. LESSEE shall obtain written consent before commencing demolition and restoration. Failure to obtain this consent shall entitle the LESSOR to such compensation as is necessary to restore the affected improvements.

19. TITLE TO FACILITIES, IMPROVEMENTS AND FIXTURES

It is understood and agreed that title to the Premises and to all existing and future structures, facilities, improvements and fixtures shall be, and shall remain, exclusively with LESSOR, the Wichita Airport Authority.

LESSEE shall, without cost to LESSOR, furnish and install all non-attached furniture, movable partitions, decorations, accessories, equipment, and tools necessary to conduct its business, which shall retain status as personal property even though temporarily affixed to the Premises. Title/ownership to non-attached personal property shall remain with LESSEE.

The term "fixtures", whenever used in this Agreement, shall be construed to include all structures and fixed systems and equipment erected or installed upon the Premises, all fencing, grading and pavement, all underground wires, cables, pipes, conduits, tanks, drains and drainages; and all other property of every kind and nature which is permanently affixed to the Premises, except LESSEE's personal property.

All facilities, structures and improvements, and alterations and additions to the Premises, excluding personal property of LESSEE, placed at the expense of LESSEE, shall remain upon and be surrendered with the Premises as a part thereof, on any termination of this Agreement, for any cause, and shall remain the property of the LESSOR.

20. LIENS

LESSEE shall take or cause to be taken all steps that are required or permitted by law in order to avoid the imposition of any lien upon the Premises or any improvements thereon. Should any lien be placed on the Premises or any improvements thereon, LESSEE shall cause to be removed any and all liens of any nature except liens caused or permitted by LESSOR. This obligation includes, but is not limited to, tax liens and liens arising out of or because of any financing, construction or installation performed by or on behalf of LESSEE or any of its contractors or subcontractors upon LESSEE’s Premises or arising out of or because of the performance of any work or labor to it or them at said Premises or the furnishing of any materials to it or them for use at said Premises. Should any such lien be made or filed, LESSEE shall bond against or discharge the same within thirty (30) days after actual notice of the same from any source, whether from LESSOR or otherwise, and provide written proof of discharge or bonding to LESSOR within that time. LESSEE acknowledges that its interest in the Premises is a leasehold, and that notwithstanding its construction of improvements on the Premises, such improvements accrue to the LESSOR and that it has no equity interest in the Premises which can support a mortgage lien. LESSEE may not mortgage or pledge as collateral its leasehold interest herein without the prior

written consent of the LESSOR.

LESSOR may consent, upon LESSEE's written request, to an assignment of rents to a governmentally regulated and insured commercial lender as partial security for financing of LESSEE's activities on the Premises, which assignment is intended to be a present transfer to such lender of all of LESSEE's rights to collect and receive rents and charges from approved users, operators, sublessees and permitees. Lender(s) shall have no rights to assign this Agreement or sublease the Premises without the prior written consent of the LESSOR as required under Section 23, Assignment and Section 24, Subleasing, Permitting and Contracting. Upon LESSEE's written consent LESSOR agrees to give Lender(s) notice of any default or cancellation of the Agreement, and allow Lender(s) the same opportunity as the LESSEE under the Agreement to correct any condition or cure any default. Nothing in this Section is intended to relieve the LESSEE of its obligations under this Agreement.

21. TAXES, LICENSES AND PERMITS

LESSEE shall promptly pay all taxes, excises, license fees and permit fees of whatever nature applicable to its operation or lease of the Premises. LESSEE may elect, however, at its own cost and expense, to contest any such tax, excise, levy, or assessment. LESSEE will keep current all Federal, State or local licenses, operating certificates or permits required for the conduct of its operations. LESSEE represents and warrants to LESSOR that it has obtained all license, franchise, operating certificates or other agreements or permits necessary to operate LESSEE's operation in accordance with the terms of this Agreement, and LESSEE covenants to keep all such licenses, franchises, permits, operating certificates and other agreements in full force and effect during the Term of this Agreement.

LESSEE shall pay all lawful taxes and assessments which, during the term hereof, may become a lien upon or which may be levied by the State, County, City or any other tax levying body, upon the leased Premises or upon any taxable interest of LESSEE acquired in this lease agreement, or any taxable possessory right which LESSEE may have in or to the leased Premises, including any improvements or facilities located on the Premises, as well as LESSEE shall also pay all lawful taxes and assessments on taxable property, real or personal, owned by LESSEE in and about said Premises. Nothing in this Section shall prevent LESSEE from contesting the legality, validity or application of any such tax or assessment to the full extent LESSEE may be lawfully entitled so to do.

22. UTILITIES

LESSEE shall pay all costs for utility services (whether for installation, service, administration, connection, or maintenance thereof) used by LESSEE at or upon the Premises with no responsibility or expense accruing or inuring to LESSOR, including all permits, licenses or authorizations necessary in connection therewith. Such payments by LESSEE shall be made directly to the utility supplier or service provider, except that if such utilities should be supplied by the LESSOR, then in this event, LESSEE will pay those costs to LESSOR within thirty (30) days after receipt of LESSOR'S invoice. LESSOR agrees that any such costs invoiced to LESSEE will be based on the rates charged to LESSOR by utility supplier, plus reasonable capital and administrative recovery costs.

Unless otherwise agreed upon in writing, if LESSEE requires utilities beyond that currently provided or that are available to be extended to the Premises boundary, LESSEE agrees to pay the full cost and expense associated with the upgrade/extension/installation of all such utilities related to its use of the Premises, and to comply with all provisions for maintaining such utilities.

The LESSOR reserves for itself the right to upgrade, extend, install, maintain and repair all utilities and services on or across the Premises, whether or not such services or utilities are for the benefit of LESSEE. The LESSOR shall take all reasonable care and diligence to protect existing improvements and utilities, and shall avoid to the greatest extent possible any unreasonable interference or interruption to LESSEE's operations.

All electrical, data and communications utilities installed or caused to be installed shall be underground, and no utility services or other cables or wires shall be installed on poles or otherwise above ground. Unless otherwise provided in this Agreement, all utilities and conduits or ducts installed by anyone on the Premises shall be considered fixtures as defined under Section 19, Title to Facilities, Improvements and Fixtures, and shall become the owned property of LESSOR. All utility facilities installations shall meet the requirements of Section 17, Future Alteration and Improvement Standards of this Agreement.

Wastes not legally permitted and authorized for disposal into the storm and/or sanitary drainage system shall not be discharged, connected or introduced into storm and/or sanitary drains and the storm and/or sanitary drainage system. LESSEE shall take all reasonable precautions to prevent the discharge of material into any drainage system that would create interference with the flow therein, or that would cause a hazard or unlawful contamination thereto.

23. ASSIGNMENT

With the exception of assignment to a parent or "holding" company or subsidiary, LESSEE shall have no right to assign or delegate any of its rights or duties pursuant to this Agreement without the prior written consent of LESSOR. Any assignment or delegation so made and so permitted shall be subject to all terms, conditions and other provisions of this Agreement. Any attempted assignment or delegation in violation of this provision shall be void and have no force or effect whatsoever.

24. SUBLEASING, PERMITTING AND CONTRACTING

LESSEE shall not sublease, rent or permit any persons, firms or corporations to occupy any part of the Premises, or to provide any type of commercial or non-commercial operation, aviation or otherwise, on the Premises without having first received the prior written consent of LESSOR, granted only under the following conditions:

(a) Any arrangements must be in the form of a written instrument and must be for purposes and uses of the Premises as authorized under this Agreement, and shall be subject to the provisions of this Agreement. LESSEE shall submit a copy of such proposed instrument at the time of requesting consent of LESSOR.

(b) All sublease(s) must comply with Sections 11, 12, 13, and 14 of this Agreement, and will be reviewed for compliance by LESSOR to that end. Any arrangement for the subleasing of space must be in conformance with the use of the Premises outlined in this Agreement, unless expressly approved otherwise in writing by LESSOR.

(c) LESSEE must keep current records on file and available for LESSOR's inspection, that describes the nature and document the legitimacy of the sublessee's business, including all current municipal, state, or local licenses or permits required for the conduct of sublessee's business.

(d) LESSEE hereby agrees that it shall incorporate language acceptable to LESSOR into all of its sublease agreements, placing on any sublessee and that sublessee's affiliated entities, customers, employees, invitees, contractors, and subcontractors similar restrictions, as may be appropriate to its approved uses as those which bind LESSEE and its use of the facility through this Agreement. LESSEE shall also incorporate and make reference to this Agreement, as may be amended from time to time, to ensure sublessee's operations and conduct are subject to and are in compliance with the terms and conditions of this Agreement, as may be amended from time to time. Any sublease agreement shall explicitly state that it is subordinate to this Agreement, and that the sublessee shall never obtain rights in the Premises greater than those held by LESSEE under this Agreement, as amended. Any sublessee shall be specifically subject to eviction from the Premises as a result of termination, cancellation, or expiration of this Agreement, irrespective of sublessee's state of compliance with the terms of its sublease.

(e) LESSEE shall at all times during the term(s) of approved sublease(s), remain responsible to LESSOR for the compliance of its sublessees with the terms and conditions of any approved sublease and with this Agreement. LESSOR may look to LESSEE directly to satisfy any failure of sublessee to comply with these documents.

(f) Consent to one sublease permit or subcontract shall not be deemed consent to any subsequent sublease permit or subcontract. Prior written consent of the LESSOR shall be required for each sublease permit or subcontract executed by the LESSEE.

25. LIABILITY INSURANCE

LESSEE shall procure, maintain and carry, at its sole cost, in accordance with and/or until completion of this Agreement all insurance, as required per the amounts as set forth below. Insurance shall be furnished by a company licensed to do business in Kansas.

Insurance certificates shall be issued on a standard ACORD form and include the NAIC number of the insuring company. Each insurance company's rating, as shown in the latest Best's Key Rating Guide, shall be no less than A-VII, unless otherwise approved by the LESSOR, or from a Workers' Compensation pool approved by the State of Kansas. Insurance certificates must be received and approved by the LESSOR prior to occupancy.

Should any of the policies described in this Section be cancelled before the expiration date thereof, notice will be delivered in accordance with the policy provisions. The LESSOR reserves the right to request and receive for review certified copies of any and all insurance policies to which this Agreement is applicable prior to commencement of work. The failure of LESSOR to reject the LESSEE'S certificate of insurance shall not be deemed to constitute an acceptance by the LESSOR of a deficient certificate of insurance. If the LESSEE fails to procure or maintain any of the specified coverages the LESSOR has the right, but not the obligation, to secure the coverage and charge the cost to the LESSEE along with a twenty percent (20%) administrative fee.

The LESSEE shall be responsible for determining the types and limits of insurance coverage required by any approved SUBLESSEE. At a minimum, such SUBLESSEE shall carry Workers' Compensation, commercial general liability (minimum of $1,000,000 per occurrence) and commercial automobile liability (minimum of $1,000,000 combined single limit). LESSEE shall require in any approved sublease that the Wichita Airport Authority and the City of Wichita shall be added as primary and non-contributory additional insureds on the SUBLESSEE'S commercial general liability policy.

The requirements, procurement and carrying of the required insurance shall not limit any of the LESSEE's obligations or liability under this Agreement or as a matter of law.
Where "minimum limits" of insurance are specified in this Section, such minimum insurance limits are required and considered by LESSOR to be the lowest insured amounts acceptable under this Agreement. The LESSEE is not limited or restricted whatsoever in securing additional insurance coverage and higher insured limits than those specified herein if, at the LESSEES determination and discretion and commensurate with the type of activity and associated business and operational risk, additional coverage and higher limits are necessary and appropriate.

Insurance shall include the following terms, conditions and minimum limits:

a) WORKERS' COMPENSATION

LESSEE shall maintain Workers' Compensation insurance to cover the statutory requirements of the Workers' Compensation laws of the State of Kansas for its operations on the Premises, and when applicable, to Federal Laws and Voluntary Compensation and Employer's Liability (including occupational disease) coverage.

Employers Liability Limits	$500,000/$500,000/$500,000

b) COMMERCIAL AUTOMOBILE LIABILITY

LESSEE shall maintain commercial automobile insurance, including contractual liability coverage. Coverage shall include all owned, non-owned and hired automobiles used in connection with the services or other work performed on the Premises and in conjunction thereof, and shall have minimum bodily injury and property damage limits as outlined herein. An MCS-90 endorsement shall be procured, when applicable.

Combined Single Limit	$500,000 Each Accident

c) COMMERCIAL GENERAL LIABILITY

LESSEE shall maintain Commercial General Liability Insurance on an occurrence form. Coverage shall include on-going operations, product/completed operations (minimum of two years following the project completion) and Personal and Advertising Injury. Minimum limits, as outlined herein, shall be:

General Aggregate (per project)	$1,000,000
Products/Completed Operations	$1,000,000
Personal and Advertising Injury	$500,000

Each Occurrence	$500,000

The Wichita Airport Authority and the City of Wichita shall be added as primary and non-contributory additional insureds.

d) UMBRELLA/EXCESS LIABILITY COVERAGE

The LESSEE shall provide minimum Umbrella/Excess liability limits (excess of Employers Liability, Commercial General Liability and Commercial Automobile Liability) of:

Each Occurrence Limit	$2,000,000
Annual Aggregate Limit	$2,000,000

The Wichita Airport Authority and the City of Wichita shall be added as primary and non-contributory additional insureds covered under this umbrella/excess liability coverage.

BUILDER'S RISK COVERAGE

In the event LESSEE performs any work, repairs or alterations in, on or about the premises; Builder's Risk/Installation Floater insurance on a "Special Form" will be purchased and maintained, in a company of companies with a Best rating of A-IX and licensed in the State of Kansas, basis using a completed value form for full replacement cost covering all work which LESSEE contracts for or performs on the premises. This insurance shall included: (1) LESSOR, City of Wichita, LESSEE's contractor, subcontractors and sub-subcontractors as additional insureds, and (2) mutual release and waiver of subrogation for all parties. This coverage shall be in effect from the date of the construction notice to proceed and/or the issuance of the building permit, whichever is earlier. Coverage will continue until all financial interests cease. The deductibles and coverage sublimits shall be in commercially reasonable amounts.

The Wichita Airport Authority and the City of Wichita shall be added as primary and non-contributory additional insureds.

LESSEE agrees that in the event of future changes in the law or upon notice by the LESSOR, the minimum levels of insurance required by this Section may be increased within the bounds of commercial reasonableness.

LESSEE agrees, prior to the commencement of the Agreement, to provide LESSOR with copies of all policies or certificates evidencing that such insurance are in full force and effect, and stating the terms thereof. This Agreement shall not commence until policies of insurance satisfactory to LESSOR are supplied by LESSEE. LESSEE shall provide LESSOR undated certificates of insurance the earlier of annually, or upon renewal, which certificate shall

demonstrate the coverage required in this Section for the ensuing 12 month period. Failure to maintain satisfactory insurance policies in force shall constitute grounds for cancellation of this Agreement as set forth in Section 29, Cancellation by LESSOR, of this Agreement.

LESSEE shall be solely responsible for obtaining insurance policies that provide coverage for losses of LESSEE-owned property. Authority shall not be required to provide such insurance coverage or be responsible for payment of LESSEE's cost for such insurance.

26. ALL RISK PROPERTY INSURANCE

LESSOR, at its expense, throughout the term of this Agreement, shall cause the structures, facilities, improvements and fixtures on the Premises to be insured against loss or damage by fire or other casualty equal to the full replacement value thereof and by an all risk coverage policy furnished by a company licensed to do business in Kansas. Such policy shall not exclude, or in the alternative, shall carry full coverage endorsements for damage from tornado, hail, flood, and sewer backup. The proceeds of any payments made under such insurance policy or policies shall be used to rehabilitate or reconstruct the insured facilities, subject to the provisions governing damage or destruction found at Section 41, Damage or Destruction.

27. SUBROGATION OF INSURANCE

LESSOR hereby waives any and all rights of recovery against LESSEE for or arising out of damage or destruction of the building, or the demised Premises, or any other property of LESSOR, from causes then included under any of its property insurance policies, to the extent such damage or destruction is covered by the proceeds of such policies, whether or not such damage or destruction shall have been caused by the negligence of LESSEE, its agents, servants or employees or otherwise, but only to the extent that its insurance policies then in force permit such waiver without diminution of LESSOR coverage.

LESSEE hereby waives any and all rights of recovery against LESSOR for or arising out of damage to or destruction of any property of LESSEE from causes then included under any of its property insurance policies, to the extent such damage or destruction is covered by the proceeds of said policies, whether or not such damage or destruction shall have been caused by the negligence of LESSOR, its agents, servants or employees or otherwise, but only to the extent that its insurance policies then in force permit such waiver.

28. LOSS OF PERSONAL PROPERTY

Any personal property of LESSEE or others placed in or upon the Premises shall be at the sole risk of the LESSEE, and LESSOR shall not be responsible or liable for any loss, damage and replacement thereto, regardless of the cause of such loss or damage, and the LESSEE waives all rights of subrogation against recovery from the LESSOR for such loss or damage unless such loss or damage is the result of the LESSOR's negligence.

29. CANCELLATION BY LESSOR

The LESSOR, in addition to any other rights to which it may be entitled by law or otherwise, may cancel this Agreement by giving LESSEE written notice in the event of default by LESSEE under this Agreement continuing for more than sixty (60) days after the LESSEE's receipt of written notice of such event of default and opportunity to cure from the LESSOR, upon or after the happening of any one of the following events:

(a) LESSEE shall file a voluntary petition in bankruptcy or that proceedings in bankruptcy shall be instituted against it and LESSEE is thereafter adjudicated bankrupt pursuant to such proceedings;
(b) A court shall take jurisdiction of LESSEE and its assets pursuant to proceedings brought under the provisions of any Federal reorganization act;
(c) Receiver of LESSEE's assets shall be appointed;
(d) LESSEE shall be divested of its estate herein by other operation of law;
(e) LESSEE shall fail to perform, keep and observe any of the obligations, terms, warranties or conditions contained in this Agreement that on the part of LESSEE are to be performed, kept or observed.

If any such condition or default cannot reasonably be corrected within the 60-day period and LESSEE has demonstrated due diligence with respect to curing said default, then, at the LESSOR's sole discretion, such cure period may be extended for consecutive periods of 30 days, as long as diligent progress is made toward cure, with a reasonably foreseeable resolution date. Under such circumstances, default may be treated as cured until cured. Should diligent progress cease, or the reason for default become apparent as insoluble, then the term shall cease and expire at the end of the 30-day extension then in effect.

Acceptance of rental by LESSOR for any period or periods after a notice of default is issued by LESSOR of any of the obligations, terms, warranties and conditions herein contained to be performed, kept and observed by LESSEE shall not be deemed a waiver of any other right on the part of LESSOR to cancel this Agreement for failure by LESSEE so to perform, keep and

observe any of the obligations, terms, warranties, or conditions hereof to be performed, kept and observed. No waiver of default by LESSOR of any of the obligations, terms, warranties or conditions hereof to be performed, kept and observed by LESSEE, shall be construed to be or act as a waiver of any subsequent default of any of the obligations, terms, warranties or conditions herein contained to be performed, kept and observed by LESSEE.

30. CANCELLATION BY LESSEE

The LESSEE, in addition to any other rights to which it may be entitled by law or otherwise, may cancel this Agreement by giving LESSOR written notice in the event of default by LESSOR under this Agreement continuing for more than sixty (60) days after the LESSOR's receipt of written notice of such event of default and opportunity to cure from the LESSEE, upon or after the happening of any one of the following events:

(a) Issuance by any court of competent jurisdiction of a permanent injunction in any way preventing or restraining the use of the Airport or any major part thereof for Airport purposes and the remaining in full force of such permanent injunction for a period of at least one hundred eighty (180) days.

(b) Inability of the LESSEE to use, for a period in excess of one hundred eighty (180) days, the Airport or any part of the facility because of any law, order, rule, regulation or other action or non-action of the Federal Aviation Administration or any other governmental authority, or because of fire, earthquake, other casualties or acts of God or the public enemy.

(c) LESSOR shall fail to perform, keep and observe any of the obligations, terms, warranties or conditions contained in this Agreement that on the part of LESSOR are to be performed, kept or observed:

i. LESSEE may give LESSOR written notice to correct such condition or cure such default, and if any such condition or default shall continue for sixty (60) days after receipt of such notice by LESSOR, LESSEE may terminate this Agreement and the term hereof shall cease and expire at the end of such sixty (60) days in the same manner and to the same effect as if it were the expiration of the Initial or Option Term, unless such condition or default cannot reasonably be corrected within the 60-day period and LESSOR has demonstrated due diligence with respect to curing said default, then at the LESSEE's sole discretion such cure period may be extended for consecutive periods of 30 days, as long as diligent progress is made toward cure, with a reasonably foreseeable resolution date. Under such circumstances, default may be treated as cured until cured. Should diligent progress cease, or the reason for default become apparent as

insoluble, then the term shall cease and expire at the end of the 30-day extension then in effect;

(d) Assumption by the United States Government or any other authorized agency thereof of the operation, control or use of the Airport and the facility herein described, or of any substantial part or parts thereof in such a manner as to substantially restrict the LESSEE for a period of one hundred eighty (180) days from operating on and within the facility.

(e) In the event of destruction of the facilities, improvements, or the demised Premises as more fully described in Section 41, Damage or Destruction.

31. MAINTENANCE AND REPAIR

LESSOR, at its sole expense, shall be responsible for the following, unless covered by insurance, for provision of the following functions:

(a) Exterior of structures, and all exterior mechanical systems (heating, ventilation and air conditioning, and associated motors, boilers, chillers and ducting). "Exterior of structures" shall include but is not limited to the roofs, exterior facade and siding, exterior walls, gutters, downspouts, and load bearing structures of the buildings;
(b) Parking lot pavement and lighting maintenance and repairs;
(c) Plumbing maintenance and repairs;
(d) Electrical maintenance and repairs;
(e) Outside signs repairs/replacement;
(f) Snow removal;
(g) Lawn care and sprinkler system maintenance and repairs.

LESSOR, at its sole expense, shall provide improvements to the Premises as outlined in Exhibit "B", attached hereto and made a part hereof.

LESSEE, at its sole expense, shall be responsible for the following, unless covered by insurance, for provision of the following functions:

(a) The interior of all structures on the Premises including, but not limited to ballast and light bulb replacement, carpet/tile cleaning, window washing, decorations, equipment and furnishings;
(b) Telephone system, communication and data cables, conduit and accessories for Tenant's use within the Facility;
(c) All janitorial service and daily routine Premises clean-up work to keep the Premises in good and tenantable condition throughout the term of this Agreement;
(d) Trash removal;
(e) Repairs due to negligence of Tenant to the extent not covered by the proceeds of insurance required to be carried by the parties hereunder;

(f) Electrical or plumbing modifications to the Facility which are considered to be improvements as opposed to replacement due to reasonable wear and tear or malfunction;

(g) From time to time and as often as reasonably required by LESSOR and in accordance with state and local fire codes, conduct appropriate tests of all fire monitoring, alarm and extinguishing equipment, systems and apparatus located on the Premises;

(h) LESSEE shall be responsible for the removal and disposal of garbage, debris, contaminants and any other waste material (whether solid or liquid) arising out of its occupancy of the leased Premises or out of its operation. Such removal shall conform to all governmental requirements and regulations as more fully described herein. Such removal and disposal of garbage, debris, contaminants, or other waste material is understood to include routine clean-up of the Premises. LESSEE shall immediately react and take prompt corrective actions to remove and dispose of any paper, garbage and debris on Premises upon demand of LESSOR. LESSEE shall provide, and screen from public view, suitable covered receptacles for all garbage, trash and other refuse. Piling of boxes, cartons, barrels, pallets or other similar items in an unsightly or unsafe manner on or about the Premises is forbidden.

(i) A twelve percent (12%) administrative fee will be charged on any task that is performed by the Airport on behalf of LESSEE. The fee will be applied to the total cost incurred by the LESSOR in performing the task. The fee represents the LESSOR's cost to manage the task including procurement services, approval processes, management staff time, supervision and overhead. It does not include a profit component.

In the event LESSEE shall fail to perform its upkeep, maintenance and repair responsibilities, LESSOR may, but is not obligated to, perform maintenance and make repairs thereon and thereto which it determines to be necessary, charging the same cost to the expense of LESSEE and a twelve percent (12%) administrative fee upon thirty (30) days prior written notice of its intent to do so. In case of emergency action taken in order to protect against personal injury or property damage but not limited to, for which no notice is necessary, LESSOR shall charge the same cost to the expense of LESSEE and a twenty percent (20%) administrative fee.

32. EXTERIOR SIGNS AND ADVERTISING

LESSEE agrees that no signs or advertising material shall be erected on the Premises or on any improvement or facility on the Premises unless the design and layout of such signs and advertising material, together with the materials and method of construction of such signs and advertising material, shall have been approved in advance in writing by LESSOR, which approval shall not be unreasonably withheld or unduly delayed.

LESSEE shall not erect, install, operate, nor cause or permit to be erected, installed, or operated upon any non-leased Premises of the Airport property, any signs, banners, or other similar devices for its own business, or the business of others. This provision shall not have the effect of limiting or restricting LESSEE's right to enter into an agreement with LESSOR'S authorized and permitted marketing, advertising or signage agency for the display of informational, marketing or advertising media at approved designated locations on Airport property.

33. PORTABLE STORAGE CONTAINERS/STRUCTURES

Unless specifically approved in writing, and under conditions specified by LESSOR, LESSEE shall not place or allow to be placed upon Premises, any type of portable storage container, trailer, unit, box, or barrel which is used to store merchandise and/or equipment and supplies outside of an enclosed permanent building or structure, which does not qualify as a building or structure under Title 18 of the Code of the City of Wichita. Unless specifically approved, and under conditions specified by LESSOR, LESSEE shall not place or allow to be placed upon Premises, any type of portable or temporary structure, trailer, mobile home, modular structure or device.

LESSOR will not unreasonably withhold approval of such container(s) and structure(s) if such is of a temporary nature for the purpose of supporting construction, alteration or improvement activity, or other approved project.

34. GRANTING OF EASEMENTS

LESSEE shall not (i) grant easements, licenses and other rights or privileges in the nature of easements with respect to the land, or (ii) release existing easements, licenses, right-of-ways and other rights or privileges, and LESSEE agrees, to the extent that it may legally do so, that it will execute and deliver any instrument necessary or appropriate to confirm and grant or release any such easement, license, right-of-way or other right or privilege or any such agreement or other arrangement, upon receipt by LESSEE of (a) a copy of the instrument of grant or release or of the agreement or other arrangement, and (b) a written application signed by the LESSOR requesting execution and delivery of such instrument, provided that, such grant or release is not detrimental to the proper conduct of the business of LESSEE, and such grant or release will not impair the effective use or interfere with the efficient and economical operation of the facilities. LESSEE shall not request any payment or other consideration for such execution, the same being amply supported by the promises exchanged in this Agreement. Any payments or other consideration received by LESSOR for any such grant or with respect to or under any such agreement or other arrangement shall be and remain the property of LESSOR. The obligations of this Section shall

survive termination of this Agreement.

35. RULES AND REGULATIONS

LESSEE, its agents and employees, shall be subject to any and all applicable rules, regulations, Airport Standard Operating Procedures, orders and restrictions which are now in force or which may hereafter be adopted by the Wichita Airport Authority or the City of Wichita, Kansas, in respect to the operation of the Airport; and shall also be subject to any and all applicable laws, statutes, rules, regulations or orders of any governmental authority, federal or state, lawfully exercising authority over the Wichita Mid-Continent Airport or LESSEE's operations conducted hereunder.

LESSOR shall not be liable to LESSEE for any diminution or deprivation of its rights hereunder on account of the exercise of any such authority as in this Section provided, nor shall LESSEE be entitled to terminate this Agreement by reason thereof unless exercise of such authority shall so interfere with LESSEE's exercise of the rights hereunder as to constitute a termination of this Agreement by operation of law in accordance with the laws of the State of Kansas, or as set out in Section 30, Cancellation By Lessee.

36. ENCROACHERS, TRESSPASSERS AND OTHER THIRD PARTY HAZARDS

LESSEE shall lawfully remove, or cause to be removed by LESSOR or other official law enforcement agency, all encroachers, trespassers and other third parties violating laws of the federal, state or local government, or who are not on the Premises for legitimate purposes.

37. FIRE EQUIPMENT AND SYSTEMS

LESSOR shall furnish and maintain on the Premises sufficient smoke detectors, portable fire extinguishing equipment and sufficient fire suppression as maybe required by city code and insurance underwriters.

38. ENVIRONMENTAL COVENANTS

(a) The LESSEE hereby covenants that it will not cause or permit any Hazardous Substances to be placed, held, located, or disposed of, on, under or at the Premises, other than in the ordinary course of business and in compliance with all applicable laws.

(b) In furtherance and not in limitation of any indemnity elsewhere provided in this Agreement to the LESSOR , the LESSEE hereby agrees to indemnify and hold harmless the LESSOR and the City of Wichita from and against any and all losses, liabilities, including strict liability, damages, injuries, expenses, including reasonable attorneys' fees, costs of any settlement or judgment and claims of any and every kind whatsoever paid, incurred or suffered by, or asserted against, the LESSOR or the City of Wichita by any person or entity for or arising out of the presence on or under, or the escape, seepage, leakage, spillage, discharge, emission, discharging or release from the Premises during any term of this lease of any Substance (hazardous or otherwise) regulated by any applicable statute, law, ordinance, code, rule, regulation, order or decree regulating, relating to or imposing liability, including strict liability, or standards of conduct concerning, any Hazardous Substance (including, without limitation, any losses, liabilities, reasonable attorneys' fees, costs of any settlement or judgment or claims asserted or arising under the Comprehensive Environmental Response, Compensation and Liability Act, any federal, state or local so-called "Superfund" or "Super lien" laws), if such presence, escape, seepage, leakage, spillage, discharge, emission was caused by the LESSEE, or persons within the control of the LESSEE, its officers, employees, agents, contractors, invitees and/or licensees, or if such Substance (hazardous or otherwise) was owned by, or located on the Premises by, the LESSEE (without regard to the actual cause of any escape, seepage, leakage, spillage, discharge, emission or release).

(c) If, during the term of this Agreement, the LESSEE receives any notice of (i) the happening of any event involving the use (other than in the ordinary course of business and in compliance with all applicable laws), spill, release, leak, seepage, discharge or cleanup of any Substance (hazardous or otherwise) on the Premises or in connection with the LESSEE's operations thereon or (ii) any complaint, order, citation or notice with regard to air emissions, water discharges, or any other environmental, health, or safety matter affecting the LESSEE from any persons or entity (including, without limitation, the United States Environmental Protection Agency (the "EPA") or the Kansas Department of Health and Environment ("KDHE")), the LESSEE shall immediately notify the LESSOR in writing of said notice.

(d) The LESSOR shall have the right, but not the obligation, and without limitation of the LESSOR's other rights under this Agreement, to enter the Premises or to take such other actions as deemed necessary or advisable to inspect, clean up, remove, resolve or minimize the impact of, or to otherwise deal with, any Substance (hazardous or otherwise) or environmental complaint following receipt of any notice from any person, including, without limitation, the EPA or KDHE, asserting the existence of any Substance (hazardous or otherwise) or an environmental complaint pertaining to the Premises or any part thereof which, if true, could result in an order, suit or other action against the LESSEE and/or which, in the reasonable judgment of the LESSOR, could jeopardize its interests under this Agreement. If such conditions are caused by circumstances within the control of the LESSEE or if such circumstances result from a Substance (hazardous or otherwise) owned by, or located on the Premises by, the LESSEE (without regard to the actual cause of any escape, seepage, leakage, spillage, discharge, emission or release) all

reasonable costs and expenses incurred by the LESSOR in the exercise of any such rights shall be payable by the LESSEE, within 15 days of written demand by Landlord.

(e) If an event of default shall have occurred and be continuing, the LESSEE at the request of the LESSOR shall periodically perform, at the LESSEE's expense, an environmental audit and, if reasonably deemed necessary by the LESSOR, an environmental risk assessment, of the Premises, or the hazardous waste management practices and/or hazardous waste disposal sites used by the LESSEE with respect to the Premises. Such audits and/or risk assessments shall be conducted by an environmental consultant satisfactory to the LESSOR, and all environmental audits and environmental risk assessments must be reasonable satisfactory to the LESSOR. Should the LESSEE fail to perform any such environmental audit or risk assessment within 90 days of the written request of the LESSOR, the LESSOR shall have the right, but not the obligation, to retain an environmental consultant to perform any such environmental audit or risk assessment. All costs and expenses incurred by the LESSOR in the exercise of such rights shall be payable by the LESSEE on demand.

(f) Neither LESSEE nor LESSOR shall install or permit to be installed in the Premises friable asbestos, electrical equipment containing polychlorinated biphenyls (PCBs), or any Substance containing asbestos and deemed hazardous by federal or state regulations applicable to the Premises and respecting such material. The LESSEE shall defend, indemnify, and save the LESSOR and the City of Wichita harmless from all costs and expenses (including consequential damages) asserted or proven against the LESSEE by any person, as a result of the presence of said Substances, and the costs of any removal or compliance with such regulations, if said Substance was installed by the LESSEE, or persons within its control.

(g) Subject to any limitations or restrictions imposed by the Kansas Budget Law or Cash Basis Law, the LESSOR hereby agrees to indemnify and hold harmless the LESSEE from and against any and all losses, liabilities, including strict liability, damages, injuries, expenses, including reasonable attorneys' fees, costs of any settlement or judgment and claims of any and every kind whatsoever paid, incurred or suffered by, or asserted against, the LESSEE by any person or entity for, arising out of, the presence on or under, or the escape, seepage, leakage, spillage, discharge, emission, discharging or release from the Premises during the term of this Agreement and the period prior to the term of this Agreement of any Substance (hazardous or otherwise) (including, without limitation, any losses, liabilities, reasonable attorneys' fees, costs of any settlement or judgment or claims asserted or arising under the Comprehensive Environmental Response, Compensation and Liability Act, any federal, state or local so-called "Superfund" or "Super lien" laws, or any other applicable statute, law, ordinance, code, rule, regulation, order of decree regulating, relating to or imposing liability, including strict liability, or standards of conduct concerning any Hazardous Substance) unless such presence, escape, seepage, leakage, spillage, discharge, emission or release was caused by the LESSEE, or persons within the control of the LESSEE, its officers, employees, agents, invitees and/or licensees, or if such Substance (hazardous or otherwise) was owned by, or placed upon the Premises by, the

LESSEE (without regard to the actual cause of any escape, seepage, leakage, spillage, discharge, emission or release except to the extent such was caused by the LESSOR).
Environmental compliance shall not be limited to those items noted within this lease but shall include any current or future federal, state, or local law, statute or regulation, that may be required of LESSEE's operation (storage or use of Substances (hazardous or otherwise), activities of LESSEE's employees or contracted vendor's etc.). Tenant shall provide LESSOR upon request copies of any plan, training program, training records, material safety data sheet or any other documentation required by said laws.

(h) The provisions of this article shall survive the termination of this Agreement.

39. IMPOSITIONS

LESSEE shall, during the life of this Agreement, bear, pay and discharge, before the delinquency thereof, any and all impositions, including all lawful taxes and assessments imposed on the Premises, personal property thereon, or LESSEE's possessory right therein. In the event any impositions may be lawfully paid in installments, LESSEE shall be required to pay only such installments thereof as become due and payable during the life of this Agreement as and when the same become due and payable. LESSOR covenants that without LESSEE's written consent it will not, unless required by law, take any action intended to cause or induce the levying or assessment of any imposition (other than special assessments levied on account of special benefits or other impositions for benefits or services uniformly imposed) which LESSEE would be required to pay under this Section and that should any such levy or assessment be threatened or occur LESSOR shall, at LESSEE's request, fully cooperate with LESSEE in all reasonable ways to prevent any such levy or assessment. Nothing herein contained shall prevent LESSEE from contesting the legality, validity, or application of any such tax or assessment to the full extent LESSEE may be lawfully entitled to do so.

40. INDEMNITY

LESSEE, shall protect, defend and hold LESSOR and the City of Wichita and its officers, agents and employees completely harmless from and against any and all liabilities, losses, suits, claims, judgments, fines or demands arising by reason of injury or death of any person or damage to any property, including all reasonable costs for investigation and defense thereof (including but not limited to attorney fees, court cost and expert fees), of any nature whatsoever arising out of or incident to this Agreement and/or the use or occupancy of the Premises or the acts or omissions of LESSEE's officers, agents, employees, contractors, subcontractors, licensees or invitees, regardless of where the injury, death or damage may occur, except to the extent such injury, death or damage is caused by the negligence of LESSOR. The LESSOR shall give to LESSEE

reasonable notice of any such claims or actions.

LESSOR shall protect, defend and hold LESSEE, its officers, agents and employees completely harmless from and against all liabilities, losses, suits, claims, judgments, fines or demands arising by reason of injury to or death of any person or damage to any property, including all reasonable costs for investigation and defense thereof (including but not limited to attorney fees, court costs and expert fees), of any nature whatsoever arising out of or incident to this agreement and/or the use or occupancy of the Premises or the acts of omissions of LESSOR's officers, agents, employees, contractors, subcontractors, licensees or invitees, regardless of where the injury, death or damage is caused by the negligence of LESSEE. The LESSEE shall give LESSOR reasonable notice of any such claims or actions.

The provisions of this Section shall survive the expiration or termination of this Agreement to the extent that they relate to liabilities, losses, suits, claims, judgments, fines or demands arising from or incident to events occurring during LESSEE'S occupancy of the Premises. The LESSEE shall use counsel reasonably acceptable to LESSOR in carrying out its obligations in this Section.

41. DAMAGE OR DESTRUCTION

In the event that facilities or improvements on the Premises are damaged or destroyed in whole or in part by fire, lightning or any other peril or other casualty during the term of this Agreement, this Agreement shall remain in full force and effect and LESSOR shall proceed with due diligence to repair, restore, rebuild or replace said damaged or destroyed property or parts thereof to as good a condition as all affected properties were in immediately prior to such damage or destruction, subject to such alterations as the parties may agree.

In the event the improvements are damaged or destroyed in whole or in part by fire, lightning or any other peril or casualty not resulting in whole or in part from the actions of the LESSEE during the term of this Agreement, and such damage, destruction or loss exceeds fifty five percent (55%) of the value of the property as it existed prior to the casualty loss, LESSEE shall have the election, indicated by written notice given to LESSOR within 180 days after the occurrence of such event, not to repair, restore, rebuild or replace the improvements. Upon such election by LESSEE, this Agreement shall be terminated effective as of the date such notice is given by LESSEE, and neither party shall have any further rights or obligations pursuant to this Agreement other than LESSEE'S obligation to satisfy damages arising from any negligent or intentional action of itself, its employees, agents or invitees to the extent not covered by insurance proceeds. All of the insurance proceeds shall be paid to LESSEE and LESSOR in pro-rata distributions as their interests may appear based upon the fair market value of each party's interest at the time the proceeds are received. Where allowed by the insurance policy, insurance

proceeds shall first be applied to removal of damaged improvements from the Premises before such distribution.

42. CONDEMNATION

If, during the term, title to, or the temporary use of, all or any part of the Premises shall be condemned by any authority exercising the power of eminent domain, LESSEE shall, within fifteen (15) days after the date of entry of a final order in any eminent domain proceedings granting condemnation, notify LESSOR in writing as to the nature and extent of such condemnation and whether it is practicable for LESSEE to acquire or construct substitute improvements, or whether LESSEE shall elect to terminate this lease.
If LESSEE shall determine that such substitution is practicable and desirable and LESSOR shall agree thereto, LESSEE shall forthwith proceed with and complete with reasonable dispatch the acquisition or construction of such substitute improvements. In such case, any net proceeds received from any award or awards with respect to the Premises or any part thereof made in such condemnation or eminent domain proceeds shall be used and applied for the purpose of paying the cost of such substitution. Any proceeds not required for such costs shall be distributed to the parties in pro-rata distributions as their interests may appear based upon Agreement term remaining and the fair market value of each party's interest at the time the proceeds are received.

If LESSEE shall determine that it is not practicable and desirable to acquire or construct substitute improvements, any net proceeds shall be distributed to the parties in pro-rata distributions as their interests may appear based upon the Agreement term remaining, and the fair market value of each party's interest at the time the proceeds are received.

LESSOR shall cooperate fully with LESSEE in the handling and conduct of any prospective or pending condemnation proceedings with respect to the Premises or any part thereof. In no event will LESSEE or LESSOR voluntarily settle or consent to the settlement of any prospective or pending condemnation proceedings with respect to the Premises without the mutual agreement and written consent of the other party to this Agreement.

43. MODIFICATIONS FOR GRANTING FAA FUNDS

In the event that the LESSOR determines the Federal Aviation Administration requirements call for modifications or changes to this Agreement as a condition precedent to granting of funds for the improvement of the Airport, these modifications or changes shall supersede this Agreement and LESSEE agrees to consent to such amendments, modifications, revisions, supplements or deletions of any of the terms, conditions or requirements of this Agreement as may be reasonably required by the LESSOR to fully comply with federal grant assurances and directives and to

obtain Federal Aviation Administration grants-in-aid, provided that no such changes shall materially alter the rights or obligations of LESSEE hereunder.

44. NONDISCRIMINATION

The LESSEE agrees that it will not discriminate or permit discrimination against any person on the basis of race, color, sex, religion, disability, age (except where age is a bona fide occupational qualification), national origin or ancestry in its operations or services, and its use or occupancy of property under this Agreement. The LESSEE agrees to comply with all applicable provisions of federal and state laws, regulations, or executive orders prohibiting discriminatory conduct.

45. GENERAL PROVISIONS

Facility Development. LESSOR reserves the right to further develop or improve the landing area or any other area, building or other improvement within the present or future boundaries of Airport as it sees fit in its sole judgment regardless of the desires or view of LESSEE and without interference or hindrance by LESSEE. Further, LESSOR retains the absolute right to maintain, repair, develop and expand or replace the terminal building, utilities, ramps, taxiways, runways, streets, roadways, sidewalks, any other airport facility, airport improvement or airport property free from any and all liability to LESSEE for loss of business or damage of any nature whatsoever as may be occasioned during or because of the performance of such maintenance, repair, development, expansion or replacement.

Maintenance, Repair, Direction and Control. LESSOR reserves the right, but is not obligated to exercise the right, to maintain and keep in repair the landing area of the Airport and all publicly owned facilities of the Airport. These areas will include, but are not limited to, those areas which are necessary to serve the aeronautical users of the Airport, except that LESSOR will not be obligated to maintain and keep in repair such areas of the Airport as may be leased to or under the control of Airport tenants, whether such area serves aeronautical users or otherwise.

Operation of Airport by the United States of America. This Agreement and all the provisions hereof will be subject to whatever right the United States of America now has or in the future may have or acquire, affecting the control, operation, regulation and taking over of said Airport or the exclusive or nonexclusive use of the Airport by the United States during the time of war or national emergency.

14 CFR Part 77 of Federal Aviation Regulations. LESSEE agrees to comply with the notification and review requirements covered in Part 77 of the Federal Aviation Regulations in the event future construction of a building, structure, or attachment thereto is planned for the

Premises, or in the event of any planned modification or alteration of any present or future building or structure situated on the Premises. LESSEE by accepting this Agreement expressly agrees for itself, its successors and assigns, that it will not erect nor permit the erection of any structure or object, nor permit the growth of any tree on the Premises which will exceed such maximum height as may be stipulated by LESSOR. It is understood and agreed that applicable laws, codes, regulations or agreements concerning height restrictions will govern the maximum height to be stipulated by LESSOR. In the event the aforesaid covenants are breached, LESSOR reserves the right to enter upon the Premises and to remove the offending structure or object, and cut down the offending tree, all of which will be at the expense of LESSEE and without liability to LESSOR.

Airspace. There is hereby reserved to LESSOR, its successors and assigns, for the use and benefit of the public, a right of flight for the passage of aircraft in the airspace above the surface of the Premises. This public right of flight will include the right to cause or allow in said airspace, any noise inherent in the operation of any aircraft used for navigation or flight through the said airspace or landing at, taking off from or operation on the Airport. No liability on the part of LESSOR will result from the exercise of this right.

Easement for Flight. LESSEE releases LESSOR from any present or future liability whatsoever and covenants not to sue LESSOR for damages or any other relief based directly or indirectly upon noise, light, vibrations, smoke, fumes, odors, air currents, electronic or other emissions occurring as a result of aviation or airport related operations at or otherwise associated with the Airport. This release and covenant includes but is not limited to claims for damages for physical or emotional injuries, discomfort, inconvenience, property damage, death, interference with use and enjoyment of property, nuisance, or inverse condemnation or for injunctive or other extraordinary or equitable relief. It is further agreed that LESSOR shall have no duty to avoid or mitigate such damages by, without limitation, setting aside or condemning buffer lands, rerouting air traffic, erecting sound or other barriers, establishing curfews, noise or other regulations, relocating airport facilities or operations or taking other measures, except to the extent, if any, that such actions are validly required by government authority. LESSOR reserves these rights from the Premises an easement for flight of aircraft in or adjacent to the airspace above the Premises and for the existence and imposition over, on and upon said Premises of noise, light, vibrations, smoke, fumes, odors, air currents, electronic or other emissions, discomfort, inconvenience, interference with use and enjoyment, and any consequent reduction in market value which may occur directly or indirectly as a result of aviation, airport or airport-related operations at or otherwise associated with use of the Airport. LESSEE accepts the Premises subject to the risks and activities hereinabove described.

Airport Hazards. LESSEE by accepting this Agreement agrees for itself, its successors and assignees, that it will not make use of the leased Premises in any manner which might interfere

with the landing and taking off of aircraft from the Airport or otherwise constitute a hazard. In the event this Agreement term is breached, LESSOR reserves the right to enter upon the Premises and cause the abatement of such interference at the expense of LESSEE without liability to LESSOR of any kind.

Airport Rules and Regulations, Policies, and Standard Operating Procedures. LESSOR will have the right to adopt, amend and enforce reasonable airport rules and regulations, policies and standard operating procedures with respect to use of and the conduct and operation of the Airport, its buildings and facilities or any improvements within the present or future boundaries of the Airport, which LESSEE agrees to observe and obey.

Federal Aviation Administration Requirements. LESSOR and LESSEE agree that the requirements of the Federal Aviation Administration (FAA) set out below are approved by both parties, and if applicable, LESSEE agrees to comply with all FAA requirements with respect to its operations, use of the Airport and this Agreement:

(a) The LESSEE, for itself and its representatives, successors in interest and assigns, as a part of the consideration hereof, does hereby covenant and agree as a covenant running with the land that in the event facilities are constructed, maintained or otherwise operated on said property described in this Agreement for a purpose for which a Department of Transportation program or activity is extended or for another purpose involving the provision of similar services or benefits, the LESSEE shall maintain and operate such facilities and services in compliance with all other requirements imposed pursuant to 49 CFR Part 21, Nondiscrimination in Federally Assisted Programs of the Department of Transportation, and as said Regulations may be amended.

(b) The LESSEE, for itself and its representatives, successors in interest and assigns, as a part of the consideration hereof, does hereby covenant and agree as a covenant running with the land that: (1) no person on the grounds of race, color, or national origin shall be excluded from participation in, denied the benefits of, or be otherwise subjected to discrimination in the use of said facilities, (2) that in the construction of any improvements on, over, or under such land and the furnishing of services thereon, no person on the grounds of race, color, or national origin shall be excluded from participation in, denied the benefits of, or otherwise be subjected to discrimination, (3) that the LESSEE shall use the Premises in compliance with all other requirements imposed by or pursuant to 49 CFR Part 21, Nondiscrimination in Federally Assisted Programs of the Department of Transportation, and as said Regulations may be amended.

(c) The LESSEE assures that it will undertake an affirmative action program if required by 14 CFR Part 152, Subpart E, to insure that no person shall on the grounds of race, creed, color, national origin, or sex be excluded from participating in any employment activities covered in 14 CFR Part 152, Subpart E. The LESSEE assures that no person shall be excluded on these grounds from participating in or receiving the services or benefits of any program or

activity covered by this subpart. The LESSEE assures that it will require that its covered suborganizations provide assurances to the LESSEE that they similarly will undertake affirmative action programs, and that they will require assurances from their suborganizations, as required by 14 CFR Part 152, Subpart E, to the same effect.

(d) It is understood and agreed that nothing herein contained shall be construed to grant or authorize the granting of an exclusive right within the meaning of Section 308 of the Federal Aviation Act of 1958.

(e) LESSEE agrees to furnish service on a fair, equal and not unjustly discriminatory basis to all users thereof, and to charge fair, reasonable and not unjustly discriminatory prices for each unit or service; PROVIDED, that LESSEE may make reasonable and nondiscriminatory discounts, rebates or other similar types of price reductions to volume purchasers.

(f) LESSOR reserves the right (but shall not be obligated to LESSEE) to maintain and keep in repair the landing area of the airport and all publicly-owned facilities of the airport, together with the right to direct and control all activities of LESSEE in this regard.

(g) LESSOR reserves the right further to develop or improve the landing area and all publicly-owned air navigation facilities of the airport as it sees fit, regardless of the desires or views of LESSEE, and without interference or hindrance.

(h) LESSOR reserves the right to take any action it considers necessary to protect the aerial approaches of the airport against obstruction, together with the right to prevent LESSEE from erecting, or permitting to be erected, any building or other structure on the airport which, in the opinion of LESSOR, would limit the usefulness of the airport or constitute a hazard to aircraft.

(i) During time of war or national emergency LESSOR shall have the right to enter into an agreement with the United States Government for military or naval use of part or all of the landing area, the publicly-owned air navigation facilities and/or other areas or facilities of the airport. If any such agreement is executed, the provisions of this instrument, insofar as they are inconsistent with the provisions of the agreement with the Government, shall be suspended.

(j) It is understood and agreed that the rights granted by this agreement will not be exercised in such a way as to interfere with or adversely affect the use, operation, maintenance or development of the airport.

(k) There is hereby reserved to LESSOR, its successors and assigns, for the use and benefit of the public, a free and unrestricted right of flight for the passage of aircraft in the air space above the surface of the Premises herein conveyed, together with the right to cause in said airspace such noise as may be inherent in the operation of aircraft now known or hereafter used for navigation of or flight in the air, using said airspace or landing at, taking off from or operating on or about the airport.

(l) This Agreement shall become subordinate to provisions of any existing or future agreement between the LESSOR and the United States of America or any agency thereof relative to the operation, development or maintenance of the airport, the execution of which has been or may be required as a condition precedent to the expenditure of federal funds for the development

of the Airport.

Subordination to Agreements with the U.S. Government. This Agreement is subject and subordinate to the provisions of any agreements heretofore or hereafter made between LESSOR and the United States Government relative to the operation or maintenance of Airport, the execution of which has been required as a condition precedent to the transfer of federal rights or property to LESSOR for Airport purposes, or the expenditure of federal funds for the improvement or development of Airport, including the expenditure of federal funds for the development of Airport in accordance with the provisions of the Federal Aviation Act of 1958, as it has been amended from time to time. LESSOR covenants that it has no existing agreements with the United States Government in conflict with the express provisions hereof.

Non-Waiver of Rights. No waiver or default by either party of any of the terms, warranties, covenants and conditions hereof to be performed, kept and observed by the other party shall be construed as, or shall operate as, a waiver of any subsequent default of any of the terms, warranties, covenants or conditions herein contained, to be performed, kept and observed by the other party.

Notices. Notices required herein may be given by registered, certified, or express mail, and shall be deemed served on the date such notice is deposited in the United States Mail, or by prepaid private courier in the continental United States. Either party shall have the right, by giving written notice to the other, to change the address at which its notices are to be received.

Until any such change is made, notices to LESSOR shall be delivered as follows:

Wichita Airport Authority
Wichita Mid-Continent Airport
2173 Air Cargo Road
Wichita, Kansas 67209

Until any such change is made, notices to LESSEE shall be delivered as follows:

Attn: Janet Bressler AOPA Insurance Agency, Inc. 1995 Midfield Road Wichita, KS 67209	***And***	Attn: Roger Myers AOPA Insurance Agency, Inc. 421 Aviation Way Frederick, MD 21701

Captions. The captions/headings of the Sections of this Agreement are inserted only as a matter of convenience and for reference, and in no way define, limit or describe the scope or intent of any provisions of this Agreement, and shall not be construed to affect in any manner the terms

and provisions hereof or the interpretation or construction thereof.

Severability and Invalid Provisions. In the event any term, covenant, condition or provision herein contained is held to be invalid by any court of competent jurisdiction, the invalidity of any such term, covenant, condition or provision shall in no way affect any other term, covenant, condition or provision herein contained; provided, however, that the invalidity of any such term, covenant, condition or provision does not materially prejudice either the LESSOR or the LESSEE in their respective rights and obligations contained in the valid terms, covenants, conditions or provisions in this agreement.

Waiver of Claims. Each party hereby waives any claim against the other and its officers or employees for loss of anticipated profits, consequential or incidental damages, or claim for attorney fees caused by or resulting any suit or proceedings directly or indirectly attacking the validity of Agreement or any part thereof, or the manner in which it is executed or performed, or by any judgment or award in any legal proceeding declaring this Agreement null, void or voidable, or delaying the same of any part thereof, from being carried out. This waiver extends to all claims, whether the supporting legal theory lies in common law or has a statutory basis.

Incorporation of Exhibits. All exhibits referred to in this Agreement are intended to be and are hereby specifically made a part of this Agreement.

Incorporation of Required Provisions. The parties incorporate in this Agreement by this reference all provisions lawfully required to be contained herein by any governmental body or agency.

Non-Liability of Agents and Employees. No member, officer, agent or employee of either party to this Agreement shall be charged personally, or held contractually liable by or to the other party under the terms or provisions of this Agreement, or because of any breach thereof or because of its or their execution or attempted execution.

Successors and Assigns Bound. This Agreement shall be binding upon and inure to the benefit of the successors and assigns of the parties hereto where permitted by this Agreement.

Time of Essence. Time is of the essence in this Agreement.

Relationship of the Parties. It is understood LESSEE is not in any way or for any purpose a partner or joint venturer with or an agent of LESSOR. LESSEE shall act as an independent contractor in the performance of its duties pursuant to this Agreement.

Interpretation. LESSOR and LESSEE hereby agree that this Agreement shall not be construed or interpreted in favor of either party on the basis of preparation.

Kansas Laws to Govern. This Agreement and the terms and conditions herein contained shall at all times be governed, interpreted and construed under and in accordance with the laws of the State of Kansas, and venue for resolution of any issue pertaining to this Agreement shall be in Sedgwick County, Kansas.

46. THIRD PARTY RIGHTS

It is agreed between the parties that it is not intended by any of the provisions of this Agreement to create for the public or any member thereof the status of a third-party beneficiary, or to authorize anyone not a party to this Agreement to maintain a suit for damages pursuant to the terms or provisions of this Agreement.

47. QUIET ENJOYMENT

LESSOR agrees that, on payment of the rentals and fees and performance of the terms, covenants, conditions and agreements on the part of LESSEE to be performed in this Agreement, LESSEE will have the right to peaceably occupy and enjoy the Premises, subject however, to the GENERAL PROVISIONS contained in Section 45.

48. HOLD OVER

In the event LESSEE holds over the lease of the Premises, any rights granted after expiration of this Agreement without any written renewal of it shall not be deemed to operate as a renewal or extension of this Agreement, but shall only create a month-to-month arrangement, which may be terminated within thirty (30) days notice by LESSOR or LESSEE.

49. SURRENDER OF POSSESSION AND RESTORATION

LESSEE shall yield and deliver to LESSOR possession of the Premises at the expiration or termination of this Agreement in good condition in accordance with LESSEE's obligations in this Agreement, except for reasonable wear and tear, or fire or other casualty for which full insurance compensation has been paid as agreed. LESSEE shall, at its expense, deliver the Premises in good order and condition, including: (1) cleaning and hauling away all supplies and trash; (2) removing by legal means all materials and Substances classified as hazardous; (3) leaving in operating condition all bulbs and ballasts; (4) replacing all broken glass, (5) remove all computer network cable installed for or on behalf of the LESSEE, and (6) return to LESSOR all keys to all doors and gates.

LESSEE, at LESSEE's expense, shall remove during the Term of the Agreement or at its expiration all non-attached equipment and personal property placed by LESSEE on or about the Premises herein leased, subject to LESSEE's repairing any damage thereto caused by such removal and subject to any valid lien which LESSOR may have on that property for unpaid rents, expenses or fees.

In the event LESSEE does not remove all of its equipment and personal property within thirty (30) calendar days after the termination of this Agreement, any remaining property shall be considered abandoned and LESSOR may dispose of said property without any further responsibility or liability to LESSEE. The net disposal costs of such property shall be the financial obligation of LESSEE.

50. INTENTION OF PARTIES

This Agreement is intended solely for the benefit of LESSOR and LESSEE and is not intended to benefit, either directly or indirectly, any third party or member(s) of the public at large. Any work done or inspection of the Premises performed by LESSOR is solely for the benefit of LESSOR and LESSEE.

Nothing contained herein shall be deemed or construed by the parties hereto, or by any third party, as creating the relationship of principal and agent, partners, joint ventures, or any other similar such relationship, between the parties hereto. Further, non-parties to this Agreement may not maintain a suit for personal injuries or property damage pursuant to the terms or provisions of the Agreement. The parties shall understand and agree that neither the method of payment, nor any other provision contained herein, nor any act(s) of the parties hereto creates a relationship other than the relationship of the LESSOR and the LESSEE.

51. ENTIRE AGREEMENT

The parties understand and agree that this instrument contains the entire Agreement between them. The parties hereto further understand and agree that the other party and its agents have made no representations or promises with respect to the Agreement or the making or entry into this Agreement, except as expressed in this Agreement, and that no claim or liability or cause for termination shall be asserted by either party against the other and such party shall not be liable by reason of, the making of any representations or promises not expressly stated in this Agreement, any other written or oral agreement with the other being expressly waived.

The individuals executing this Agreement personally warrant that they have full authority to execute this Agreement on behalf of the entity for which they are acting herein.

The parties hereto acknowledge that they have thoroughly read this Agreement, including any exhibits or attachments hereto, and have sought and received whatever competent advice and counsel deemed necessary for them to form a full and complete understanding of all rights and obligations herein.

52. AMENDMENT

This Agreement constitutes the entire Agreement between the parties for the lease of Premises set forth and identified under Section 1. No amendment, modification, or alteration of the terms of this Agreement shall be binding unless the same is in writing, dated subsequent to the date hereof, and duly executed by the parties hereto.

53. APPROVAL, CONSENT, DIRECTION OR DESIGNATION BY LESSOR

Wherever under this Agreement, approvals, consents, directions, or designations are required or permitted, such approvals, consents, directions, or designations required or permitted under this Agreement shall be performed by the Director of Airports, or his/her authorized representative. Approvals, consents, directions, or designations made at any time by the Director of Airports, and from time to time, may be withdrawn or modified by notice from LESSOR to LESSEE.

IN WITNESS WHEREOF, the parties hereto have executed this agreement the day and year first above written.

ATTEST:

THE WICHITA AIRPORT AUTHORITY
WICHITA, KANSAS

By _____
Karen Sublett, City Clerk

By _____
Carl Brewer, President
"LESSOR"

By _____
Victor D. White, Director of Airports

ATTEST:

AOPA INSURANCE AGENCY, INC.

By _____

By _____
"LESSEE"

APPROVED AS TO FORM: _____ Date: _____
Director of Law

EXHIBIT A

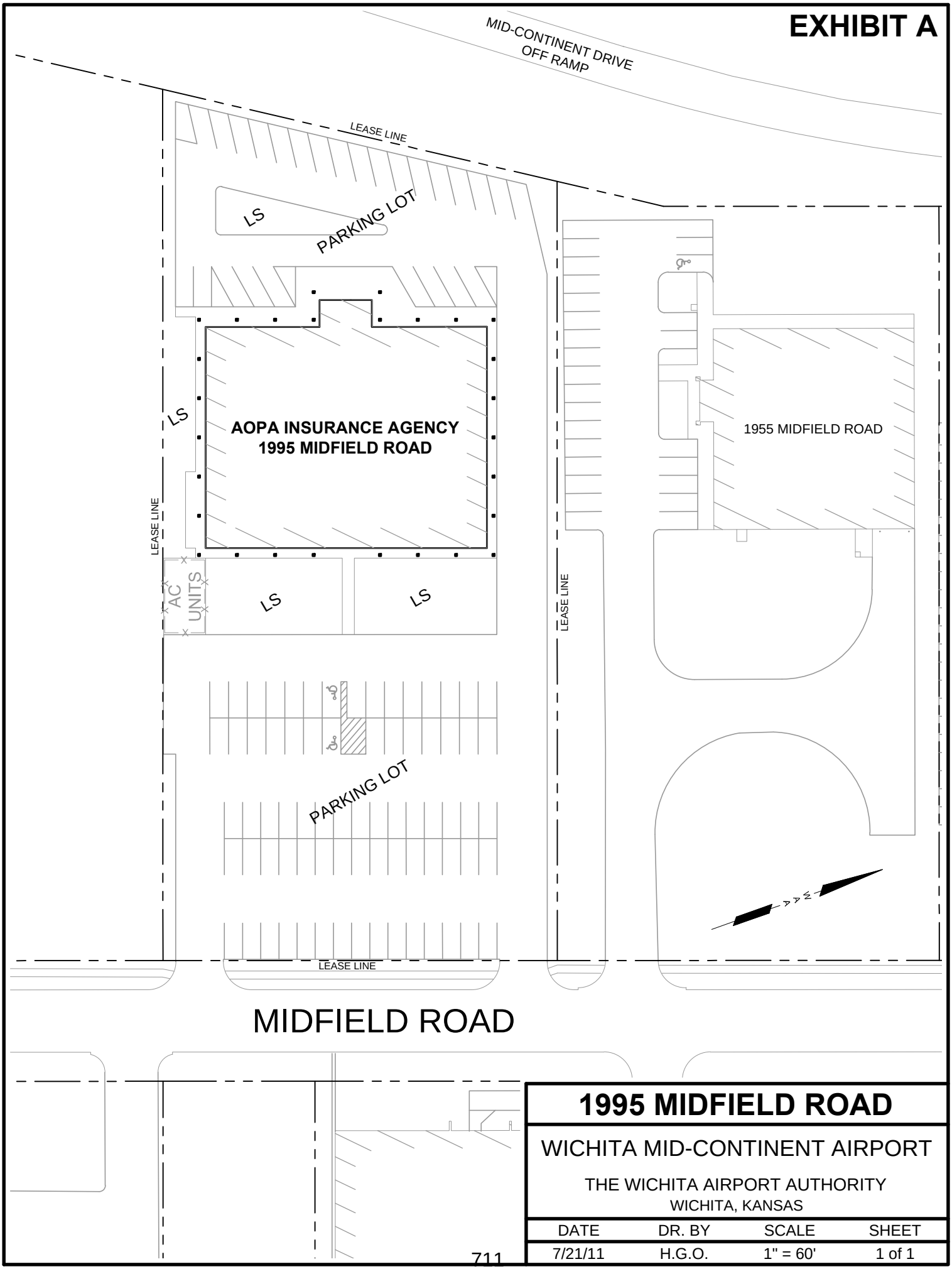

1995 MIDFIELD ROAD

WICHITA MID-CONTINENT AIRPORT

THE WICHITA AIRPORT AUTHORITY
WICHITA, KANSAS

DATE	DR. BY	SCALE	SHEET
7/21/11	H.G.O.	1" = 60'	1 of 1

D:\Drawings\216-Buildings\MidField Road\1995 MF-RD\Floor Plan.dwg, Site, 7/21/2011 3:00:23 PM

EXHIBIT "B"

FACILITY IMPROVEMENTS
1995 Midfield Road
Wichita, Kansas

LESSOR will incorporate into its capital improvement program and maintenance planning, at its sole expense, replacement of the HVAC system; weatherization of the exterior windows; repair and paint soffit; remove existing exterior signage and install new signage; remove wallpaper and paint the interior walls; replace the carpet and tile; and replace stove. Scheduling and implementation of these improvements are understood by both parties to be subject to the legislative approval of the LESSOR.